YA
Series

Product Lineup

The YA series does not comply with the EU RoHS directive.

ARTICULATED ROBOTS

Ideal for compact cell construction, transport and assembly of small parts, and inspection work.

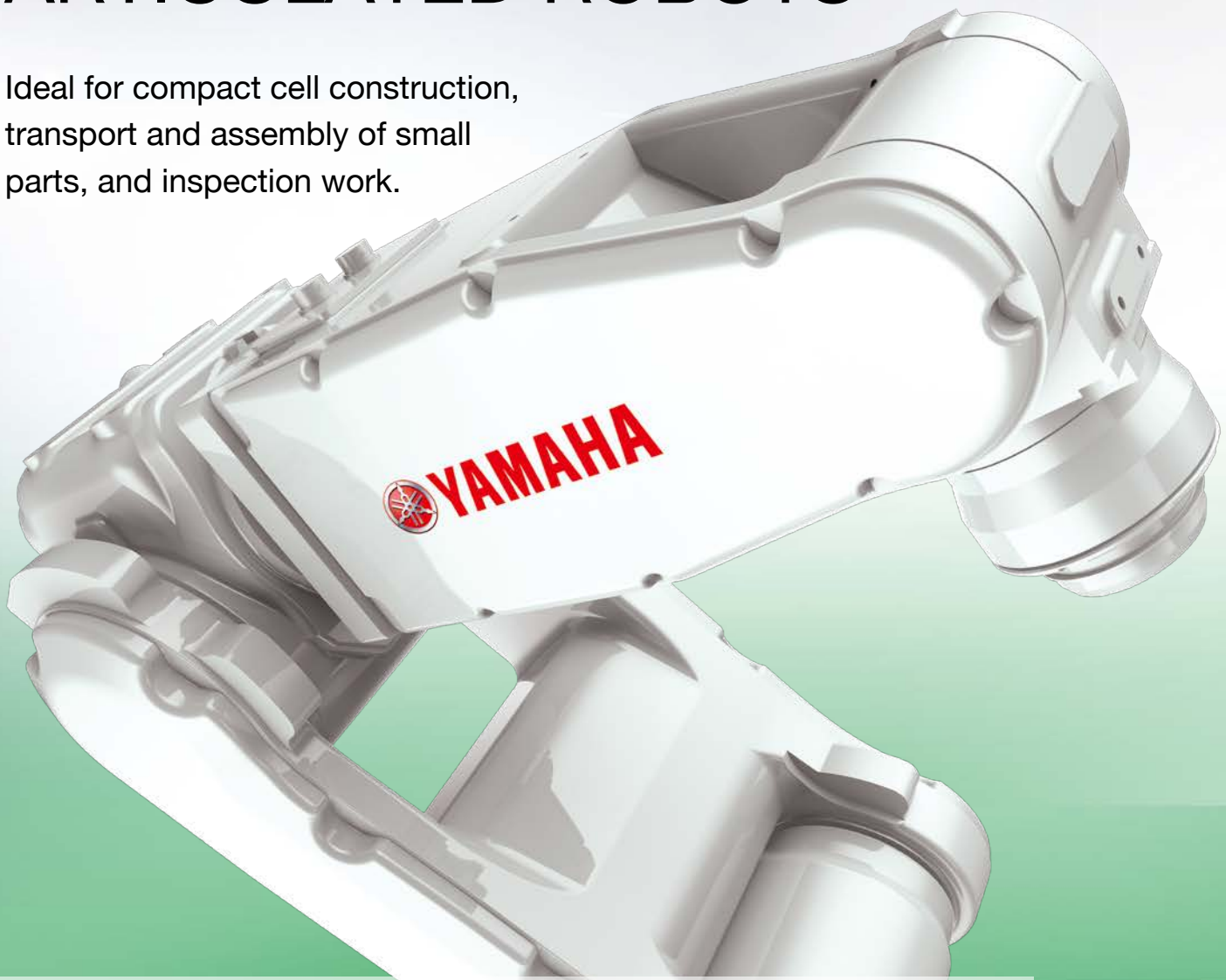

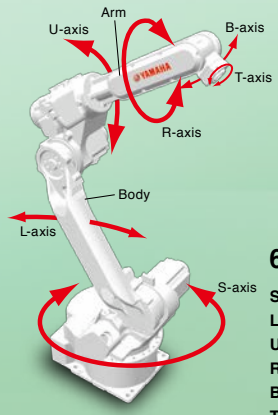

6-axis robots

S-axis: Rotate the body horizontally
L-axis: Move the body forward/backward
U-axis: Move the arm up/down
R-axis: Rotate the arm
B-axis: Move the tip of the arm up/down
T-axis: Rotate the tip of the arm

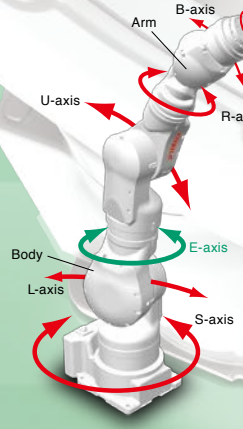

7-axis robots

S-axis: Rotate the body horizontally
L-axis: Move the body forward/backward
E-axis: Twist the arm
U-axis: Move the arm up/down
R-axis: Rotate the arm
B-axis: Move the tip of the arm up/down
T-axis: Rotate the tip of the arm

Reduce personnel, increase productivity

6-axis

7-axis

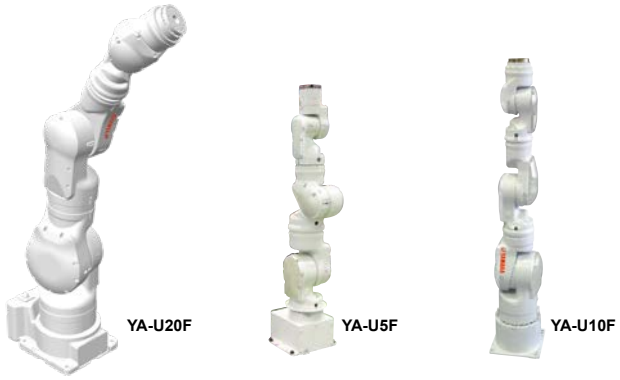

Type	Model	Application	Number of axes	Payload (kg)	Vertical reach (mm)	Horizontal reach (mm)	Page
6-axis	YA-RJ	Handling (general)	6-axis	1 kg (max. 2 kg Note)	909	545	P.149
	YA-R3F			3	804	532	P.150
	YA-R5F			5	1193	706	P.151
	YA-R5LF			5	1560	895	P.152
	YA-R6F			6	2486	1422	P.153
7-axis	YA-U5F	Assembly / Placement	7-axis	5	1007	559	P.154
	YA-U10F			10	1203	720	P.155
	YA-U20F			20	1498	910	P.156

Note. When a load is more than 1 kg, the motion range will be smaller. Use the robot within the recommended motion range.

POINT

High-speed operation reduces cycle time

Thanks to high-speed, low-inertia AC servo motors, an arm designed for light weight, and the latest control technology, these robots achieve an operating speed that is best in their class.From supply, assembly, inspection, and packing to palletization, all applications can enjoy shorter cycle time and improved productivity.

Workpieces with a high wrist load are also supported

With a wrist section that has the highest allowable moment of inertia in its class, these robots can support jobs involving a high wrist load, or simultaneous handling of multiple workpieces.

Robot simulator dramatically reduces startup time

We provide software that lets you use 3D CAD data to construct a production facility in virtual space in a personal computer, and easily perform engineering tasks such creating programs and checking for robot interference. Teaching can be performed even before the actual production line is completed, dramatically reducing line startup time.

Note. Optional support

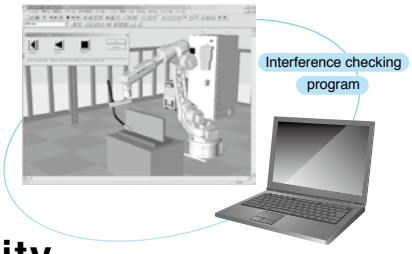

Free arm movement further boosts productivity.

7-axis Reduced space allows sophisticated system layouts

Since these robots can be installed close to workpieces or other equipment, you can reduce the space required for your production facility. By locating multiple robots close to each other, processing can be integrated and shortened.

7-axis Access the workpiece from the opposite side or from below

Rotation of the seventh axis enables flexible movement with the same freedom of motion as a human arm, allowing the workpiece to be accessed from the opposite side or from below. This allows the robot to enter narrow locations that a person could not fit in, or to approach the workpiece in a way that avoids obstructions, giving you more freedom to design the layout for shorter cycle time and reduced space.

7-axis "Elbow movement" unique to 7-axis models allows optimal posture to be maintained

The 7-axis U-type robots allow "elbow movement," changing only the elbow angle without affecting the position or posture of the tool. This permits operation to avoid nearby obstructions.

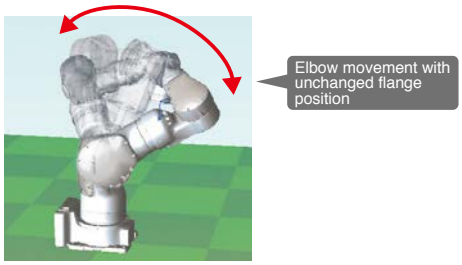

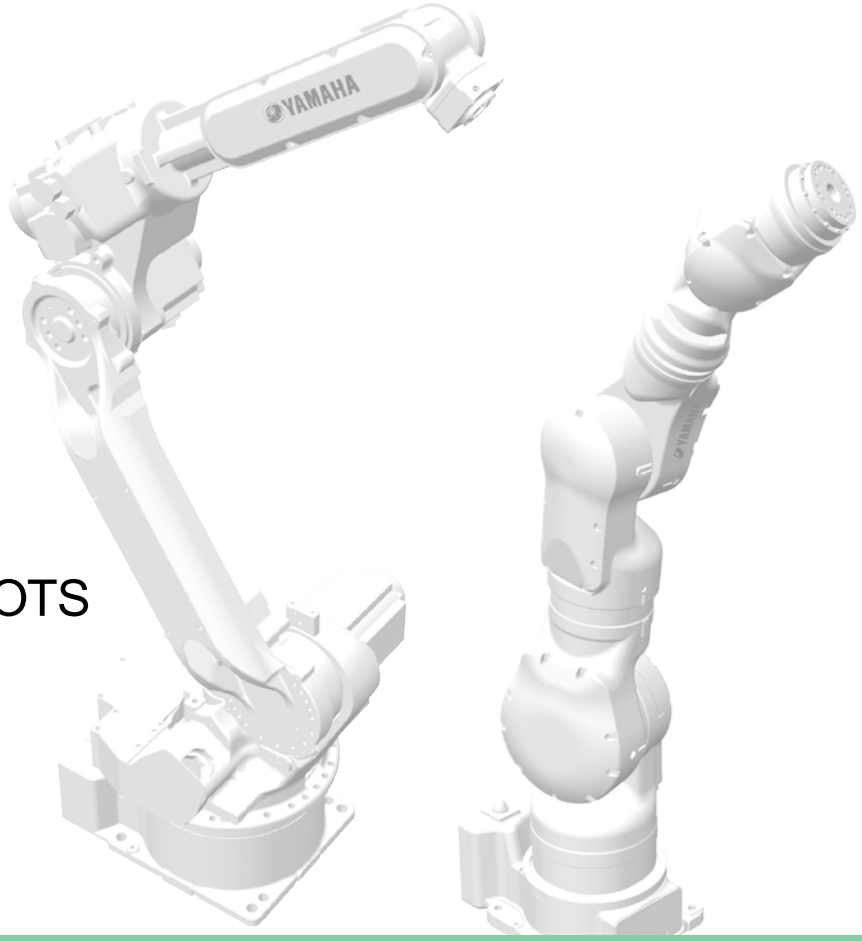

ARTICULATED ROBOTS

YA SERIES

CONTENTS

Main functions ▶ P.10

YA SERIES MANIPULATOR SPECIFICATIONS

		6-axis					7-axis		
Applications		Handling (general)					Assembly / Placement		
		 YA-RJ	 YA-R3F	 YA-R5F	 YA-R5LF	 YA-R6F	 YA-U5F	 YA-U10F	 YA-U20F
Number of axes		6	6	6	6	6	7	7	7
Payload		1 kg (max. 2 kg[Note 2])	3 kg	5 kg	5 kg	6 kg	5 kg	10 kg	20 kg
Vertical reach		909 mm	804 mm	1193 mm	1560 mm	2486 mm	1007 mm	1203 mm	1498 mm
Horizontal reach		545 mm	532 mm	706 mm	895 mm	1422 mm	559 mm	720 mm	910 mm
Repeatability		+/-0.03 mm	+/-0.03 mm	+/-0.02 mm	+/-0.03 mm	+/-0.08 mm	+/-0.06 mm	+/-0.1 mm	+/-0.1 mm
Range of Motion	S-axis (turning)	-160° to +160°	-160° to +160°	-170° to +170°	-170° to +170°	-170° to +170°	-180° to +180°	-180° to +180°	-180° to +180°
	L-axis (lower Arm)	-90° to +110°	-85° to +90°	-65° to +150°	-65° to +150°	-90° to +155°	-110° to +110°	-110° to +110°	-110° to +110°
	E-axis (elbow twist)	-	-	-	-	-	-170° to +170°	-170° to +170°	-170° to +170°
	U-axis (upper arm)	-290° to +105°	-105° to +260°	-136° to +255°	-138° to +255°	-175° to +250°	-90° to +115°	-135° to +135°	-130° to +130°
	R-axis (wrist roll)	-180° to +180°	-170° to +170°	-190° to +190°	-190° to +190°	-180° to +180°	-180° to +180°	-180° to +180°	-180° to +180°
	B-axis (wrist pich/yaw)	-130° to +130°	-120° to +120°	-135° to +135°	-135° to +135°	-45° to +225°	-110° to +110°	-110° to +110°	-110° to +110°
	T-axis (wrist twist)	-360° to +360°	-360° to +360°	-360° to +360°	-360° to +360°	-360° to +360°	-180° to +180°	-180° to +180°	-180° to +180°
Maximum Speed	S-axis (turning)	160°/s	200°/s	376°/s	270°/s	220°/s	200°/s	170°/s	130°/s
	L-axis (lower Arm)	130°/s	150°/s	350°/s	280°/s	200°/s	200°/s	170°/s	130°/s
	E-axis (elbow twist)	-	-	-	-	-	200°/s	170°/s	170°/s
	U-axis (upper arm)	200°/s	190°/s	400°/s	300°/s	220°/s	200°/s	170°/s	170°/s
	R-axis (wrist roll)	300°/s	300°/s	450°/s	450°/s	410°/s	200°/s	200°/s	200°/s
	B-axis (wrist pich/yaw)	400°/s	300°/s	450°/s	450°/s	410°/s	230°/s	200°/s	200°/s
	T-axis (wrist twist)	500°/s	420°/s	720°/s	720°/s	610°/s	350°/s	400°/s	400°/s
Allowable Moment	R-axis (wrist roll)	3.33 N·m	5.39 N·m	12 N·m	12 N·m	11.8 N·m	14.7 N·m	31.4 N·m	58.8 N·m
	B-axis (wrist pich/yaw)	3.33 N·m	5.39 N·m	12 N·m	12 N·m	9.8 N·m	14.7 N·m	31.4 N·m	58.8 N·m
	T-axis (wrist twist)	0.98 N·m	2.94 N·m	7 N·m	7 N·m	5.9 N·m	7.35 N·m	19.6 N·m	29.4 N·m
Allowable Inertia ($GD^2/4$)	R-axis (wrist roll)	0.058 kg·m²	0.1 kg·m²	0.30 kg·m²	0.30 kg·m²	0.27 kg·m²	0.45 kg·m²	1.0 kg·m²	4.0 kg·m²
	B-axis (wrist pich/yaw)	0.058 kg·m²	0.1 kg·m²	0.30 kg·m²	0.30 kg·m²	0.27 kg·m²	0.45 kg·m²	1.0 kg·m²	4.0 kg·m²
	T-axis (wrist twist)	0.005 kg·m²	0.03 kg·m²	0.1 kg·m²	0.1 kg·m²	0.06 kg·m²	0.11 kg·m²	0.4 kg·m²	2.0 kg·m²
Mass		15 kg	27 kg	27 kg	29 kg	130 kg	30 kg	60 kg	120 kg
Power Requirements[Note 1]		0.5 kVA	0.5 kVA	1.0 kVA	1.0 kVA	1.0 kVA	1.0 kVA	1.0 kVA	1.5 kVA
Detailed info page		P.149	P.150	P.151	P.152	P.153	P.154	P.155	P.156

Note 1. Varies in accordance with applications and motion patterns.
Note 2. When a load is more than 1 kg, the motion range will be smaller. Use the robot within the recommended motion range. For details, refer to the dimensional diagram on P.149.

■ YA series basic system contents

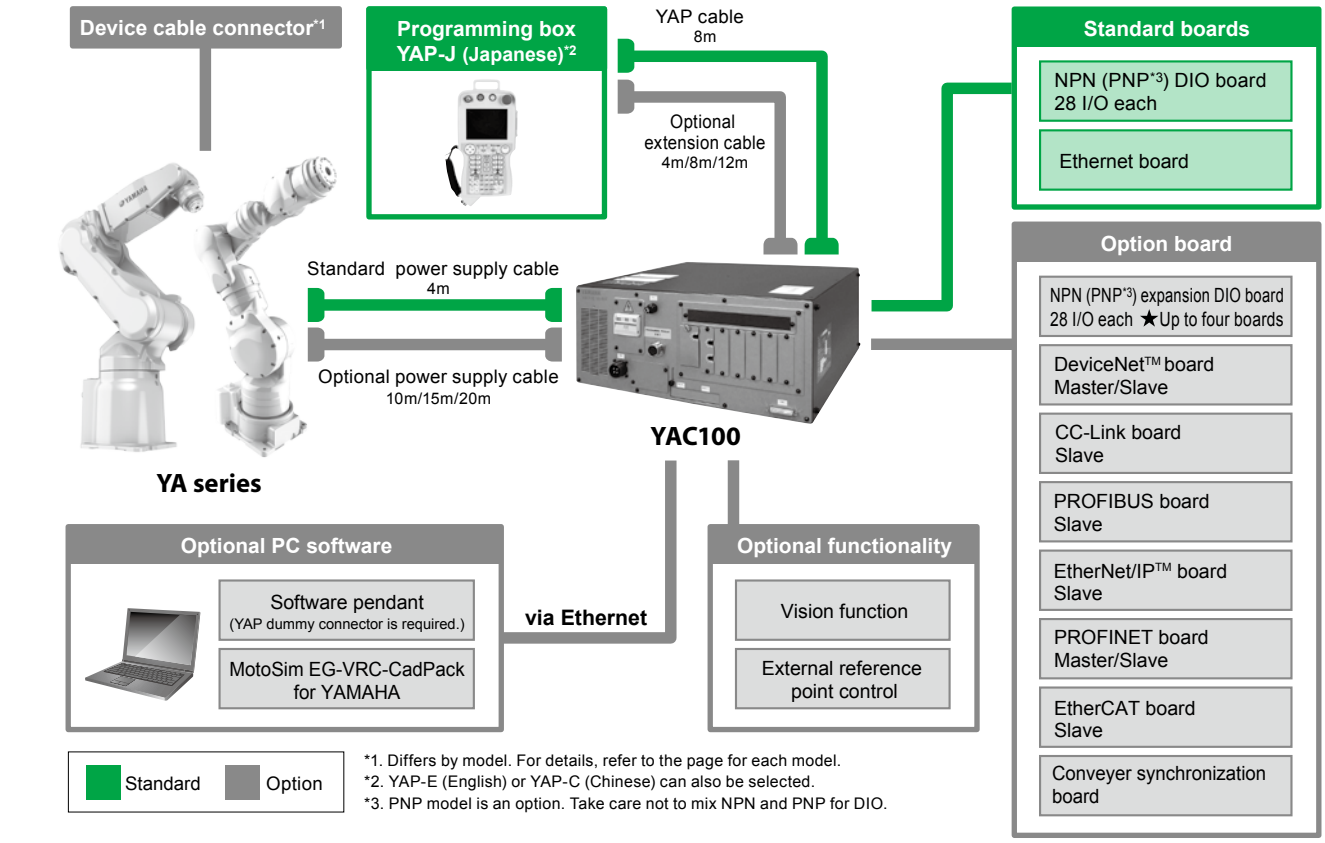

*1. Differs by model. For details, refer to the page for each model.
*2. YAP-E (English) or YAP-C (Chinese) can also be selected.
*3. PNP model is an option. Take care not to mix NPN and PNP for DIO.

YA-RJ

6-axis

- Maximum payload 2 kg
- Longest Reach R545 mm

Note. The YA series does not comply with the EU RoHS directive.

Ordering method

YA-RJ	-	4L	-	YAC100	-	N	-		-		-	
Model	-	Power cable length	-	Controller	-	Safety standard	-	Language setting	-	Option I/O	-	Network option
		4L: 4m				N: Normal		JE: Japanese/English JC: Japanese/Chinese EJ: English/Japanese EC: English/Chinese		N, P: Standard I/O 28/28 N1, P1: 56/56 points N2, P2: 84/84 points N3, P3: 112/112 points N4, P4: 140/140 points		No entry : None CC: CC-Link DM: DeviceNet master DS: DeviceNet slave PB: PROFIBUS EP: EtherNet/IP™ PM: Profinet master PT: Profinet slave ES: EtherCAT slave

Note. This unit is ideal for small tabletop devices or for education.
Note. The ultra-light, compact YA-RJ features portability and easy installation for simplified system integration.
Note. Each axis uses a motor of 80 W or less.
Note. This unit can also be used in combination with a travel axis or other external axis. Please contact us.

Specifications

Controlled Axis		6
Payload		1 kg (max. 2 kg[Note 1])
Repeatability		+/-0.03 mm
Range of Motion	S-axis (turning)	-160° to +160°
	L-axis (lower Arm)	-90° to +110°
	U-axis (upper arm)	-290° to +105°
	R-axis (wrist roll)	-180° to +180°
	B-axis (wrist pich/yaw)	-130° to +130°
	T-axis (wrist twist)	-360° to +360°
Axis with brake[Note 2]		L-axis, U-axis
Maximum Speed	S-axis (turning)	2.79 rad/s, 160°/s
	L-axis (lower Arm)	2.27 rad/s, 130°/s
	U-axis (upper arm)	3.49 rad/s, 200°/s
	R-axis (wrist roll)	5.23 rad/s, 300°/s
	B-axis (wrist pich/yaw)	6.98 rad/s, 400°/s
	T-axis (wrist twist)	8.72 rad/s, 500°/s

Allowable Moment	R-axis (wrist roll)	3.33 N·m
	B-axis (wrist pich/yaw)	3.33 N·m
	T-axis (wrist twist)	0.98 N·m
Allowable Inertia ($GD^2/4$)	R-axis (wrist roll)	0.058 kg·m^2
	B-axis (wrist pich/yaw)	0.058 kg·m^2
	T-axis (wrist twist)	0.005 kg·m^2
Mass		15 kg
Ambient Conditions	Ambient Temperature	During operation: 0 to +40˚C, During storage: -10 to +60˚C
	Relative Humidity	90% max. (non-condensing)
	Vibration Acceleration	4.9 m/s^2 or less
	Others	•Free from corrosive gasses or liquids, or explosive gasses •Free from exposure to water, oil, or dust •Free from excessive electrical noise (plasma)
Power Requirements[Note 3]		0.5 kVA

Note 1. When a load is more than 1 kg, the motion range will be smaller. Use the robot within the recommended motion range. (See diagrams below)
Note 2. The S-, R-, B-, and T-axes do not have any brakes. Make sure that the operation does not require brakes.
Note 3. Varies in accordance with applications and motion patterns.
Note. SI units are used for specifications.

YA-RJ

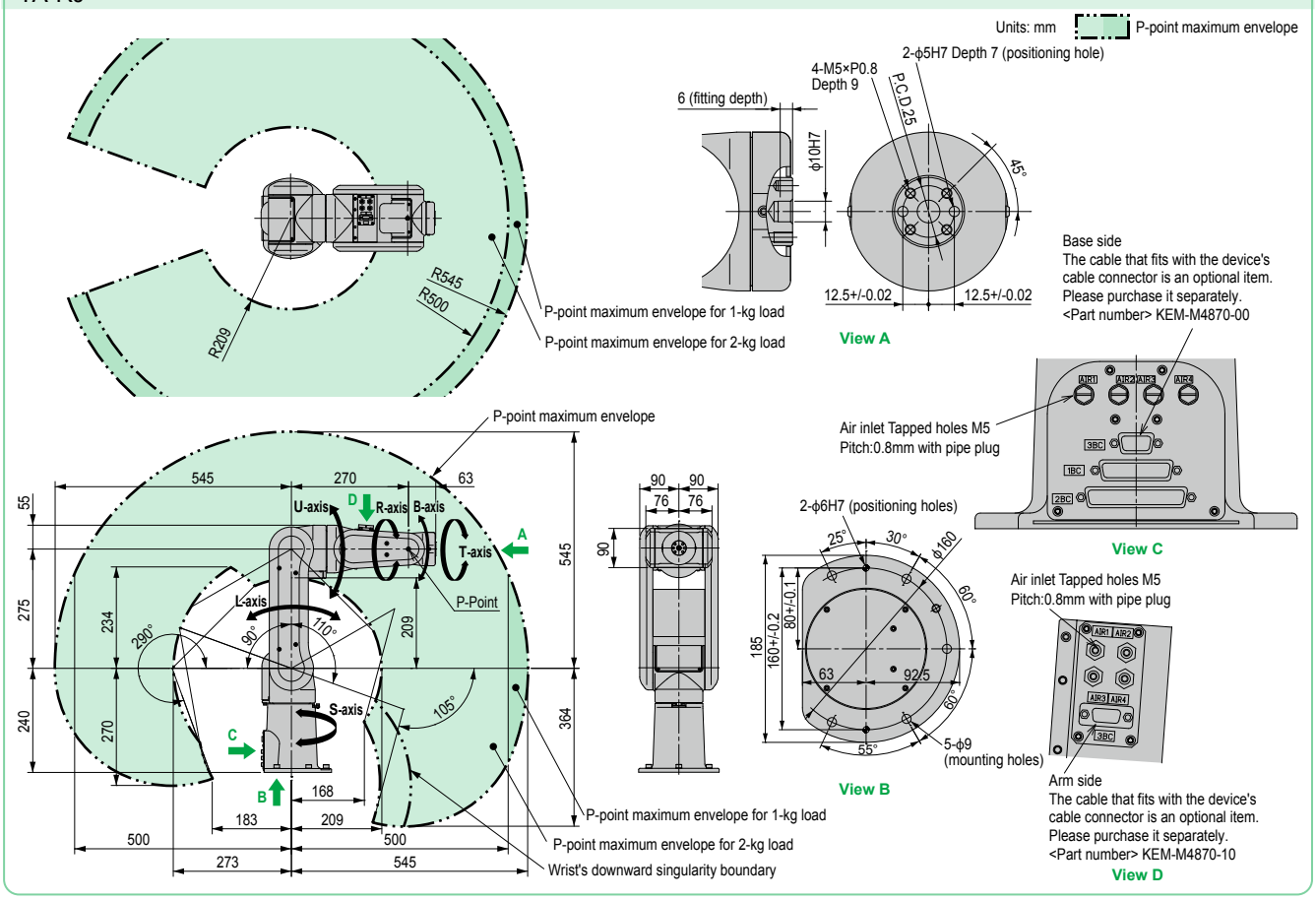

YA-R3F

6-axis

- Maximum payload 3 kg
- Longest Reach R532 mm

Note. The YA series does not comply with the EU RoHS directive.

Ordering method

YA-R3F	-	4L	-	YAC100	-	N	-		-		-	
Model	-	Power cable length	-	Controller	-	Safety standard	-	Language setting	-	Option I/O	-	Network option
		4L: 4m				N: Normal		JE: Japanese/English JC: Japanese/Chinese EJ: English/Japanese EC: English/Chinese		N, P: Standard I/O 28/28 N1, P1: 56/56 points N2, P2: 84/84 points N3, P3: 112/112 points N4, P4: 140/140 points		No entry : None CC: CC-Link DM: DeviceNet master DS: DeviceNet slave PB: PROFIBUS EP: EtherNet/IP™ PM: Profinet master PT: Profinet slave ES: EtherCAT slave

Note. The YA-R3F, a compact manipulator with a motor of 80 W or less mounted on all axes, requires minimal space (baseplate: 240 mm × 170 mm). No fence is required for robot's working area. The robot can be used in applications such as automated guided vehicles (AGVs), testing equipment, and educational tools.
Note. Standard models include four air hoses (diameter: 4 mm), and an internal user I/O wiring harness (0.2 mm² × 10) running through the U-arm. This structure simplifies wiring and tubing for easier system construction.
Note. Floor-mounted, wall-mounted, and ceiling-mounted types are available. Please contact us separately regarding wall-mounted or ceiling-mounted installations.
Note. This unit can also be used in combination with a travel axis or other external axis. Please contact us.

Specifications

Controlled Axis		6
Payload		3 kg
Repeatability		+/-0.03 mm
Range of Motion	S-axis (turning)	-160° to +160° Note 1
	L-axis (lower Arm)	-85° to +90°
	U-axis (upper arm)	-105° to +260°
	R-axis (wrist roll)	-170° to +170°
	B-axis (wrist pich/yaw)	-120° to +120°
	T-axis (wrist twist)	-360° to +360°
Maximum Speed	S-axis (turning)	3.49 rad/s, 200°/s
	L-axis (lower Arm)	2.62 rad/s, 150°/s
	U-axis (upper arm)	3.32 rad/s, 190°/s
	R-axis (wrist roll)	5.24 rad/s, 300°/s
	B-axis (wrist pich/yaw)	5.24 rad/s, 300°/s
	T-axis (wrist twist)	7.33 rad/s, 420°/s

Allowable Moment	R-axis (wrist roll)	5.39 N·m
	B-axis (wrist pich/yaw)	5.39 N·m
	T-axis (wrist twist)	2.94 N·m
Allowable Inertia (GD²/4)	R-axis (wrist roll)	0.1 kg·m²
	B-axis (wrist pich/yaw)	0.1 kg·m²
	T-axis (wrist twist)	0.03 kg·m²
Mass		27 kg
Ambient Conditions	Temperature	0 to +40˚C
	Humidity	20 to 80%RH (non-condensing)
	Vibration	4.9 m/s² or less
	Others	•Free from corrosive gasses or liquids, or explosive gasses •Free from exposure to water, oil, or dust •Free from excessive electrical noise (plasma)
Power Requirements Note 2		0.5 kVA

Note 1. For wall-mounted installation, the S-axis operating range is +/-25°.
Note 2. Varies in accordance with applications and motion patterns.
Note. SI units are used for specifications.

YA-R3F

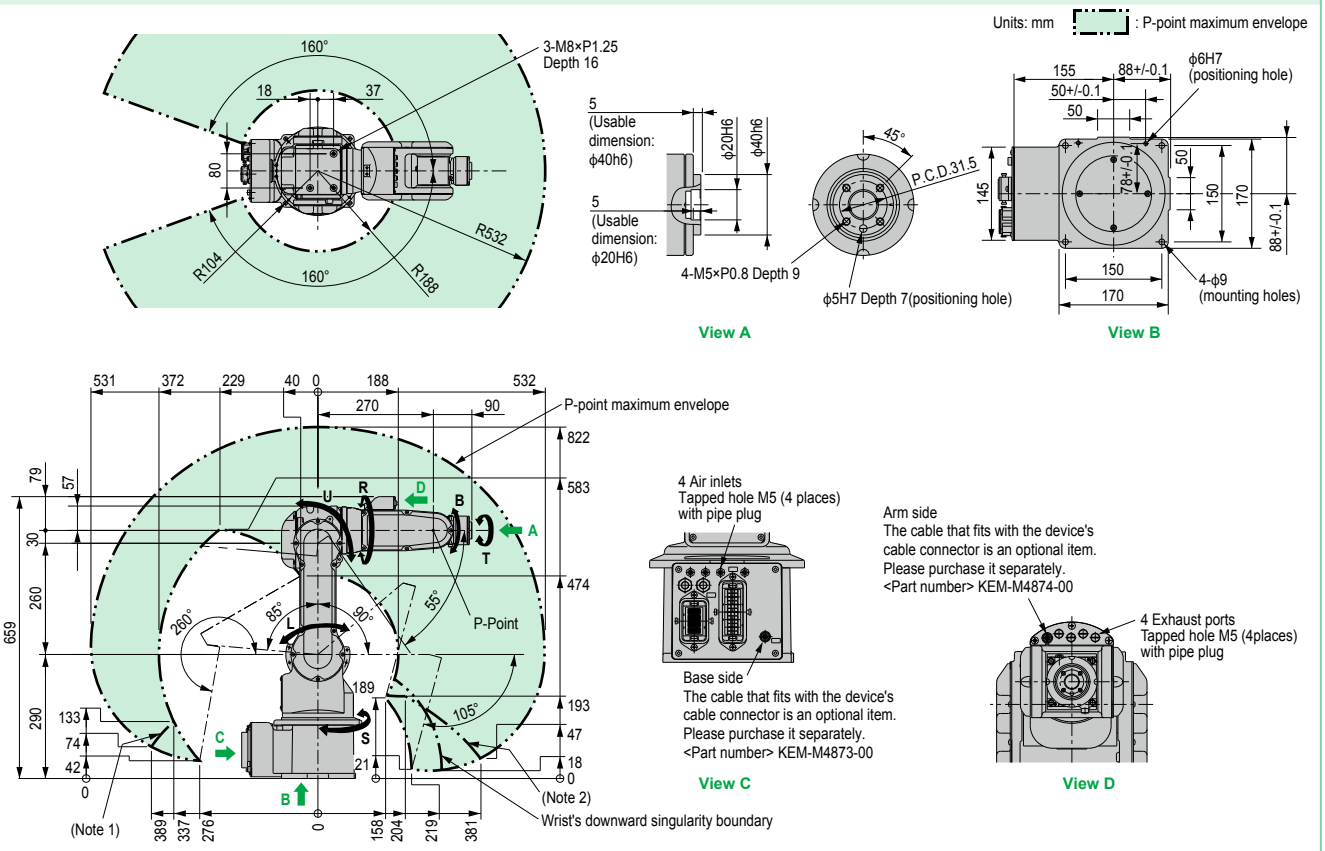

Note 1. Motion range of point P when the S-axis is between -40° to +40°.
Note 2. Motion range of point P when the S-axis is between -125° to -160° or +125° to +160°.

Controller YAC100 ▶ 157

YA-R5F 6-axis

● Maximum payload 5 kg ● Longest Reach R706 mm

Note. The YA series does not comply with the EU RoHS directive.

Ordering method

YA-R5F	-	4L	-	YAC100	-	N	-		-		-	
Model	-	Power cable length	-	Controller	-	Safety standard	-	Language setting	-	Option I/O	-	Network option
		4L: 4m				N: Normal		JE: Japanese/English JC: Japanese/Chinese EJ: English/Japanese EC: English/Chinese		N, P: Standard I/O 28/28 N1, P1: 56/56 points N2, P2: 84/84 points N3, P3: 112/112 points N4, P4: 140/140 points		No entry : None CC: CC-Link DM: DeviceNet master DS: DeviceNet slave PB: PROFIBUS EP: EtherNet/IP™ PM: Profinet master PT: Profinet slave ES: EtherCAT slave

Note. Thanks to the higher control rate of the YAC100 controller and vibration-damping control of the arm, we have reduced the residual vibration when the arm stops moving, while shortening the cycle time and achieving the fastest speed in this class.
Note. Longest reach in a respective class (706 mm)
Note. Floor-mounted, wall-mounted, and ceiling-mounted types are available. Please contact us separately regarding wall-mounted or ceiling-mounted installations.
Note. This unit can also be used in combination with a travel axis or other external axis. Please contact us.

Specifications

Controlled Axis		6
Payload		5 kg
Repeatability		+/-0.02 mm
Range of Motion	S-axis (turning)	-170° to +170° Note 1
	L-axis (lower Arm)	-65° to +150°
	U-axis (upper arm)	-136° to +255°
	R-axis (wrist roll)	-190° to +190°
	B-axis (wrist pich/yaw)	-135° to +135°
	T-axis (wrist twist)	-360° to +360°
Maximum Speed	S-axis (turning)	6.56 rad/s, 376°/s
	L-axis (lower Arm)	6.11 rad/s, 350°/s
	U-axis (upper arm)	6.98 rad/s, 400°/s
	R-axis (wrist roll)	7.85 rad/s, 450°/s
	B-axis (wrist pich/yaw)	7.85 rad/s, 450°/s
	T-axis (wrist twist)	12.57 rad/s, 720°/s

Allowable Moment	R-axis (wrist roll)	12 N·m
	B-axis (wrist pich/yaw)	12 N·m
	T-axis (wrist twist)	7 N·m
Allowable Inertia ($GD^2/4$)	R-axis (wrist roll)	0.3 kg·m^2
	B-axis (wrist pich/yaw)	0.3 kg·m^2
	T-axis (wrist twist)	0.1 kg·m^2
Mass		27 kg
Ambient Conditions	Temperature	0 to +45˚C
	Humidity	20 to 80%RH (non-condensing)
	Vibration	4.9 m/s^2 or less
	Others	•Free from corrosive gasses or liquids, or explosive gasses •Free from exposure to water, oil, or dust •Free from excessive electrical noise (plasma)
Power Requirements Note 2		1.0 kVA

Note 1. For wall-mounted installation, the S-axis operating range is +/-30°.
Note 2. Varies in accordance with applications and motion patterns.
Note. SI units are used for specifications.

YA-R5F

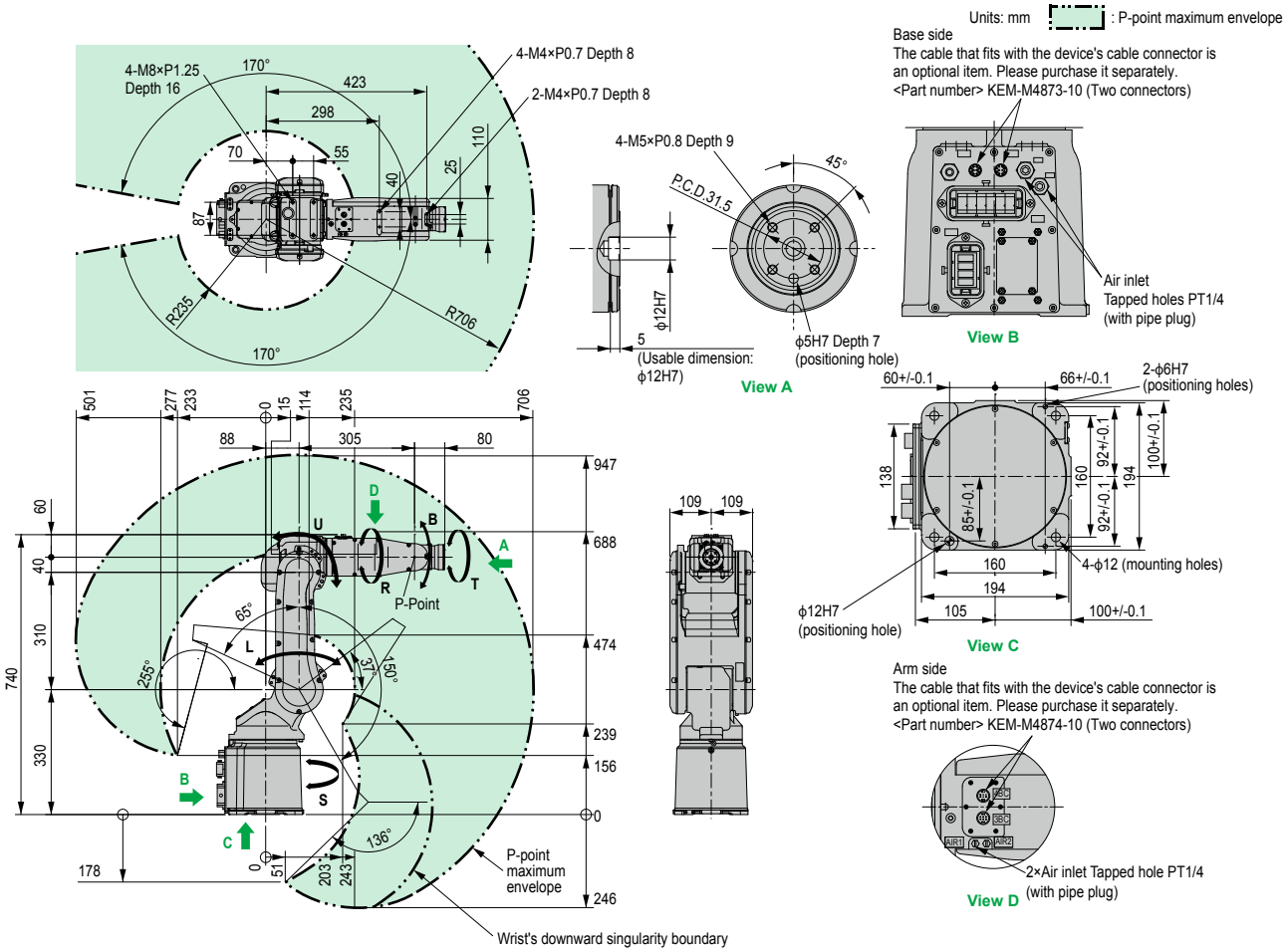

Controller YAC100 ▶ 157

YA-R5LF

6-axis

- Maximum payload 5 kg
- Longest Reach R895 mm

Note. The YA series does not comply with the EU RoHS directive.

Ordering method

YA-R5LF	-	4L	-	YAC100	-	N	-		-		-	
Model	-	Power cable length	-	Controller	-	Safety standard	-	Language setting	-	Option I/O	-	Network option
		4L: 4m				N: Normal		JE: Japanese/English JC: Japanese/Chinese EJ: English/Japanese EC: English/Chinese		N, P: Standard I/O 28/28 N1, P1: 56/56 points N2, P2: 84/84 points N3, P3: 112/112 points N4, P4: 140/140 points		No entry : None CC: CC-Link DM: DeviceNet master DS: DeviceNet slave PB: PROFIBUS EP: EtherNet/IP™ PM: Profinet master PT: Profinet slave ES: EtherCAT slave

Note. Thanks to the higher control rate of the YAC100 controller and vibration-damping control of the arm, we have reduced the residual vibration when the arm stops moving, while shortening the cycle time and achieving the fastest speed in this class.
Note. Longest reach in a respective class (895 mm)
Note. Floor-mounted, wall-mounted, and ceiling-mounted types are available. Please contact us separately regarding wall-mounted or ceiling-mounted installations.
Note. This unit can also be used in combination with a travel axis or other external axis. Please contact us.

Specifications

Controlled Axis		6
Payload		5 kg
Repeatability		+/-0.03 mm
Range of Motion	S-axis (turning)	-170° to +170° Note 1
	L-axis (lower Arm)	-65° to +150°
	U-axis (upper arm)	-138° to +255°
	R-axis (wrist roll)	-190° to +190°
	B-axis (wrist pich/yaw)	-135° to +135°
	T-axis (wrist twist)	-360° to +360°
Maximum Speed	S-axis (turning)	4.71 rad/s, 270°/s
	L-axis (lower Arm)	4.89 rad/s, 280°/s
	U-axis (upper arm)	5.24 rad/s, 300°/s
	R-axis (wrist roll)	7.85 rad/s, 450°/s
	B-axis (wrist pich/yaw)	7.85 rad/s, 450°/s
	T-axis (wrist twist)	12.57 rad/s, 720°/s

Allowable Moment	R-axis (wrist roll)	12 N·m
	B-axis (wrist pich/yaw)	12 N·m
	T-axis (wrist twist)	7 N·m
Allowable Inertia ($GD^2/4$)	R-axis (wrist roll)	0.3 kg·m²
	B-axis (wrist pich/yaw)	0.3 kg·m²
	T-axis (wrist twist)	0.1 kg·m²
Mass		29 kg
Ambient Conditions	Temperature	0 to +45˚C
	Humidity	20 to 80%RH (non-condensing)
	Vibration	4.9 m/s² or less
	Others	•Free from corrosive gasses or liquids, or explosive gasses •Free from exposure to water, oil, or dust •Free from excessive electrical noise (plasma)
Power Requirements Note 2		1.0 kVA

Note 1. For wall-mounted installation, the S-axis operating range is +/-30°.
Note 2. Varies in accordance with applications and motion patterns.
Note. SI units are used for specifications.

YA-R5LF

Units: mm : P-point maximum envelope

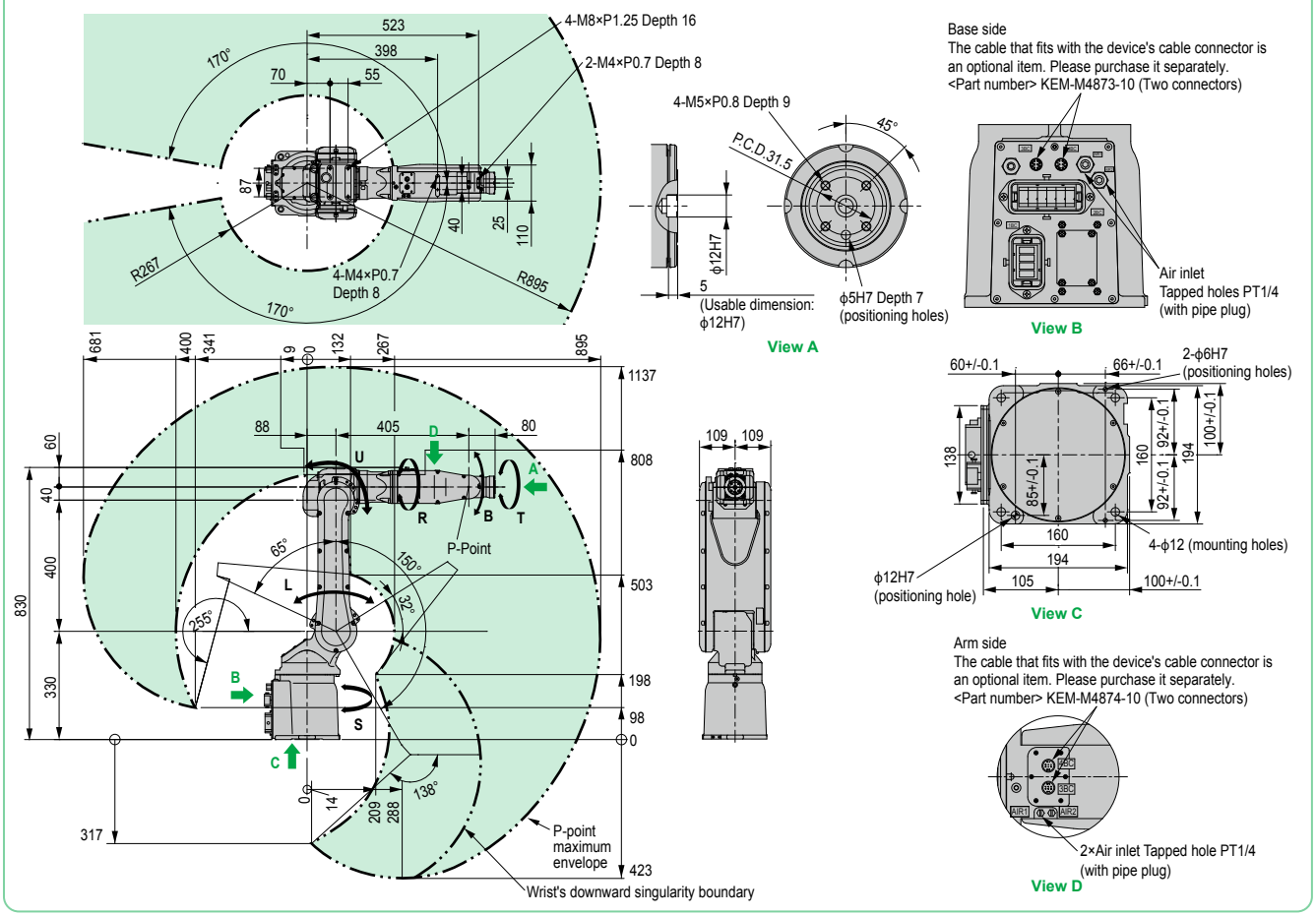

Controller YAC100 ▶ 157

YA-R6F 6-axis

● Maximum payload 6 kg ● Longest Reach R1422 mm

Note. The YA series does not comply with the EU RoHS directive.

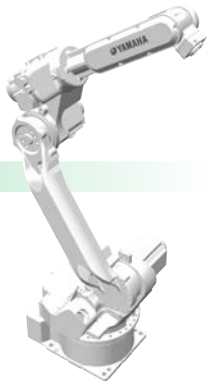

Ordering method

YA-R6F	-	4L	-	YAC100	-	N	-		-		-	
Model	-	Power cable length	-	Controller	-	Safety standard	-	Language setting	-	Option I/O	-	Network option
		4L: 4m				N: Normal		JE: Japanese/English JC: Japanese/Chinese EJ: English/Japanese EC: English/Chinese		N, P: Standard I/O 28/28 N1, P1: 56/56 points N2, P2: 84/84 points N3, P3: 112/112 points N4, P4: 140/140 points		No entry : None CC: CC-Link DM: DeviceNet master DS: DeviceNet slave PB: PROFIBUS EP: EtherNet/IP™ PM: Profinet master PT: Profinet slave ES: EtherCAT slave

Note. Thanks to the higher control rate of the YAC100 controller and vibration-damping control of the arm, we have reduced the residual vibration when the arm stops moving, while shortening the cycle time and achieving the fastest speed in this class.
Note. Longest reach in its class (1422 mm) and increased moment capacity of the wrist.
Note. Floor-mounted, wall-mounted, and ceiling-mounted types are available. Please contact us separately regarding wall-mounted or ceiling-mounted installations.
Note. This unit can also be used in combination with a travel axis or other external axis. Please contact us.

Specifications

Controlled Axis		6
Payload		6 kg
Repeatability		+/-0.08 mm
Range of Motion	S-axis (turning)	-170° to +170° Note 1
	L-axis (lower Arm)	-90° to +155°
	U-axis (upper arm)	-175° to +250°
	R-axis (wrist roll)	-180° to +180°
	B-axis (wrist pich/yaw)	-45° to +225°
	T-axis (wrist twist)	-360° to +360°
Maximum Speed	S-axis (turning)	3.84 rad/s, 220°/s
	L-axis (lower Arm)	3.49 rad/s, 200°/s
	U-axis (upper arm)	3.84 rad/s, 220°/s
	R-axis (wrist roll)	7.16 rad/s, 410°/s
	B-axis (wrist pich/yaw)	7.16 rad/s, 410°/s
	T-axis (wrist twist)	10.65 rad/s, 610°/s

Allowable Moment	R-axis (wrist roll)	11.8 N·m
	B-axis (wrist pich/yaw)	9.8 N·m
	T-axis (wrist twist)	5.9 N·m
Allowable Inertia ($GD^2/4$)	R-axis (wrist roll)	0.27 kg·m^2
	B-axis (wrist pich/yaw)	0.27 kg·m^2
	T-axis (wrist twist)	0.06 kg·m^2
Mass		130 kg
Ambient Conditions	Temperature	0 to +45˚C
	Humidity	20 to 80%RH (non-condensing)
	Vibration	4.9 m/s^2 or less
	Others	•Free from corrosive gasses or liquids, or explosive gasses •Free from exposure to water, oil, or dust •Free from excessive electrical noise (plasma)
Power Requirements Note 2		1.0 kVA

Note 1. For wall-mounted installation, the S-axis operating range is +/-30°.
Note 2. Varies in accordance with applications and motion patterns.
Note. SI units are used for specifications.

YA-R6F

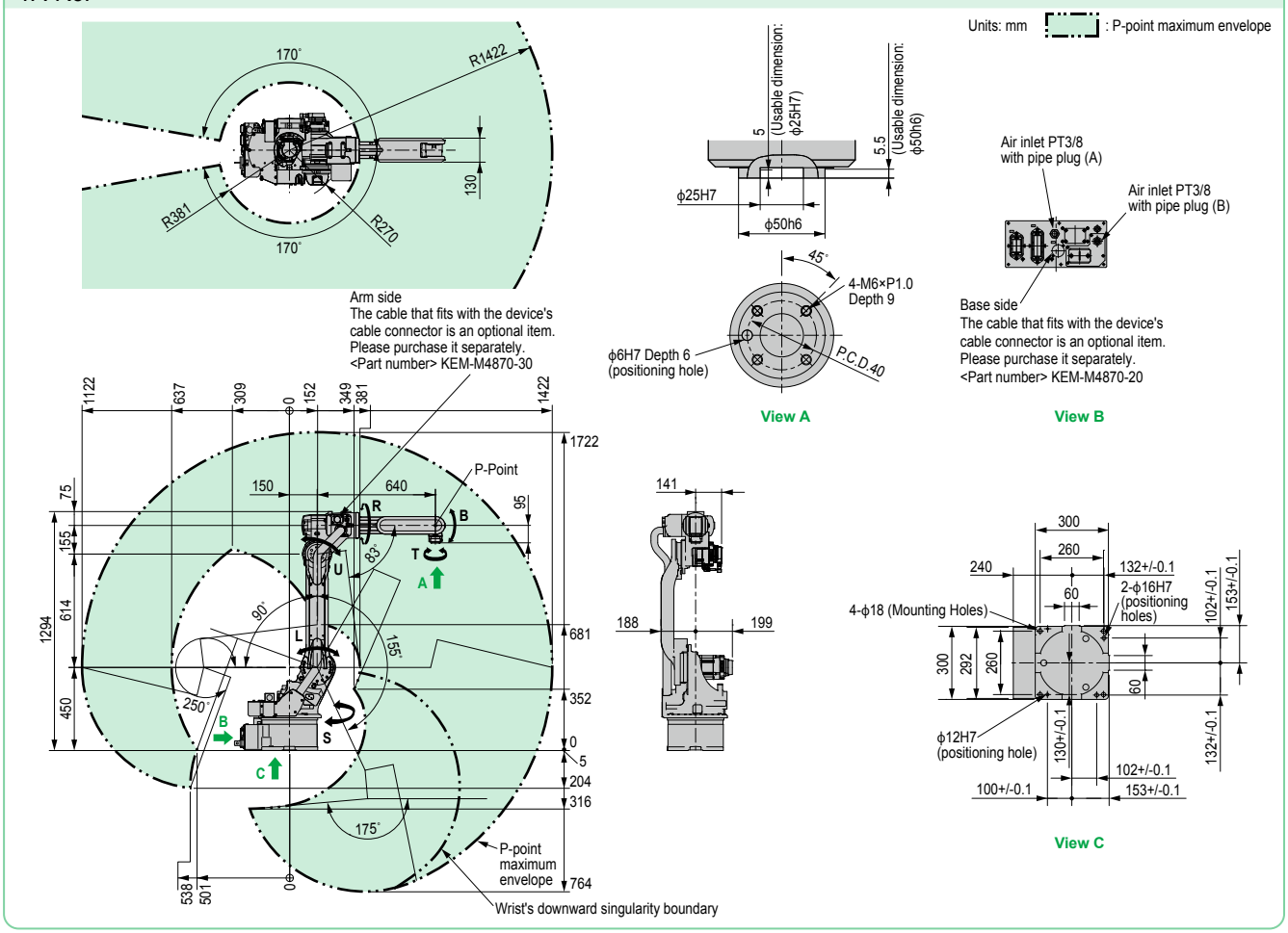

Controller YAC100 ▶ 157

YA-U5F

7-axis

Maximum payload 5 kg

Note. The YA series does not comply with the EU RoHS directive.

Ordering method

YA-U5F	-	4L	-	YAC100	-	N	-		-		-	
Model	-	Power cable length	-	Controller	-	Safety standard	-	Language setting	-	Option I/O	-	Network option
		4L: 4m				N: Normal		JE: Japanese/English JC: Japanese/Chinese EJ: English/Japanese EC: English/Chinese		N, P: Standard I/O 28/28 N1, P1: 56/56 points N2, P2: 84/84 points N3, P3: 112/112 points N4, P4: 140/140 points		No entry : None CC: CC-Link DM: DeviceNet master DS: DeviceNet slave PB: PROFIBUS EP: EtherNet/IP™ PM: Profinet master PT: Profinet slave ES: EtherCAT slave

Note. High degree of motion like a human arm with its 7-axis arm.
Note. The arm has been slimmed by employing a newly developed miniaturized actuator for the wrist section, greatly reducing the interference of the arm with the workpiece.
Note. The narrowing of the motion range that usually results when downsizing a robot is avoided by an ingenious mechanism used for the arm joints, so maximum range is maintained.
Note. Light and weighs only 30 kg, so many installation choices are available: floor, ceiling, or wall. Please contact us separately regarding wall-mounted or ceiling-mounted installations.
Note. By utilizing internal user I/O wiring harness and air lines integrated in the arm, layout can be planned offline without worrying about peripheral interference.
(Internal user I/O wiring harness and air lines specifications: two air lines and eight-core cables)
External axis specification for a hand can be accommodated. Contact YAMAHA regarding your requirements.

Specifications

Controlled Axis		7
Payload		5 kg
Repeatability		+/-0.06 mm
Range of Motion	**S-axis (turning)**	-180˚ to +180˚
	L-axis (lower Arm)	-110˚ to +110˚
	E-axis (elbow twist)	-170˚ to +170˚
	U-axis (upper arm)	-90˚ to +115˚
	R-axis (wrist roll)	-180˚ to +180˚
	B-axis (wrist pich/yaw)	-110˚ to +110˚
	T-axis (wrist twist)	-180˚ to +180˚
Maximum Speed	**S-axis (turning)**	3.49 rad/s, 200˚/s
	L-axis (lower Arm)	3.49 rad/s, 200˚/s
	E-axis (elbow twist)	3.49 rad/s, 200˚/s
	U-axis (upper arm)	3.49 rad/s, 200˚/s
	R-axis (wrist roll)	3.49 rad/s, 200˚/s
	B-axis (wrist pich/yaw)	4.01 rad/s, 230˚/s
	T-axis (wrist twist)	6.11 rad/s, 350˚/s

Allowable Moment	**R-axis (wrist roll)**	14.7 N·m
	B-axis (wrist pich/yaw)	14.7 N·m
	T-axis (wrist twist)	7.35 N·m
Allowable Inertia ($GD^2/4$)	**R-axis (wrist roll)**	0.45 kg·m^2
	B-axis (wrist pich/yaw)	0.45 kg·m^2
	T-axis (wrist twist)	0.11 kg·m^2
Mass		30 kg
Power Requirements[Note 1]		1.0 kVA
Ambient Conditions	**Temperature**	0 to +40˚C
	Humidity	20 to 80%RH (non-condensing)
	Vibration	4.9 m/s^2 or less
	Others	•Free from corrosive gasses or liquids, or explosive gasses •Free from exposure to water, oil, or dust •Free from excessive electrical noise (plasma)

Note 1. Varies in accordance with applications and motion patterns.
Note. SI units are used for specifications.

YA-U5F

Units: mm : P-point maximum envelope

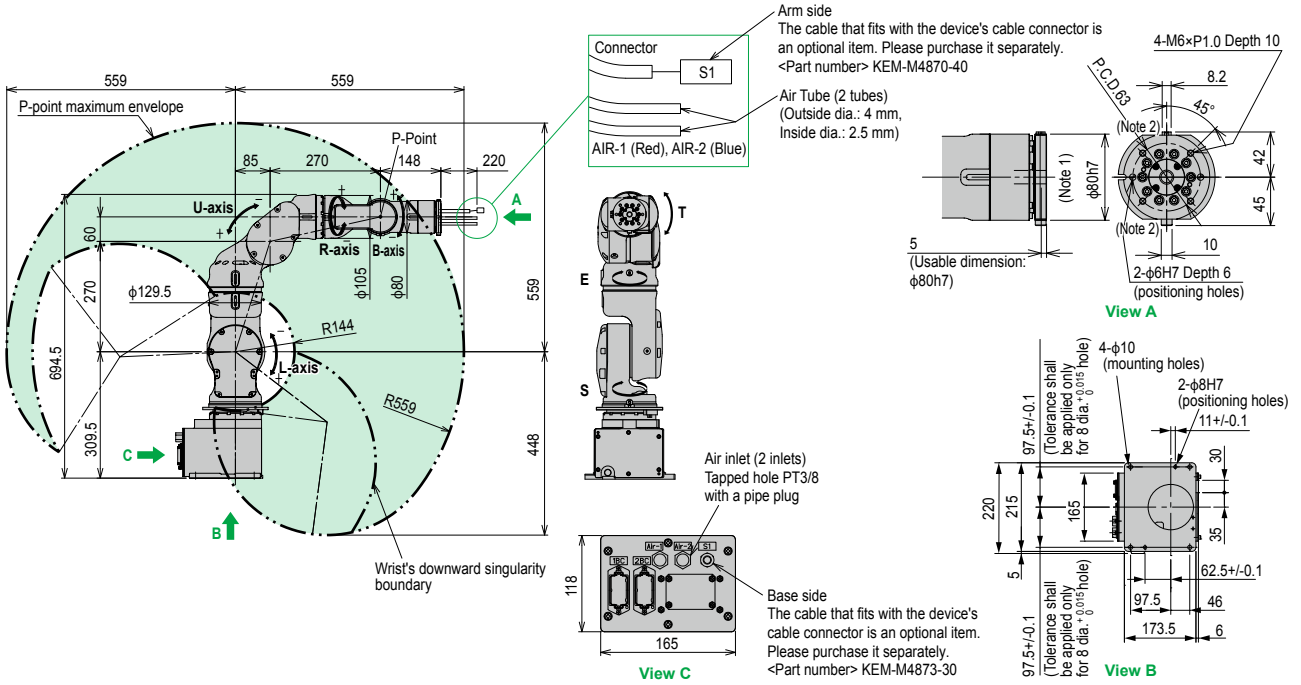

Note 1. The flange is equipped with a cable through hole. When mounting equipment such as an attachment, ensure that no foreign liquid, oil, or dust go into hole.
Note 2. A bolt is mounted for T-axis grease replenished. When attaching an attachment to 80 dia. -0.035/0 part of the T-axis, enough space for the grease zerk (A-MT6X1) is required to the shape of the attachment.

Controller YAC100 ▶ 157

YA-U10F

7-axis

Maximum payload 10 kg

Note. The YA series does not comply with the EU RoHS directive.

Ordering method

YA-U10F	-	4L	-	YAC100	-	N	-		-		-	
Model	-	Power cable length	-	Controller	-	Safety standard	-	Language setting	-	Option I/O	-	Network option
		4L: 4m				N: Normal		JE: Japanese/English JC: Japanese/Chinese EJ: English/Japanese EC: English/Chinese		N, P: Standard I/O 28/28 N1, P1: 56/56 points N2, P2: 84/84 points N3, P3: 112/112 points N4, P4: 140/140 points		No entry : None CC: CC-Link DM: DeviceNet master DS: DeviceNet slave PB: PROFIBUS EP: EtherNet/IP™ PM: Profinet master PT: Profinet slave ES: EtherCAT slave

Note. High degree of motion like a human arm with its 7-axis arm.
Note. The high flexibility of motion makes operation possible even in narrow spaces inaccessible to humans.
Note. Folds to compact size when not in use.
Note. Many installation options: on the floor, on the wall or on the ceiling. Please contact us separately regarding wall-mounted or ceiling-mounted installations.
Note. Optimal for handling small objects.
Note. By utilizing internal user I/O wiring harness and air lines integrated in the arm, layout can be planned offline without worrying about peripheral interference.
(Internal user I/O wiring harness and air lines specifications: two air hoses and twelve-core cables)
External axis specification for a hand can be accommodated. Contact YAMAHA regarding your requirements.

Specifications

Controlled Axis		7
Payload		10 kg
Repeatability		+/-0.1 mm
Range of Motion	**S-axis (turning)**	-180˚ to +180˚
	L-axis (lower Arm)	-110˚ to +110˚
	E-axis (elbow twist)	-170˚ to +170˚
	U-axis (upper arm)	-135˚ to +135˚
	R-axis (wrist roll)	-180˚ to +180˚
	B-axis (wrist pich/yaw)	-110˚ to +110˚
	T-axis (wrist twist)	-180˚ to +180˚
Maximum Speed	**S-axis (turning)**	2.97 rad/s, 170˚/s
	L-axis (lower Arm)	2.97 rad/s, 170˚/s
	E-axis (elbow twist)	2.97 rad/s, 170˚/s
	U-axis (upper arm)	2.97 rad/s, 170˚/s
	R-axis (wrist roll)	3.49 rad/s, 200˚/s
	B-axis (wrist pich/yaw)	3.49 rad/s, 200˚/s
	T-axis (wrist twist)	6.98 rad/s, 400˚/s

Allowable Moment	**R-axis (wrist roll)**	31.4 N·m
	B-axis (wrist pich/yaw)	31.4 N·m
	T-axis (wrist twist)	19.6 N·m
Allowable Inertia ($GD^2/4$)	**R-axis (wrist roll)**	1.0 kg·m^2
	B-axis (wrist pich/yaw)	1.0 kg·m^2
	T-axis (wrist twist)	0.4 kg·m^2
Mass		60 kg
Power Requirements[Note 1]		1.0 kVA
Ambient Conditions	**Temperature**	0 to +40˚C
	Humidity	20 to 80%RH (non-condensing)
	Vibration	4.9 m/s^2 or less
	Others	•Free from corrosive gasses or liquids, or explosive gasses •Free from exposure to water, oil, or dust •Free from excessive electrical noise (plasma)

Note 1. Varies in accordance with applications and motion patterns.
Note. SI units are used for specifications.

YA-U10F

Units: mm : P-point maximum envelope

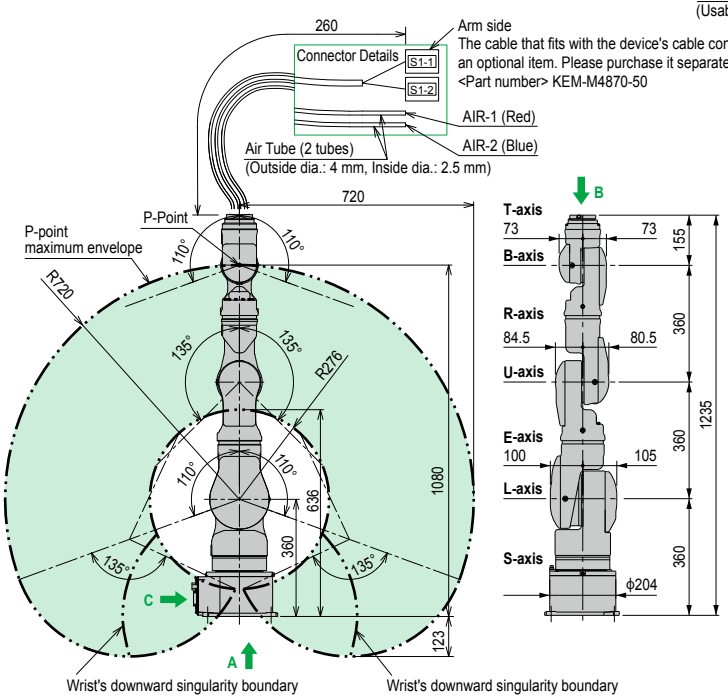

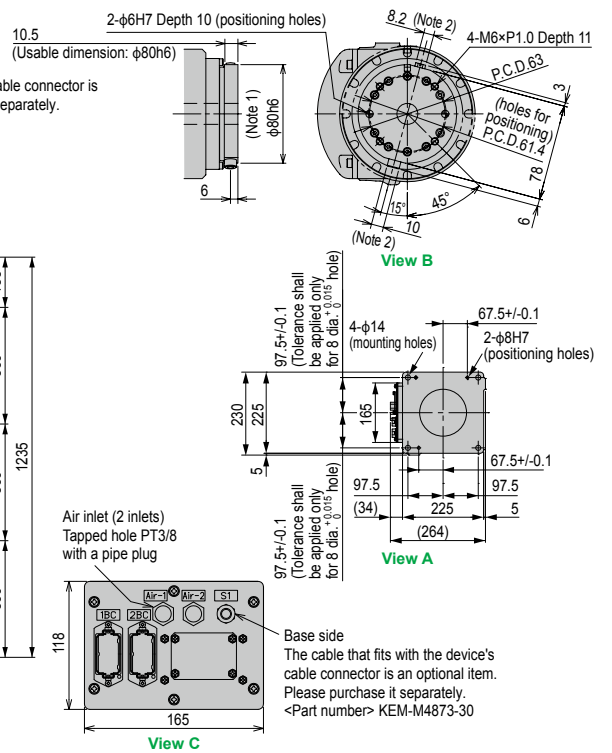

Note 1. The flange is equipped with a cable through hole. When mounting equipment such as an attachment, ensure that no foreign liquid, oil, or dust go into hole.
Note 2. A bolt is mounted for T-axis grease replenished. When attaching an attachment to 80 dia. -0.035/0 part of the T-axis, enough space for the grease zerk (A-MT6X1) is required to the shape of the attachment.

Controller YAC100 ▶ 157

YA-U20F

7-axis

Maximum payload 20 kg

Note. The YA series does not comply with the EU RoHS directive.

Ordering method

YA-U20F	-	4L	-	YAC100	-	N	-		-		-	
Model	-	Power cable length	-	Controller	-	Safety standard	-	Language setting	-	Option I/O	-	Network option
		4L: 4m				N: Normal		JE: Japanese/English JC: Japanese/Chinese EJ: English/Japanese EC: English/Chinese		N, P: Standard I/O 28/28 N1, P1: 56/56points N2, P2: 84/84 points N3, P3: 112/112 points N4, P4: 140/140 points		No entry : None CC: CC-Link DM: DeviceNet master DS: DeviceNet slave PB: PROFIBUS EP: EtherNet/IP™ PM: Profinet master PT: Profinet slave ES: EtherCAT slave

Note. High degree of motion like a human arm with its 7-axis arm.
Note. The high flexibility of motion makes operation possible even in narrow spaces inaccessible to humans.
Note. Folds to compact size when not in use.
Note. Many installation options: on the floor, on the wall or on the ceiling. Please contact us separately regarding wall-mounted or ceiling-mounted installations.
Note. Assembles and handles heavy objects up to 20 kg.
Note. By utilizing internal user I/O wiring harness and air lines integrated in the arm, layout can be planned offline without worrying about peripheral interference.
(Internal user I/O wiring harness and air lines specifications: two air hoses and sixteen-core cables)
External axis specification for a hand can be accommodated. Contact YAMAHA regarding your requirements.

Specifications

Controlled Axis		7
Payload		20 kg
Repeatability		+/-0.1 mm
Range of Motion	S-axis (turning)	-180˚ to +180˚
	L-axis (lower Arm)	-110˚ to +110˚
	E-axis (elbow twist)	-170˚ to +170˚
	U-axis (upper arm)	-130˚ to +130˚
	R-axis (wrist roll)	-180˚ to +180˚
	B-axis (wrist pich/yaw)	-110˚ to +110˚
	T-axis (wrist twist)	-180˚ to +180˚
Maximum Speed	S-axis (turning)	2.27 rad/s, 130˚/s
	L-axis (lower Arm)	2.27 rad/s, 130˚/s
	E-axis (elbow twist)	2.97 rad/s, 170˚/s
	U-axis (upper arm)	2.97 rad/s, 170˚/s
	R-axis (wrist roll)	3.49 rad/s, 200˚/s
	B-axis (wrist pich/yaw)	3.49 rad/s, 200˚/s
	T-axis (wrist twist)	6.98 rad/s, 400˚/s

Allowable Moment	R-axis (wrist roll)	58.8 N·m
	B-axis (wrist pich/yaw)	58.8 N·m
	T-axis (wrist twist)	29.4 N·m
Allowable Inertia ($GD^2/4$)	R-axis (wrist roll)	4.0 kg·m^2
	B-axis (wrist pich/yaw)	4.0 kg·m^2
	T-axis (wrist twist)	2.0 kg·m^2
Mass		120 kg
Power Requirements Note 1		1.5 kVA
Ambient Conditions	Temperature	0 to +40˚C
	Humidity	20 to 80%RH (non-condensing)
	Vibration	4.9 m/s^2 or less
	Others	• Free from corrosive gasses or liquids, or explosive gasses • Free from exposure to water, oil, or dust • Free from excessive electrical noise (plasma)

Note 1. Varies in accordance with applications and motion patterns.
Note. SI units are used for specifications.

YA-U20F

Units: mm ▭ : P-point maximum envelope

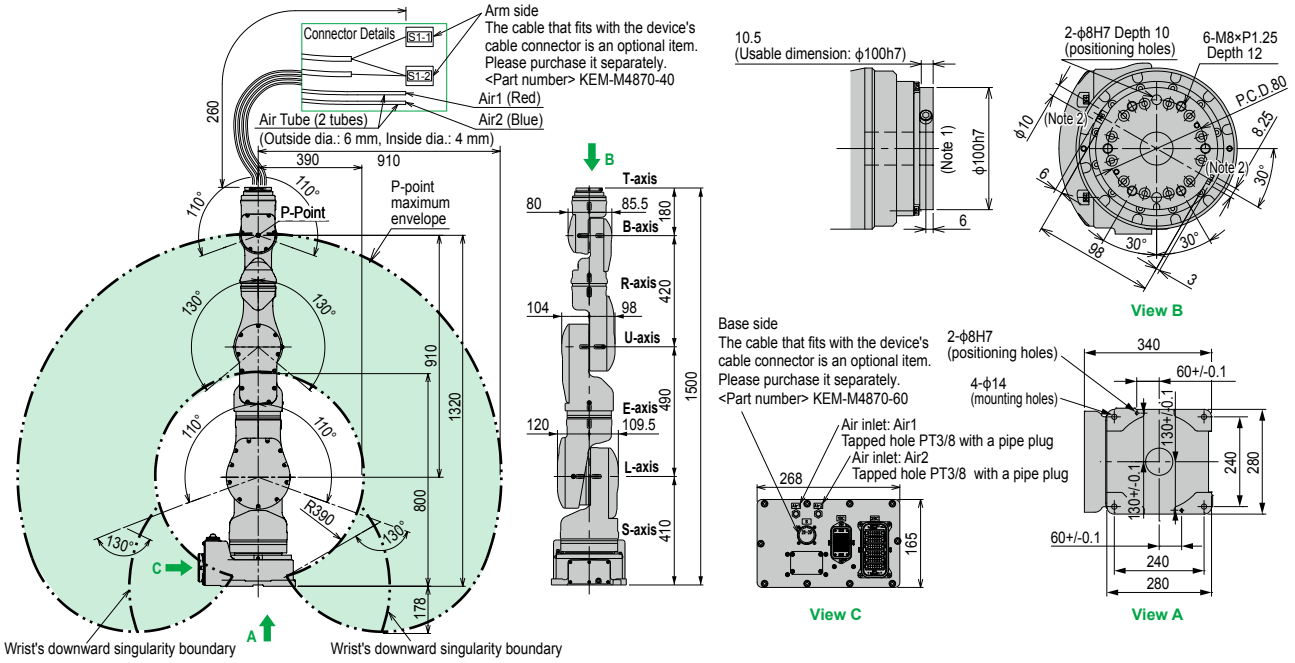

Note 1. The flange is equipped with a cable through hole. When mounting equipment such as an attachment, ensure that no foreign liquid, oil, or dust go into hole.
Note 2. A bolt is mounted for T-axis grease replenished. When attaching an attachment to 80 dia. -0.035/0 part of the T-axis, enough space for the grease zerk (A-MT6X1) is required to the shape of the attachment.

Controller YAC100 ▶ 157

Controller for use with the YA series

YAC100 Specifications

■ YAC100 controller specifications

Configuration	Standard: IP20 (open structure)
Dimensions	470 mm (W) × 420 mm (D) × 200 mm (H) (Protrusions are not included.)
Mass	20 kg
Cooling System	Direct cooling
Ambient Temperature	During operation: 0˚C to +40˚C During storage : -10˚C to +60˚C
Relative Humidity	90% max. (non-condensing)
Power Supply Note	Single-phase 200/230 VAC (+10% to -15%), 50/60 Hz Three-phase 200/220 VAC (+10% to -15%), 50/60 Hz
Grounding	Grounding resistance: 100 Ω or less
Digital I/Os	Specialized signals: 8 inputs and 11 output General signals : 16 inputs and 16 outputs Max. I/O (optional) : 1,024 inputs and 1,024 outputs
Positioning System	By serial encoder
Programming Capacity	JOB: 10,000 steps, 1,000 instructions CIO ladder: 1,500 steps
Expansion Slots	MP2000 bus × 5 slots
LAN (Connection to Host)	1 (10BASE-T/100BASE-TX)
Interface	RS-232C: 1ch
Control Method	Software servo control
Drive Units	Six axes for robots. Two more axes can be added as external axes. (Can be installed in the controller.)
Painting Color	Munsell notation 5Y7/1 (reference value)

Note. YA-R6F: Three-phase only.

■ YAP programming pendant specifications

Dimensions	169 mm (W) × 314.5 mm (H) × 50 mm (D)
Mass	0.990 kg
Material	Reinforced plastics
Operation Device	Select keys, axis keys (8 axes), numerical/application keys, Mode switch with key (mode: teach, play, and remote), emergency stop button, enable switch, compact flash card interface device (compact flash is optional.), USB port (1 port)
Display	640 × 480 pixels color LCD, touch panel (Alphanumeric characters, Chinese characters, Japanese letters, Others)
IEC Protection Class	IP65
Cable Length	Standard: 8 m, 4 m / 8 m / 12 m extension cable (maximum 20 m)

■ Optimum controller for handling and assembly

The YAC100 is a compact controller with improved performance and functions optimized for handling and assembly.

- Fits in a 19-inch rack and can be installed under conveyors.
- Commands specifically designed for workpiece handling with synchronized conveyors.

Hardware Options

- External axis (max.: 2 axes)
- I/O module (28 points, NPN or PNP)
- Major fieldbus interface boards DeviceNet™ (master/slave), CC-Link (slave), PROFIBUS (slave), EtherNet/IP™ (slave, I/O communications), EtherCAT (slave), PROFINET (master/slave)

Optional Functions

- Conveyor synchronization
- Vision function
- External reference point control
- Software pendant

■ Regarding the concurrent I/O ladder program

The YAC100 controller is equipped with an NPN (or PNP) for standard I/O. Dedicated input/output is assigned to this standard I/O board. For this reason, if dedicated input/output is to be assigned to various types of field bus, concurrent I/O ladder program settings must be made.

Sample programs can be downloaded from our website.Note
https://global.yamaha-motor.com/business/robot/

Note. The member site requires registration.

A robot simulator that implements the same functionality as the actual controller

MotoSim EG-VRC-CadPack for YAMAHA

Virtual programming before the actual line is completed allows major reduction in line startup time.

- **Modeling layout**
  Models of workers and workpieces can be easily laid out.
- **Intuitive control of models**
  Models can be moved intuitively, simply by using the mouse.
- **Programming and debugging**
  Automatic generation of robot operating programs, job editing, and job analysis can be performed easily.
- **Intuitive robot operation**
  The robot's posture can be operated intuitively, allowing more efficient teaching.
- **Robot simulation**
  The robot can be watched as it operates, allowing visual verification.

Accessories and part options

YA Series

■ Standard accessories

YAP programming box (with 8m cable)

Name	Model	Language
YAP-J	KEN-M5110-0J	Japanese
YAP-E	KEN-M5110-0E	English
YAP-C	KEN-M5110-0C	Chinese

Parts for the YAC100 controller

Name	Model
Power supply connector	KEN-M4871-00
Power supply cable clamp	KEN-M4836-00
Dummy connector for shorting safety signal	KEN-M5370-00
Power supply protection fuse	KEN-M5853-00
Standard I/O connector (STD.IO)	KBH-M4420-00
	KEN-M4420-00

Power cable (robot cable)

Manipulator name	Model	Cable length	Cable diameter		Bending radius
YA-RJ	KEM-M4710-40	4 m	Signal wire	ϕ8.5 mm	85.0 mm
			Power wire	ϕ13.5 mm	140.0 mm
YA-R3F	KEM-M4711-40	4 m	Signal wire	ϕ17.5 mm	180.0 mm
			Power wire	ϕ19.5 mm	200.0 mm
YA-R5F/R5LF/R6F	KEM-M4712-40	4 m	Signal wire	ϕ17.5 mm	180.0 mm
			Power wire	ϕ19.5 mm	180.0 mm
YA-U5F/U10F	KEM-M4713-40	4 m	Signal wire	ϕ17.5 mm	180.0 mm
			Power wire	ϕ16.1 mm	180.0 mm
YA-U20F	KEM-M4714-40	4 m	Signal wire	ϕ17.5 mm	180.0 mm
			Power wire	ϕ26.0 mm	260.0 mm

■ Options

Power cable (robot cable)

Manipulator name	Model			Cable diameter		Bending radius
	Cable length (10 m)	Cable length (15 m)	Cable length (20 m)			
YA-RJ	KEM-M4710-A0	KEM-M4710-F0	KEM-M4710-L0	Signal wire	ϕ8.5 mm	85.0 mm
				Power wire	ϕ13.5 mm	140.0 mm
YA-R3F	KEM-M4711-A0	KEM-M4711-F0	KEM-M4711-L0	Signal wire	ϕ17.5 mm	180.0 mm
				Power wire	ϕ19.5 mm	200.0 mm
YA-R5F/R5LF/R6F	KEM-M4712-A0	KEM-M4712-F0	KEM-M4712-L0	Signal wire	ϕ17.5 mm	180.0 mm
				Power wire	ϕ19.5 mm	180.0 mm
YA-U5F/U10F	KEM-M4713-A0	KEM-M4713-F0	KEM-M4713-L0	Signal wire	ϕ17.5 mm	180.0 mm
				Power wire	ϕ16.1 mm	180.0 mm
YA-U20F	KEM-M4714-A0	KEM-M4714-F0	KEM-M4714-L0	Signal wire	ϕ17.5 mm	180.0 mm
				Power wire	ϕ26.0 mm	260.0 mm

Device cable connector (connector for user wiring)

Manipulator name	Part position	Model	Remarks
YA-RJ	Base side	KEM-M4870-00	
	Arm side	KEM-M4870-10	
YA-R3F	Base side	KEM-M4873-00	
	Arm side	KEM-M4874-00	
YA-R5F/R5LF	Base side	KEM-M4873-10	Two connectors
	Arm side	KEM-M4874-10	Two connectors
YA-R6F	Base side	KEM-M4870-20	
	Arm side	KEM-M4870-30	
YA-U5F	Base side	KEM-M4873-30	
	Arm side	KEM-M4870-40	
YA-U10F	Base side	KEM-M4873-30	
	Arm side	KEM-M4870-50	
YA-U20F	Base side	KEM-M4870-60	
	Arm side	KEM-M4870-40 Note	

Note. Two connectors are required on the arm side of YA-U20F.

Extension cable for YAP (extension cable for programming box)

Name	Model	Cable length
Extension cable for YAP	KEN-M531F-10	4 m
	KEN-M531F-20	8 m
	KEN-M531F-30	12 m

Dummy connector for YAP

Name	Model
YAP dummy connector	KEN-M5163-00

■ Maintenance parts

Name	Model
Battery unit for YA-RJ/R3F	KEM-M53G3-10
YA-R5F/R5LF/R6F Battery unit for YA-U5F/U10F/U20F	KEM-M53G3-00
Battery unit for YAC100 controller	KEN-M53G3-00
AC fan motor	KEN-M6175-00