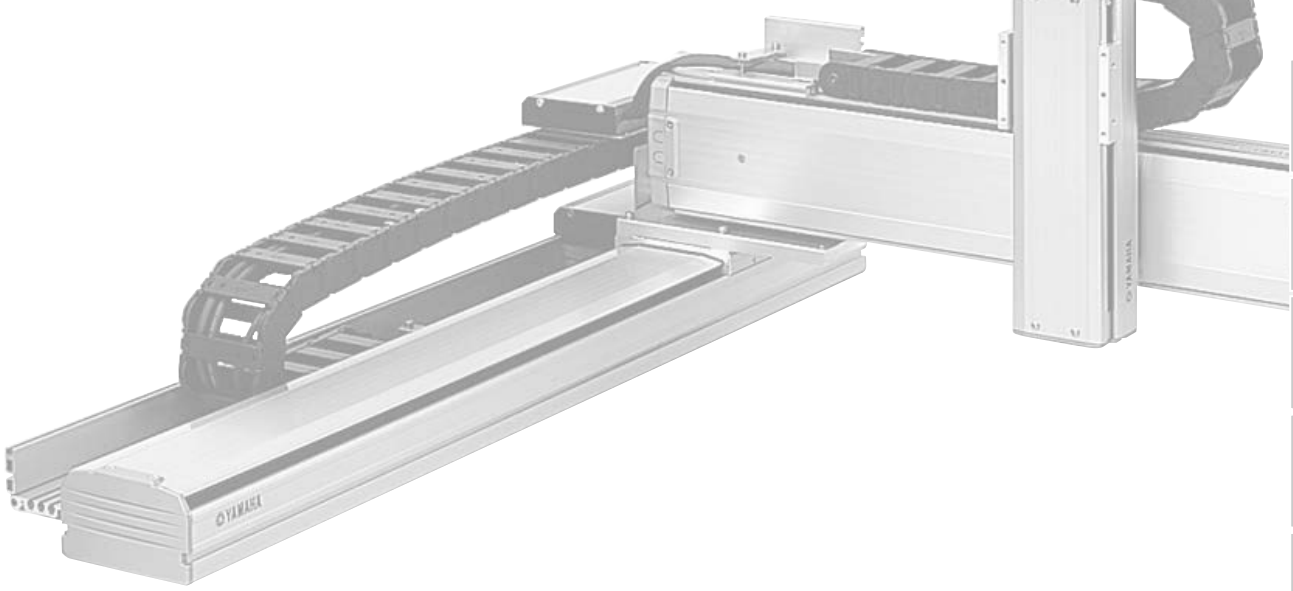

CARTESIAN ROBOTS

XY-X SERIES

CONTENTS

■ Arm & cable variations ····· 378
■ 2-axis spec selection guide ··· 380
■ 3-axis spec selection guide ··· 382
■ Robot ordering method description ····· 386
■ Robot ordering method terminology ····· 387

ARM TYPE

PXYx 2 axes C ····· 388
FXYx 2 axes C ····· 390
FXYx 2 axes / IO C ····· 392
FXYx 3 axes / ZS C ····· 393
FXYx 3 axes / ZT6L C ····· 394
FXYBx 2 axes C ····· 396
FXYBx 2 axes S ····· 398
FXYBx 2 axes / IO C ····· 400
SXYx 2 axes C ····· 402
SXYx 2 axes S ····· 404
SXYx 2 axes / IO C ····· 406
SXYx 3 axes / ZF C ····· 408
SXYx 3 axes / ZF S ····· 409
SXYx 3 axes / ZFL20 ····· 410
SXYx 3 axes / ZFH C ····· 411
SXYx 3 axes / ZS C ····· 412
SXYx 3 axes / ZS S ····· 413
SXYx 4 axes / ZRF C ····· 414
SXYx 4 axes / ZRF S ····· 415
SXYx 4 axes / ZRFL20 C ····· 416
SXYx 4 axes / ZRFH C ····· 417
SXYx 4 axes / ZRS C ····· 418
SXYx 4 axes / ZRS S ····· 419
SXYBx 2 axes C ····· 420
SXYBx 3 axes / ZF C ····· 422
SXYBx 3 axes / ZFL20 C ····· 423
SXYBx 3 axes / ZFH C ····· 424
SXYBx 3 axes / ZS C ····· 425
SXYBx 4 axes / ZRS C ····· 426
NXY 2 axes C ····· 428
NXY 3 axes / ZFL C ····· 430
NXY 3 axes / ZFH C ····· 432
NXY-W 4 axes C ····· 434
NXY-W 6 axes / ZFL C ····· 435
NXY-W 6 axes / ZFH C ····· 436
MXYx 2 axes C ····· 438
MXYx 2 axes S ····· 440
MXYx 2 axes / IO C ····· 442
MXYx 3 axes / ZFL20/10 C ····· 443
MXYx 3 axes / ZFH C ····· 444
MXYx 4 axes / ZRFL20/10 C ····· 445
MXYx 4 axes / ZRFH C ····· 446
HXYx 2 axes C ····· 448
HXYx 3 axes / ZL C ····· 450
HXYx 3 axes / ZH C ····· 451
HXYx 4 axes / ZRL C ····· 452
HXYx 4 axes / ZRH C ····· 453
HXYLx 2 axes C ····· 454

GANTRY TYPE

MXYx 2 axes C ····· 456
MXYx 2 axes / IO C ····· 458
MXYx 3 axes / ZFL20/10 C ····· 459
MXYx 3 axes / ZFH C ····· 460
MXYx 4 axes / ZRFL20/10 C ····· 461
MXYx 4 axes / ZRFH C ····· 462
HXYx 2 axes C ····· 464
HXYx 3 axes / ZL C ····· 466
HXYx 3 axes / ZH C ····· 467
HXYx 4 axes / ZRL C ····· 468
HXYx 4 axes / ZRH C ····· 469
HXYLx 2 axes C ····· 470

MOVING ARM TYPE

SXYx 2 axes S ····· 472
SXYx 3 axes / ZF S ····· 474
SXYx 3 axes / ZFL20 S ····· 475
SXYx 3 axes / ZFH S ····· 476
SXYx 3 axes / ZS S ····· 477
MXYx 2 axes C ····· 478
MXYx 3 axes / ZFL20/10 C ····· 480
MXYx 3 axes / ZFH C ····· 481
HXYx 2 axes C ····· 482
HXYx 3 axes / ZH C ····· 484

POLE TYPE

SXYx 2 axes S ····· 486
MXYx 2 axes C ····· 487
MXYx 2 axes S ····· 488
MXYx 3 axes / ZPMH C ····· 489
HXYx 2 axes C ····· 490
HXYx 2 axes S ····· 491
HXYx 3 axes / ZPH C ····· 492
HXYx 3 axes / ZPH S ····· 493

XZ TYPE

SXYx 2 axes / ZF C ····· 494
SXYx 2 axes / ZF S ····· 495
SXYx 2 axes / ZFL20 C ····· 496
SXYx 2 axes / ZS C ····· 497
SXYx 2 axes / ZF C ····· 498
SXYBx 2 axes / ZFL20 C ····· 499
MXYx 2 axes / ZFL10 C ····· 500
MXYx 2 axes / ZFH C ····· 501
HXYx 2 axes / ZL C ····· 502
HXYx 2 axes / ZH C ····· 503

Arm & cable variations

Cable variations

Two cable types are available; cable carrier type and whipover type. (except PXYX) The cable carrier type is supplied with a user cable as standard so that cable can be added easily. The whipover type is supplied with a user cable and tube as standard set. A cable duct specially designed for clean rooms is also available. (See P.534 to P.539 for detailed information on Clean Cartesian robots.)

Cable carrier (C)

When adding cables to a cable carrier track, keep the cable occupation rate at 30% or less.

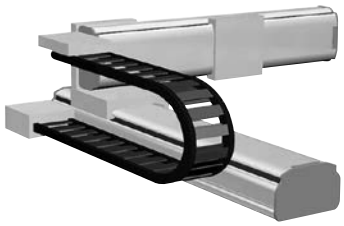

Note. User cable 10 cores, 0.3 sq.

Whipover (S)

Adding a load on whipover will result in sagging and cut. Sagging may also occur when using long strokes.

Note. User cable: 7 cores, 0.2 sq.
Note. User tube: 2 ϕ4 air tubes.

Arm variations

The first step for selection of Cartesian type robot models is to check for applicable models according to specific use and operation area.

Arm type

The type with moving Y-axis carriage.

P.388

Gantry type

The type with a guide railing at the end of Y-axis for support.

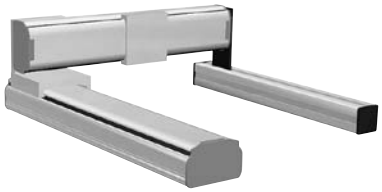

P.456

Moving arm type

The type with a moving Y-axis arm.

P.472

Pole type

The type with vertically moving Y-axis carriage.

P.486

XZ type

The type with combination of X-axis for horizontal movement and Z-axis for vertical movement.

P.494

Clean type

Special model for clean rooms with moving Y-axis carriage installed upward.

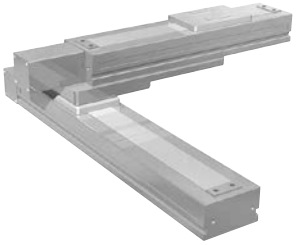

P.534

A1

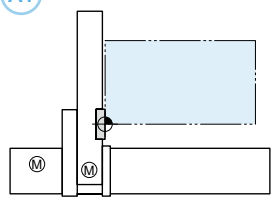

A2

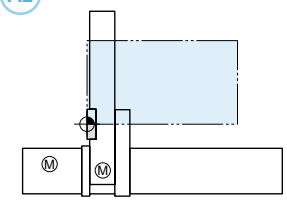

A3

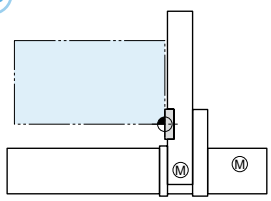

A4

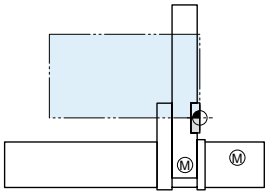

G1

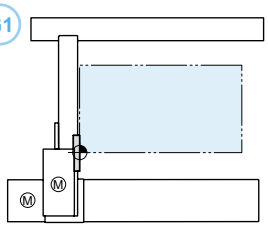

G2

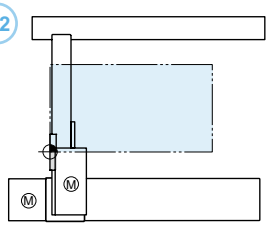

G3

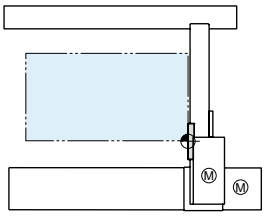

G4

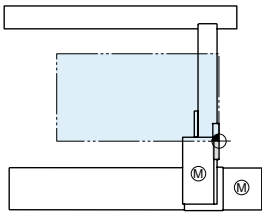

M1

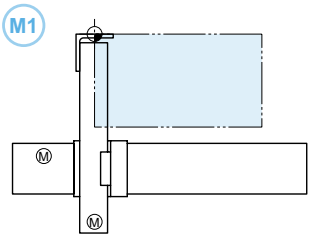

M3

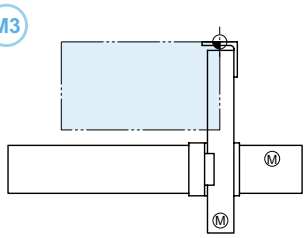

P1

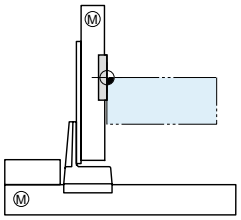

P2

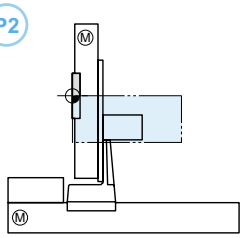

F1

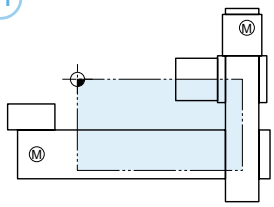

F3

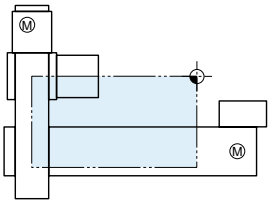

T1

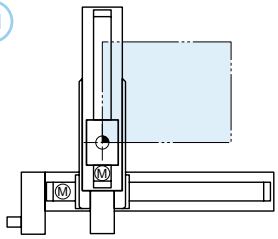

T3

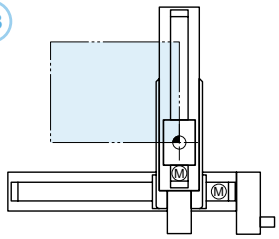

2-axis spec selection guide

Setting method

While checking conditions in order starting from①, proceed to the right. Select the desired model in ⑥.

① Select the arm variation

Arm type
The type with moving Y-axis carriage.

Gantry type
The type with a guide railing at the end of Y-axis for support.

Moving arm type
The type with a moving Y-axis arm.

Pole type
The type with vertically moving Y-axis carriage.

XZ type
The type with combination of X-axis for horizontal movement and Z-axis for vertical movement.

② Select a line satisfying both the Y-axis stroke and payload and move to the right.

③ Check the cable types

④ Check the X axis stroke

⑤ Select the desired speed

⑥ Decide the model

①

②

Arm type

	Y-axis stroke (mm)									
	50	100	150	200	250	300	350	400	450	500
Payload (kg)	4.5	4.5	3.5	2.5	2	1.5				

	Y-axis stroke (mm)									
	150	250	350	450	550	650	750	850	950	1050
Payload (kg)	12		11	9	7					
	12		11	9	7					
	7	6	5		3					
	7	6	5		3					
	7	6	5		3					
	20	17	15	13	11	9				
	20	17	15	13	11	9				
	19	16	14	12	10	8				
	14	12	10	8	7					
	25	21	18	16	13	11				
	30		25	20		16				
	30		25	20		16				
	29		24	19		15				
		40		35	30					
		40		35	30					

Gantry type

	Y-axis stroke (mm)									
	150	250	350	450	550	650	750	850	950	1050
Payload (kg)	30						25	20		
	29						24	19		
		50								
		50								

Moving arm type

	Y-axis stroke (mm)									
	150	250	350	450	550	650	750	850	950	1050
Payload (kg)	15	14	13							
	20									
		30								

Pole type

	Y-axis stroke (mm)									
	150	250	350	450	550	650	750	850	950	1050
Payload (kg)	8									
	20									
	20									
		30								
		30								

XZ type

	Z-axis stroke (mm)									
	150	250	350	450	550	650	750	850	950	1050
Payload (kg)	10									
	10									
	8									
	3									
	5									
	10									
	8									
	15									
	14	13	12							
		20								
		30								

③	④	⑤	⑥ Decide the model	
Cable type	X-axis stroke (mm)	Maximum speed (X-axis / Y-axis) (mm/sec)	Model (Note 1)	Detailed info page
Cable carrier	150 to 650	720 / 720	PXYx-C-A*	P.388

Cable type	X-axis stroke (mm)	Maximum speed (X-axis / Y-axis) (mm/sec)	Model	Detailed info page
Cable carrier	150 to 1050	1200 / 800	FXYx-C-A*	P.390
Cable carrier	150 to 1050	1200 / 800	FXYx-C-A* (I/O)	P.392
Cable carrier	150 to 2450	1875 / 1875	FXYBx-C-A*	P.396
Whipover	150 to 950	1875 / 1875	FXYBx-S-A*	P.398
Cable carrier	150 to 2450	1875 / 1875	FXYBx-C-A* (I/O)	P.400
Cable carrier	150 to 1050	1200 / 1200	SXYx-C-A*	P.402
Whipover	150 to 850	1200 / 1200	SXYx-S-A*	P.404
Cable carrier	150 to 1050	1200 / 1200	SXYx-C-A* (I/O)	P.406
Cable carrier	150 to 3050	1875 / 1875	SXYBx-C-A*	P.420
Cable carrier	500 to 2000	1200 / 1200	NXY-C-A*	P.428
Cable carrier	250 to 1250	1200 / 1200	MXYx-C-A*	P.438
Whipover	250 to 850	1200 / 1200	MXYx-S-A*	P.440
Cable carrier	250 to 1250	1200 / 1200	MXYx-C-A* (I/O)	P.442
Cable carrier	250 to 1250	1200 / 1200	HXYx-C-A*	P.448
Cable carrier	1150 to 2050	1200 / 1200	HXYLx-C-A*	P.454

Cable type	X-axis stroke (mm)	Maximum speed (X-axis / Y-axis) (mm/sec)	Model	Detailed info page
Cable carrier	250 to 1050	1200 / 1200	MXYx-C-G*	P.456
Cable carrier	250 to 1050	1200 / 1200	MXYx-C-G* (I/O)	P.458
Cable carrier	250 to 1250	1200 / 1200	HXYx-C-G*	P.464
Cable carrier	1150 to 2050	1200 / 1200	HXYLx-C-G*	P.470

Cable type	X-axis stroke (mm)	Maximum speed (X-axis / Y-axis) (mm/sec)	Model	Detailed info page
Cable carrier	150 to 850	1200 / 1200	SXYx-C-M*	P.472
Cable carrier	250 to 1250	1200 / 1200	MXYx-C-M*	P.478
Cable carrier	250 to 1250	1200 / 1200	HXYx-C-M*	P.484

Cable type	X-axis stroke (mm)	Maximum speed (X-axis / Y-axis) (mm/sec)	Model	Detailed info page
Whipover	150 to 850	1200 / 600	SXYx-S-P*	P.486
Cable carrier	250 to 1250	1200 / 600	MXYx-C-P*	P.487
Whipover	250 to 950	1200 / 600	MXYx-S-P*	P.488
Cable carrier	250 to 1250	1200 / 600	HXYx-C-P*	P.490
Whipover	250 to 850	1200 / 600	HXYx-S-P*	P.491

Cable type	X-axis stroke (mm)	Maximum speed (X-axis / Y-axis) (mm/sec)	Model	Detailed info page
Cable carrier	150 to 1050	1200 / 600	SXYx-C-F* (ZF)	P.494
Whipover	150 to 850	1200 / 600	SXYx-S-F* (ZF)	P.495
Cable carrier	150 to 1050	1200 / 1200	SXYx-C-F* (ZFL20)	P.496
Cable carrier	150 to 1050	1200 / 1000	SXYx-C-F* (ZS12)	P.497
Cable carrier	150 to 1050	1200 / 500	SXYx-C-F* (ZS6)	P.497
Cable carrier	150 to 3050	1875 / 600	SXYBx-C-F* (ZF)	P.498
Cable carrier	150 to 3050	1875 / 1200	SXYBx-C-F* (ZFL20)	P.499
Cable carrier	150 to 1050	1200 / 600	MXYx-C-F* (ZFL10)	P.500
Cable carrier	150 to 1050	1200 / 600	MXYx-C-F* (ZFH)	P.501
Cable carrier	250 to 1250	1200 / 600	HXYx-C-F* (ZL)	P.502
Cable carrier	250 to 1250	1200 / 300	HXYx-C-F* (ZH)	P.503

Note 1. The figure entered at * inside the form, expresses the arm variation. See P. 378 for more information.

3-axis spec selection guide

Setting method

While checking conditions in order starting from①, proceed to the right. Select the desired model in ⑥.

① Select the arm variation

Arm type
The type with moving Y-axis carriage.

Moving arm type
The type with a moving Y-axis arm.

Gantry type
The type with a guide railing at the end of Y-axis for support.

Pole type
The type with vertically moving Y-axis carriage.

①

Arm type

②

Z-axis		
Speed (mm/sec)	Stroke (mm)	Installation method
1000	150	Shaft vertical type
500	150	
800	50 to 300	Clamped base · moving table type (60W)
600	150	Clamped base · moving table type (100W)
	250	
	350	
	150	Clamped base · moving table type (100W)
	250	
	350	
1200	150	Clamped base · moving table type (200W)
	250	
	350	
600	150	Clamped table · moving base type (200W)
	250	
	350	
1000	150	Shaft vertical type
500	150	
600	150	Clamped base · moving table type (100W)
	250	
	350	
1200	150	Clamped base · moving table type (200W)
	250	
	350	
600	150	Clamped table · moving base type (200W)
	250	
	350	
1000	150	Shaft vertical type
500	150	
1200	150	Clamped base · moving table type (200W)
	250	
	350	
600	150	Clamped table · moving base type (200W)
	250	
	350	
600	150	Clamped base · moving table type (200W)
	250	
	350	
1200	150	Clamped base · moving table type (200W)
	250	
	350	
600	150	Clamped table · moving base type (200W)
	250	
	350	
600	250	Clamped base · moving table type (200W)
	350	
	450	
	550	
300	250	Clamped table · moving base type (200W)
	350	
	450	
	550	

③

	Y-axis stroke (mm)									
	150	250	350	450	550	650	750	850	950	1050
Payload (kg)	3									
	5				3					
	3									
	10		9	7	5	3				
	10		8	6	4	2				
	10	9	7	5	3	1				
	10		9	7	5	3				
	10	10	8	6	4	2				
	10	9	7	5	3	1				
	8			6	4	2				
	8		7	5	3	1				
	8		6	4	2	1				
	13	10	8	6	4	2				
	12	9	7	5	3	1				
	11	8	6	4	2	1				
	3									
	3									
	5									
	5									
	8	6	4	2	1					
	7	5	3	1						
	6	4	2							
	7	5	3	1						
	6	4	2							
	5	3	1							
	7	5	3	1						
	6	4	2							
	5	3	1							
	3									
	5			4	3					
	8				5	3				
	8			7	4	2				
	8			6	3	1				
	13	12	10	8	5	3				
	13	11	9	7	4	2				
	12	10	8	6	3	1				
	15			12	12	8				
	15			11	11	7				
	15			10	10	6				
	8									
	8					7				
	8					6				
	14			12		8				
	13			11		7				
	12			10		6				
		20			18					
		20			17					
		20		19	16					
		20		18	15					
		25		20	18					
		25		20	17					
		24		19	16					
		23		18	15					

② Check the Z-axis speed, stroke, and installation method → ③ Select a line satisfying both the Y-axis stroke and payload and move to the right. → ④ Check the cable types → ⑤ Check the X axis stroke → ⑥ Check the maximum speed on X-axis and Y-axis → ⑦ Decide the model

④ Cable type	⑤ X-axis stroke (mm)	⑥ Maximum speed (X-axis / Y-axis) (mm/sec)	⑦ Decide the model: Model (Note 1)	Detailed info page
Cable carrier	150 to 1050	1200 / 800	FXYx-C-A*-ZS12	P.393
			FXYx-C-A*-ZS6	P.393
			FXYx-C-A*-ZT6L	P.394
Cable carrier	150 to 1050	1200 / 1200	SXYx-C-A*-ZF	P.408
Whipover	150 to 850	1200 / 1200	SXYx-S-A*-ZF	P.409
Cable carrier	150 to 1050	1200 / 1200	SXYx-C-A*-ZFL20	P.410
Cable carrier	150 to 1050	1200 / 1200	SXYx-C-A*-ZFH	P.411
Cable carrier	150 to 1050	1200 / 1200	SXYx-C-A*-ZS12	P.412
Whipover	150 to 850		SXYx-S-A*-ZS12	P.412
Cable carrier	150 to 1050		SXYx-C-A*-ZS6	P.413
Whipover	150 to 850		SXYx-S-A*-ZS6	P.413
Cable carrier	150 to 3050	1875 / 1875	SXYBx-C-A*-ZF	P.422
Cable carrier	150 to 3050	1875 / 1875	SXYBx-C-A*-ZFL20	P.423
Cable carrier	150 to 3050	1875 / 1875	SXYBx-C-A*-ZFH	P.424
Cable carrier	150 to 3050	1875 / 1875	SXYBx-C-A*-ZS12	P.425
Cable carrier	150 to 3050	1875 / 1875	SXYBx-C-A*-ZS6	P.425
Cable carrier	500 to 2000	1200 / 1200	NXY-C-A*-ZFL20	P.430
Cable carrier	500 to 2000	1200 / 1200	NXY-C-A*-ZFH	P.432
Cable carrier	250 to 1250	1200 / 1200	MXYx-C-A*-ZFL10	P.443
Cable carrier	250 to 1250	1200 / 1200	MXYx-C-A*-ZFL20	P.443
Cable carrier	250 to 1250	1200 / 1200	MXYx-C-A*-ZFH	P.444
Cable carrier	250 to 1250	1200 / 1200	HXYx-C-A*-ZL	P.450
Cable carrier	250 to 1250	1200 / 1200	HXYx-C-A*-ZH	P.451

Note 1.The figure entered at * inside the form, expresses the arm variation. See P.378 for more information.

3-axis spec selection guide

①

②

③

Gantry type

Z-axis Speed (mm/sec)	Z-axis Stroke (mm)	Z-axis Installation method
600	150	Clamped base · moving table type (200W)
	250	
	350	
1200	150	Clamped base · moving table type (200W)
	250	
	350	
600	150	Clamped table · moving base type (200W)
	250	
	350	
600	250	Clamped base · moving table type (200W)
	350	
	450	
	550	
300	250	Clamped table · moving base type (200W)
	350	
	450	
	550	

Payload (kg)	Y-axis stroke (mm) 150	250	350	450	550	650	750	850	950	1050
	15							12		
	15							11		
	15							10		
	8									
	8									
	8									
	14							12		
	13							11		
	12							10		
		20								
		20								
		20								
		20								
		30								
		30								
		30								
		30								

Moving arm type

Z-axis Speed (mm/sec)	Z-axis Stroke (mm)	Z-axis Installation method
600	150	Clamped base · moving table type (100W)
	250	
	350	
1200	150	Clamped base · moving table type (200W)
	250	
	350	
600	150	Clamped table · moving base type (200W)
	250	
	350	
1000	150	Shaft vertical type
500	150	
600	150	Clamped base · moving table type (200W)
	250	
	350	
1200	150	Clamped base · moving table type (200W)
	250	
	350	
600	150	Clamped table · moving base type (200W)
	250	
	350	
300	250	Clamped table · moving base type (200W)
	350	
	450	
	550	

Payload (kg)	Y-axis stroke (mm) 150	250	350	450	550	650	750	850	950	1050
	9	8	7							
	8	7	6							
	7	6	5							
	8	8	7							
	8	7	6							
	7	6	5							
	9	8	7							
	8	7	6							
	7	6	5							
	3									
	5									
	12									
	11									
	10									
	8									
	12									
	11									
	10									
		18								
		18			17					
		18			16					
		18			15					

Pole type

Z-axis Speed (mm/sec)	Z-axis Stroke (mm)	Z-axis Installation method
1200	150	Clamped table · moving base type (200W)
	250	
	350	
1200	250	Clamped table · moving base type (200W)
	350	
	450	
	550	
	650	
1200	250	Clamped table · moving base type (200W)
	350	
	450	
	550	
	650	

Payload (kg)	Y-axis stroke (mm) 150	250	350	450	550	650	750	850	950	1050
	10									
	9									
	8									
		15								
		15								
		15								
		15								
		15								
		15								
		15								
		15								
		15								
		15								

④	⑤	⑥	⑦ Decide the model	
Cable type	X-axis stroke (mm)	Maximum speed (X-axis / Y-axis) (mm/sec)	Model (Note 1)	Detailed info page
Cable carrier	250 to 1050	1200 / 1200	MXYx-C-G*-ZFL10	P.459
Cable carrier	250 to 1050	1200 / 1200	MXYx-C-G*-ZFL20	P.459
Cable carrier	250 to 1050	1200 / 1200	MXYx-C-G*-ZFH	P.460
Cable carrier	250 to 1250	1200 / 1200	HXYx-C-G*-ZL	P.466
Cable carrier	250 to 1250	1200 / 1200	HXYx-C-G*-ZH	P.467

Cable type	X-axis stroke (mm)	Maximum speed (X-axis / Y-axis) (mm/sec)	Model (Note 1)	Detailed info page
Whipover	150 to 850	1200 / 1200	SXYx-S-M*-ZF	P.474
Whipover	150 to 850	1200 / 1200	SXYx-S-M*-ZFL20	P.475
Whipover	150 to 850	1200 / 1200	SXYx-S-M*-ZFH	P.476
Whipover	150 to 850	1200 / 1200	SXYx-S-M*-ZS12	P.477
Whipover	150 to 850	1200 / 1200	SXYx-S-M*-ZS6	P.477
Cable carrier	250 to 1250	1200 / 1200	MXYx-C-M*-ZFL10	P.480
Cable carrier	250 to 1250	1200 / 1200	MXYx-C-M*-ZFL20	P.480
Cable carrier	250 to 1250	1200 / 1200	MXYx-C-M*-ZFH	P.481
Cable carrier	250 to 1250	1200 / 1200	HXYx-C-M*-ZH	P.484

Note 1.The figure entered at * inside the form, expresses the arm variation. See P.378 for more information.

Cable type	X-axis stroke (mm)	Maximum speed (X-axis / Y-axis) (mm/sec)	Model	Detailed info page
Cable carrier	250 to 1250	1200 / 600	MXYX-C-P2-ZPMH	P.489
Cable carrier	250 to 1250	1200 / 600	HXYx-C-P2-ZPH	P.492
Whipover	250 to 850	1200 / 600	HXYx-S-P1-ZPH	P.493

Robot ordering method description

In the order format for the YAMAHA cartesian robots XY-X series, the notation (letters/numbers) for the mechanical section is shown linked to the controller section notation.

[Example]

■ **2-axis specifications**

● **Mechanical ▶ FXYx (Arm type)**

- Cable variations ▷ Cable carrier
- Combination (Arm variations) ▷ A1
- X-axis stroke ▷ 450mm
- Y-axis stroke ▷ 350mm
- Robot cable length ▷ 3.5M

● **Controller ▶ RCX320**

● **Ordering method**

FXYx-C-A1-45-35-3L-RCX320

Mechanical section — Controller section

To find detailed controller information see the controller page. **RCX320 ▶** P.626

① Model	② Cable	③ Combination Note 1	④ X-axis stroke	⑤ Y-axis stroke	⑧ Cable	⑨ Controller

PXYx	
FXYx	
FXYBx	
SXYx	
SXYBx	
NXY	
MXYx	
HXYx	
HXYLx	

C	Cable carrier
S	Whipover

A1 to 4	Arm type
G1 to 4	Gantry type
M1 / M3	Moving arm type
P1 / P2	Pole type
F1 / F3	XZ type

3L	3.5m
5L	5m
10L	10m

Note 1. To find detailed information on arm variations (combinations) see P.378.

[Example]

■ **3 / 4-axis specifications**

● **Mechanical ▶ SXYx (Moving arm type)**

- Cable variations ▷ Whipover
- Combination (Arm variations) ▷ M3
- X-axis stroke ▷ 850mm
- Y-axis stroke ▷ 150mm
- Z-axis stroke ▷ 150mm
- Robot cable length ▷ 5M

● **Controller ▶ RCX340**

● **Ordering method**

SXYx-S-M3-85-15-ZFH-15-5L-RCX340

Mechanical section — Controller section

To find detailed controller information see the controller page. **RCX340 ▶** P.636

① Model	② Cable	③ Combination	④ X-axis stroke	⑤ Y-axis stroke	⑥ ZR-axis	⑦ Z-axis stroke	⑧ Cable	⑨ Controller
								RCX340

FXYx	
SXYx	
SXYBx	
NXY	
MXYx	
HXYx	

C	Cable carrier
S	Whipover

A1 to 4	Arm type
G1 to 4	Gantry type
M1/3	Moving arm type
P1 to 2	Pole type

ZS	Shaft vertical type
ZT	Clamped base • moving table type (60W)
ZF	Clamped base • moving table type (100W)
ZFL/ZL	Clamped base • moving table type (200W)
ZFH/ZH	Clamped table • moving base type (200W)
ZPMH/ZPH	Clamped table • moving base type (200W) for Pole type
ZRF	Clamped base • moving table type (100W)+R-axis
ZRS	Shaft vertical type ZR-axis integrated type
ZRFL/ZRL	Clamped base • moving table type (200W)+R-axis
ZRFH/ZRH	Clamped table • moving base type (200W)+R-axis

3L	3.5m
5L	5m
10L	10m

Robot ordering method terminology

① **Model**	Enter the robot unit model.
② **Cable**	Cable specs can be selected. To find detailed information see P.378. C: Cable carrier S: Whipover
③ **Combination (Arm variations)**	Select the arm variation and combination method. ●**Arm type** The type with moving Y-axis carriage. ●**Gantry type** The type with a guide railing at the end of Y-axis for support. ●**Moving arm type** The type with a moving Y-axis arm. ●**Pole type** The type with vertically moving Y-axis carriage. ●**XZ type** The type with combination of X-axis for horizontal movement and Z-axis for vertical movement. ●**Clean type** Special model for clean rooms with moving Y-axis carriage installed upward. To find information on combinations see P.378.
④ **X-axis stroke**	Select the X axis stroke. Enter in centimeters (cm). (For example enter 50 for a stroke of 500mm.)
⑤ **Y-axis stroke**	Select the Y axis stroke. Enter in centimeters (cm). (For example enter 50 for a stroke of 500mm.)
⑥ **ZR-axis**	Select the Z axis installation direction. The R axis is installed with 4-axis specifications. **[3-axes]** ZS : Shaft vertical type ZT : Clamped base · moving table type (60W) ZF : Clamped base · moving table type (100W) ZFL/ZL : Clamped base · moving table type (200W) ZFH/ZH : Clamped table · moving base type (200W) ZPMH/ZPH : Clamped table · moving base type (200W) for pole type **[4-axes]** ZRF : Clamped base · moving table type (100W)+R axis ZRS : ZR axis integrated type ZRL/ZRFL : Clamped base · moving table type (200W)+R axis ZRH/ZRFH : Clamped table · moving base type (200W)+R axis
⑦ **Z-axis stroke**	Select the Z axis stroke. Enter in centimeters (cm). (For example enter 15 for a stroke of 150mm.)
⑧ **Cable**	Select the length of the robot cable connecting the robot and controller. **3L** : 3.5m **5L** : 5m **10L** : 10m
⑨ **Controller**	**2-axis specifications:** Select the RCX320. **3 / 4-axis specifications:** Select the RCX340.

PXYx 2 axes

Arm type Cable carrier

Ordering method

PXYx - C	-		-		-		-	RCX320-2	-		-		-		-	
Model	Cable	Combination	X-axis stroke	Y-axis stroke	Cable	Controller / Number of controllable axes	Safety standard	Option A (OP.A)	Option B (OP.B)	Vision System	Absolute battery
		A1 A2 A3 A4	15 to 65cm	5 to 30cm	3L: 3.5m 5L: 5m 10L: 10m						

Specify various controller setting items. RCX320 ▶ P.626

Specification

	X-axis	Y-axis
Axis construction Note 1	–	T4H
AC servo motor output (W)	60	30
Repeatability Note 2 (mm)	+/-0.02	+/-0.02
Drive system	Ball screw ϕ12	Ball screw ϕ8
Ball screw lead Note 3 (Deceleration ratio) (mm)	12	12
Maximum speed Note 4 (mm/sec)	720	720
Moving range (mm)	150 to 650	50 to 300
Robot cable length (m)	Standard: 3.5 Option: 5,10	

Note 1. Use caution that the flame machining (installation holes, tap holes) differs from single-axis robots'.
Note 2. Positioning repeatability in one direction.
Note 3. Leads not listed in the catalog are also available. Contact us for details.
Note 4. When the X-axis stroke is longer than 650mm, resonance of the ball screw may occur depending on the operation conditions (critical speed). In thiscase, reduce the speed setting on the program by referring to the maximum speeds shown in the table below.

Maximum payload (kg)

Y stroke (mm)	XY 2 axes
50	4.5
100	4.5
150	3.5
200	2.5
250	2
300	1.5

Controller

Controller	Operation method
RCX320	Programming / I/O point trace / Remote command / Operation using RS-232C communication

PXYx 2 axes A1

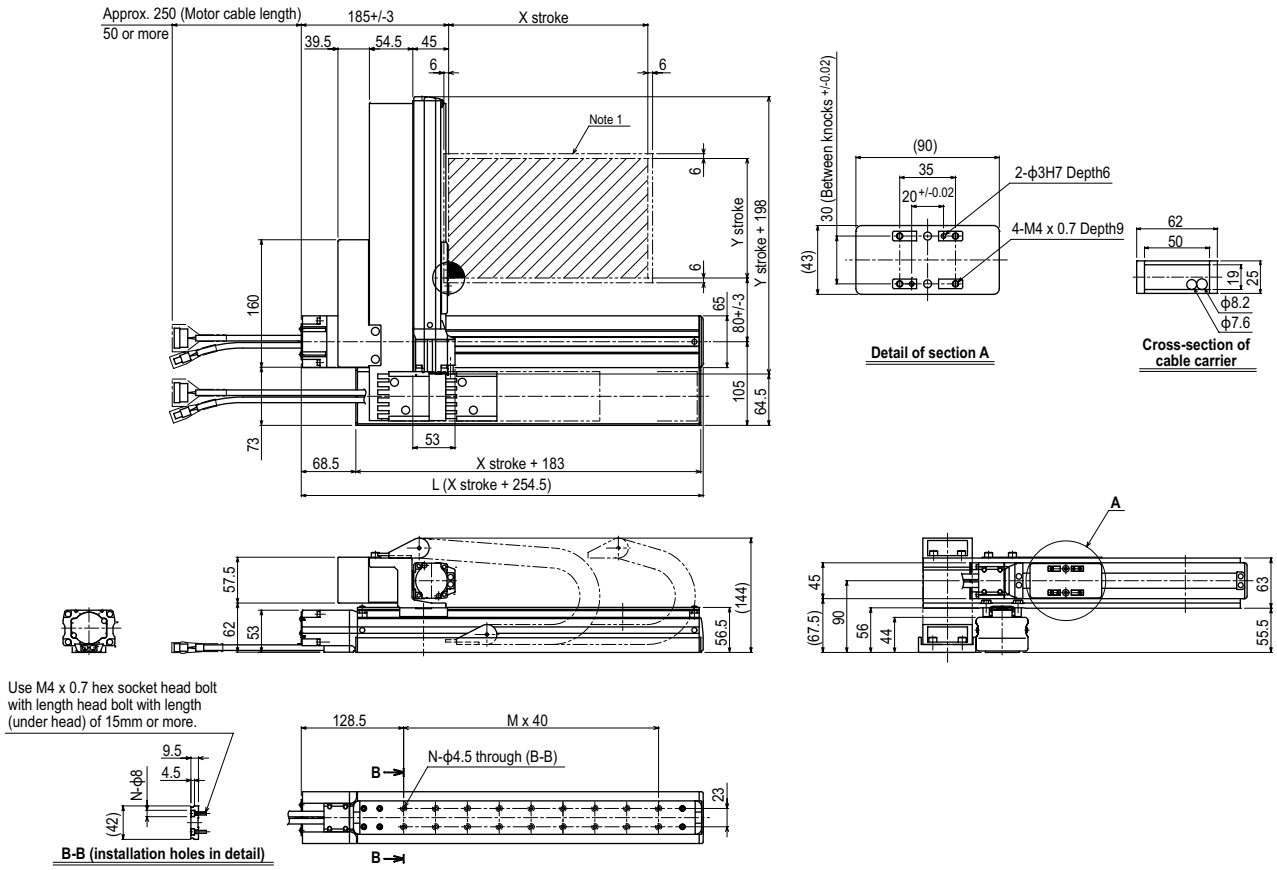

X stroke	150	250	350	450	550	650
L	404.5	504.5	604.5	704.5	804.5	904.5
M	5	8	10	13	15	18
N	12	18	22	28	32	38
Y stroke	**50**	**100**	**150**	**200**	**250**	**300**
Maximum speed for each stroke (mm/sec) Note 2 — X-axis	720					600
Maximum speed for each stroke (mm/sec) Note 2 — Speed setting	–					83%

Note 1. The moving range when returning to origin and the stop position when stopping by the mechanical stopper.

Note 2. When the X-axis stroke is longer than 650mm, resonance of the ball screw may occur depending on the operation conditions (critical speed). In this case, reduce the speed setting on the program by referring to the maximum speeds shown in the table at the left.

PXYx 2 axes A2

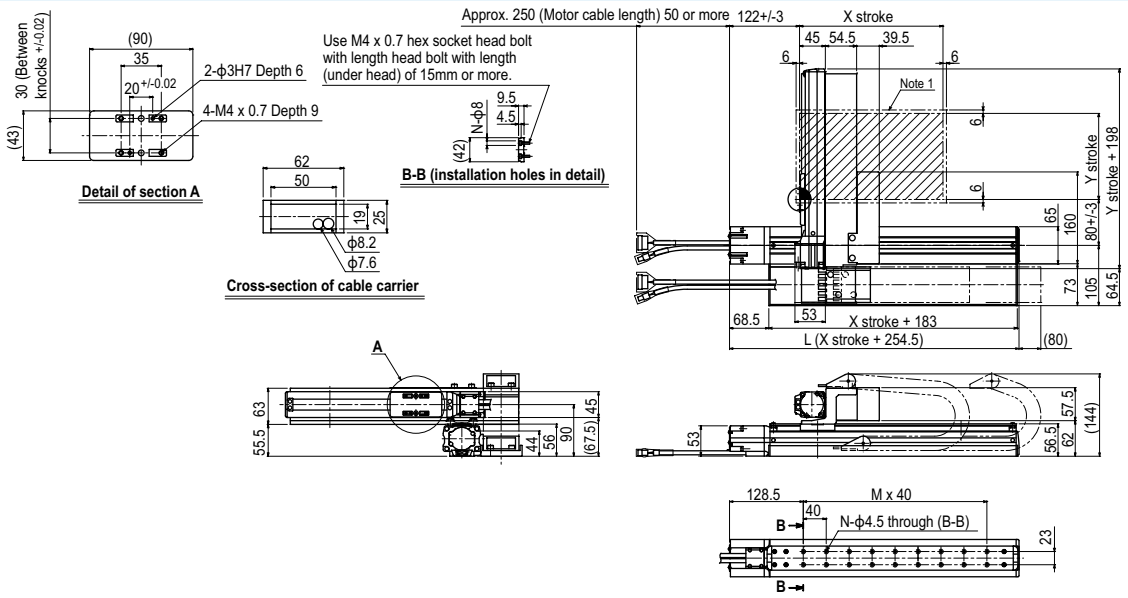

PXYx 2 axes A3

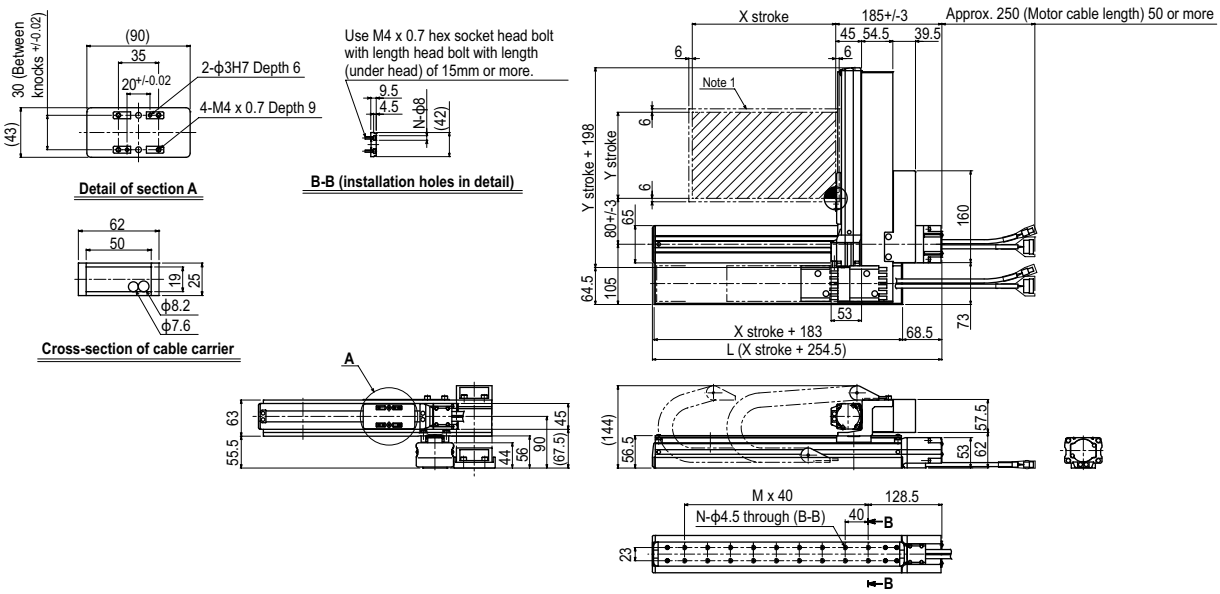

PXYx 2 axes A4

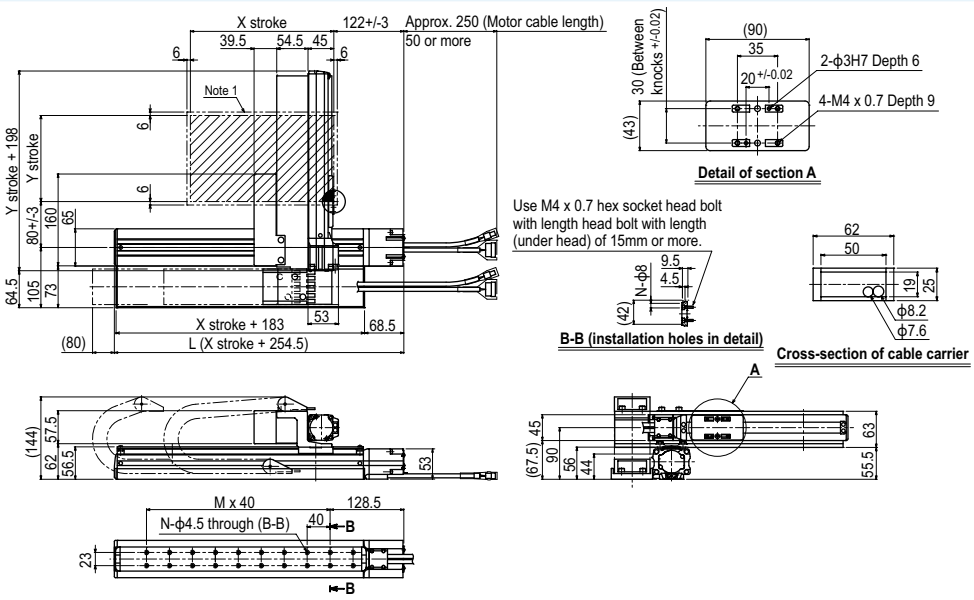

FXYx 2 axes

Arm type Cable carrier

Ordering method

FXYx - C	-		-		-		-	RCX320-2	-		-		-		-	
Model	Cable	Combination	X-axis stroke	Y-axis stroke	Cable	Controller / Number of controllable axes	Safety standard	Option A (OP.A)	Option B (OP.B)	Vision System	Absolute battery
		A1 A2 A3 A4	15 to 105cm	15 to 55cm	3L: 3.5m 5L: 5m 10L: 10m						

Specify various controller setting items. RCX320 ▶ P.626

Specification

	X-axis	Y-axis
Axis construction	–	–
AC servo motor output (W)	100	60
Repeatability Note 1 (mm)	+/-0.01	+/-0.02
Drive system	Ball screw ϕ15	Ball screw ϕ12
Ball screw lead Note 2 (Deceleration ratio) (mm)	20	12
Maximum speed Note 3 (mm/sec)	1200	800
Moving range (mm)	150 to 1050	150 to 550
Robot cable length (m)	Standard: 3.5 Option: 5,10	

Note 1. Positioning repeatability in one direction.
Note 2. Leads not listed in the catalog are also available. Contact us for details.
Note 3. When the X-axis stroke is longer than 750mm, resonance of the ball screw may occur depending on the operation conditions (critical speed). In this case, reduce the speed setting on the program by referring to the maximum speeds shown in the table below.

Maximum payload (kg)

Y stroke (mm)	XY 2 axes
150	12
250	12
350	11
450	9
550	7

Controller

Controller	Operation method
RCX320	Programming / I/O point trace / Remote command / Operation using RS-232C communication

FXYx 2 axes A1

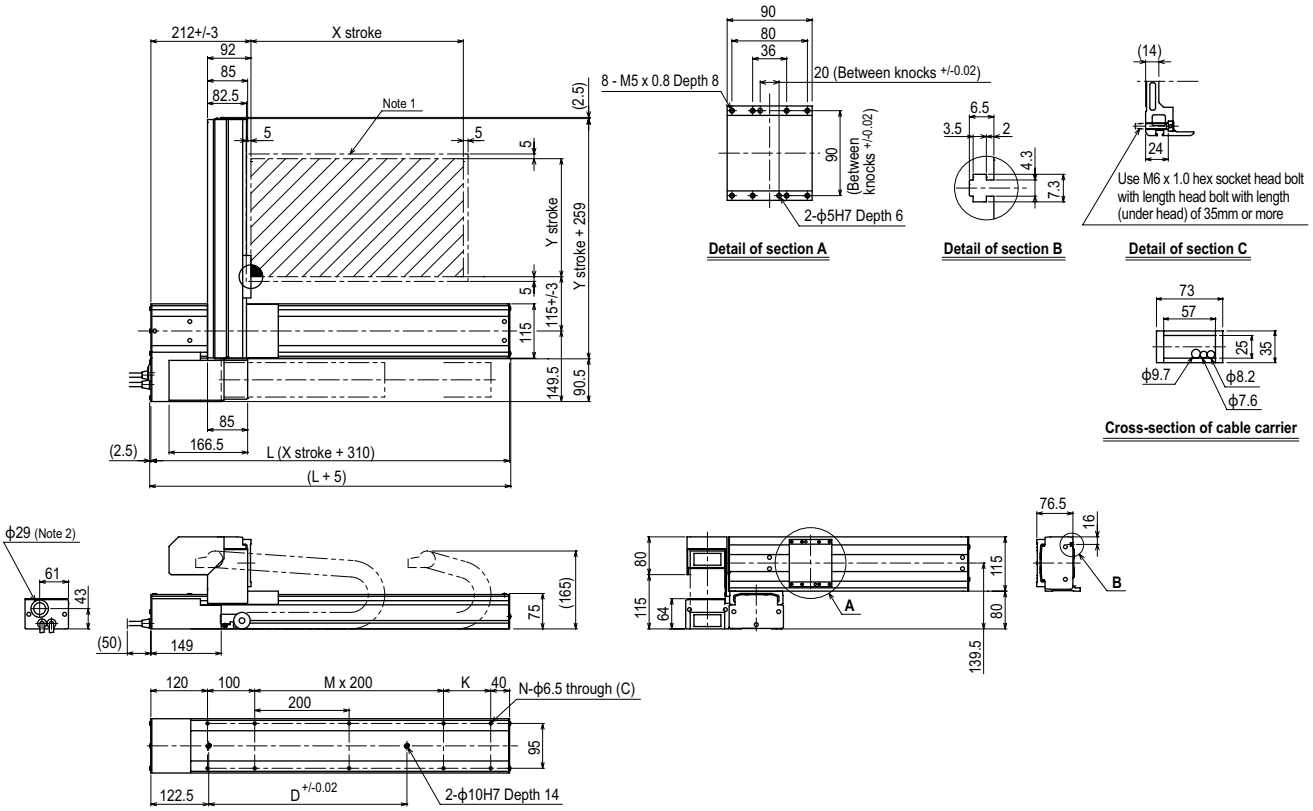

X stroke	150	250	350	450	550	650	750	850	950	1050
L	460	560	660	760	860	960	1060	1160	1260	1360
K	200	100	200	100	200	100	200	100	200	100
D	240	240	420	420	600	600	780	960	960	1140
M	0	1	1	2	2	3	3	4	4	5
N	6	8	8	10	10	12	12	14	14	16

Y stroke	150	250	350	450	550

Maximum speed for each stroke (mm/sec) Note 3								
X-axis	1200				960	780	600	540
Speed setting	–				80%	65%	50%	45%

Note 1. The moving range when returning to origin and the stop position when stopping by the mechanical stopper.
Note 2. User cable extraction port.
Note 3. When the X-axis stroke is longer than 750mm, resonance of the ball screw may occur depending on the operation conditions (critical speed). In this case, reduce the speed setting on the program by referring to the maximum speeds shown in the table at the left.

FXYx 2 axes A2

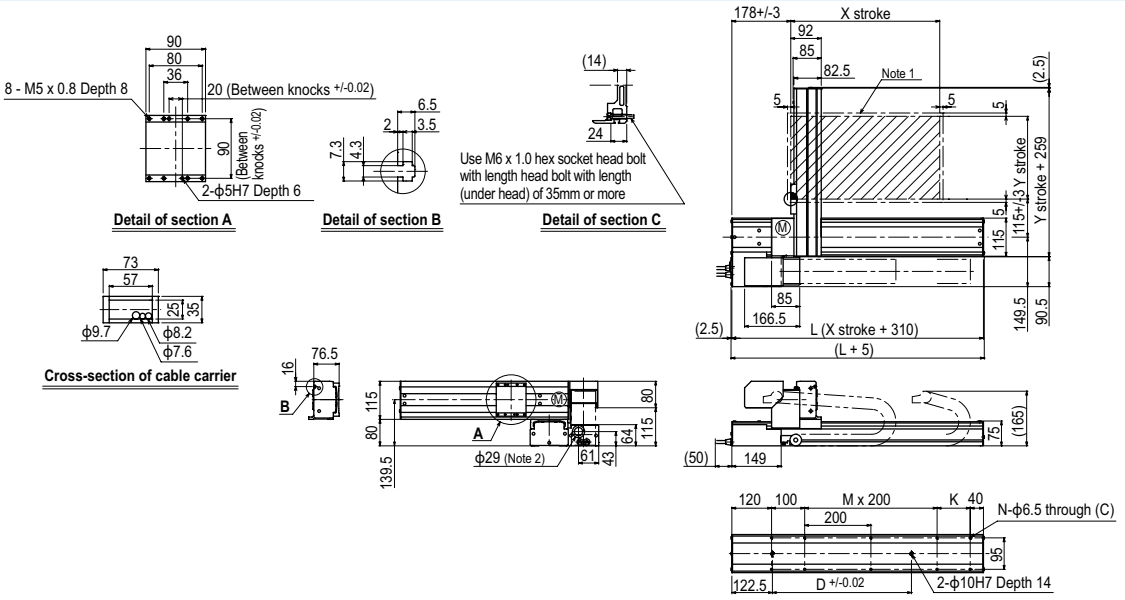

FXYx 2 axes A3

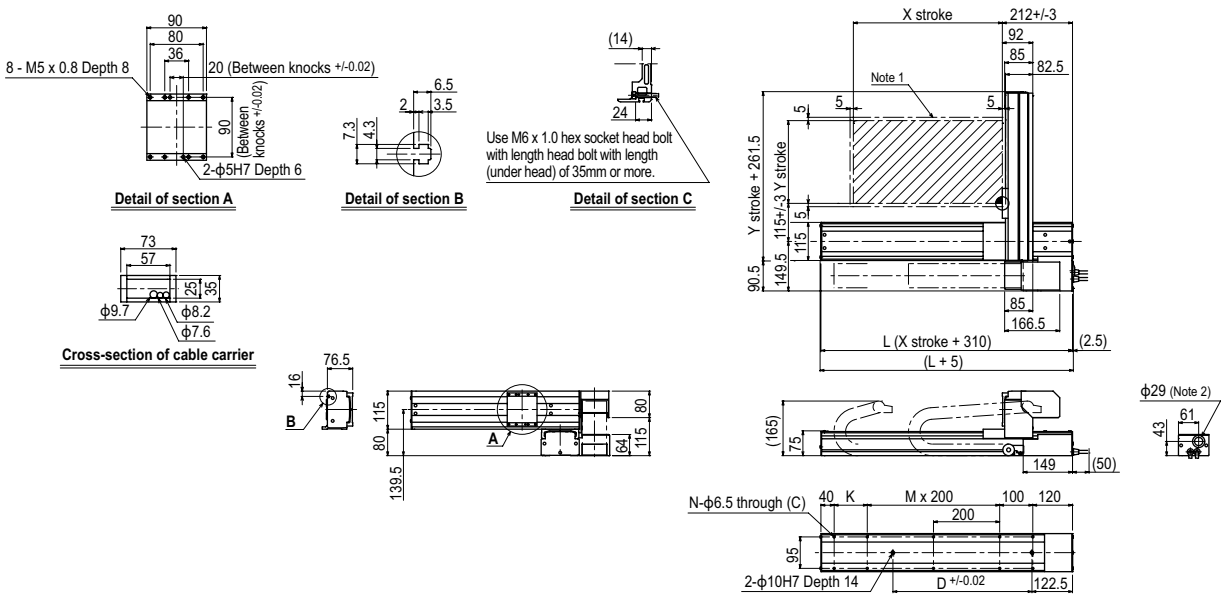

FXYx 2 axes A4

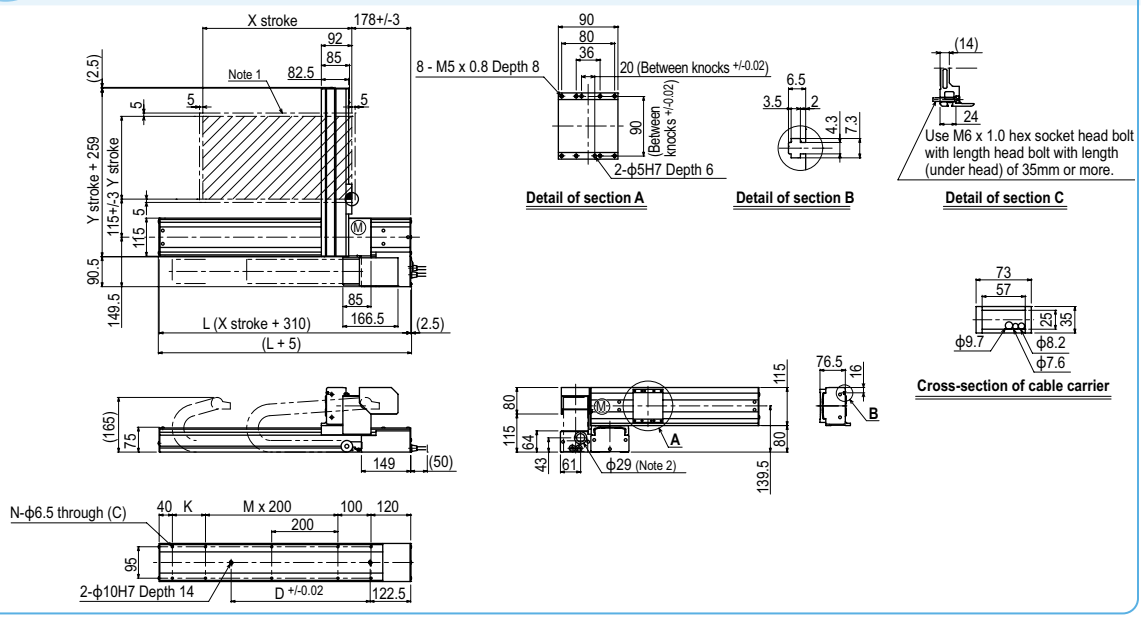

FXYx 2 axes / IO

Arm type | Cable carrier | Type with Y-axis I/O cable carrier added

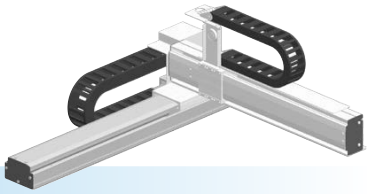

Ordering method

FXYx -	C -	[ ] -	[ ] -	[ ] -	IO -	[ ] -	RCX320-2 -	[ ] -	[ ] -	[ ] -	[ ] -	[ ]
Model	Cable	Combination	X-axis stroke	Y-axis stroke	ZR-axis	Cable	Controller / Number of controllable axes	Safety standard	Option A (OP.A)	Option B (OP.B)	Vision System	Absolute battery
		A1 A2 A3 A4	15 to 105cm	15 to 55cm		3L: 3.5m 5L: 5m 10L: 10m						

Specify various controller setting items. RCX320 ▶ P.626

Specification

	X-axis	Y-axis
Axis construction	–	–
AC servo motor output (W)	100	60
Repeatability Note 1 (mm)	+/-0.01	+/-0.02
Drive system	Ball screw ϕ15	Ball screw ϕ12
Ball screw lead Note 2 (Deceleration ratio) (mm)	20	12
Maximum speed Note 3 (mm/sec)	1200	800
Moving range (mm)	150 to 1050	150 to 550
Robot cable length (m)	Standard: 3.5 Option: 5,10	

Note 1. Positioning repeatability in one direction.
Note 2. Leads not listed in the catalog are also available. Contact us for details.
Note 3. When the X-axis stroke is longer than 750mm, resonance of the ball screw may occur depending on the operation conditions (critical speed). In this case, reduce the speed setting on the program by referring to the maximum speeds shown in the table below.

Maximum payload (kg)

Y stroke (mm)	XY 2 axes
150	12
250	12
350	11
450	9
550	7

Controller

Controller	Operation method
RCX320	Programming / I/O point trace / Remote command / Operation using RS-232C communication

FXYx 2 axes / IO A1

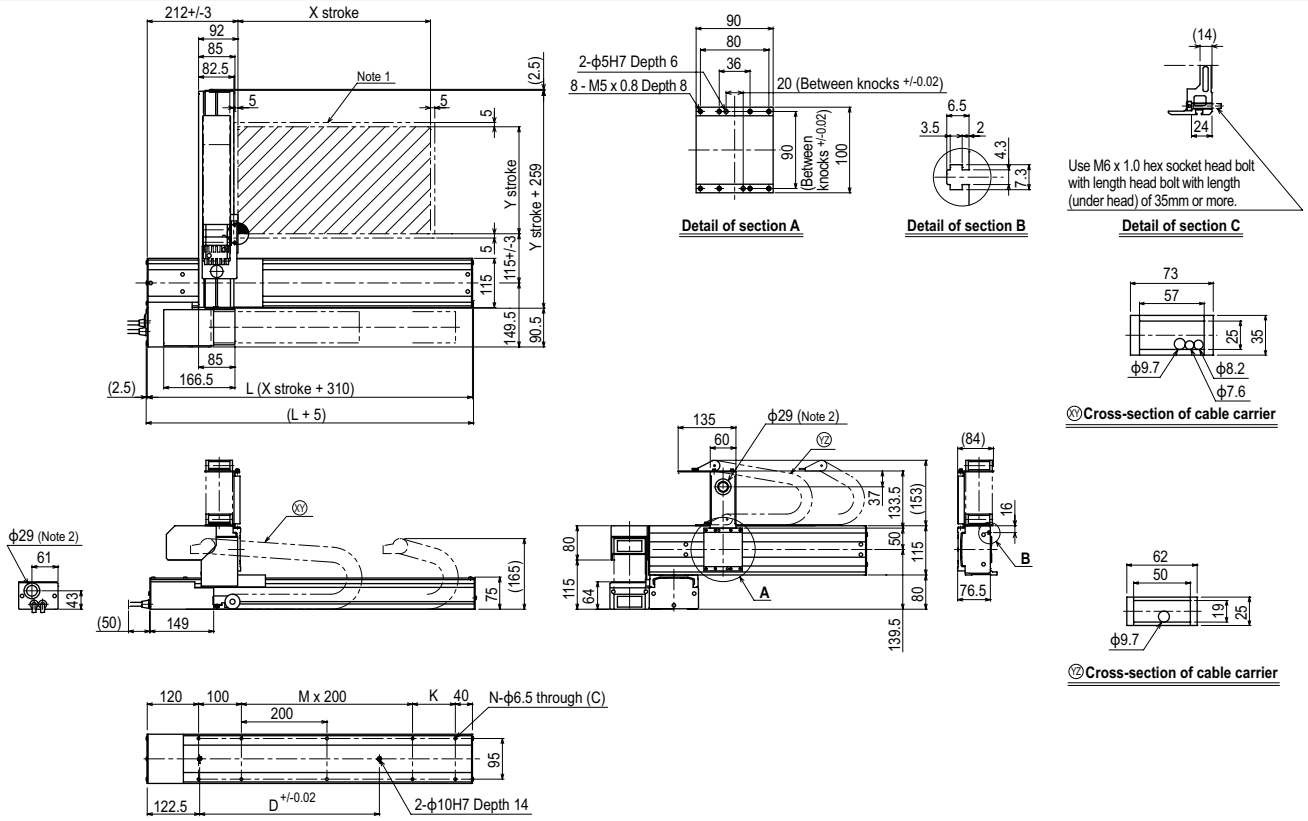

X stroke	150	250	350	450	550	650	750	850	950	1050
L	460	560	660	760	860	960	1060	1160	1260	1360
K	200	100	200	100	200	100	200	100	200	100
D	240	240	420	420	600	600	780	960	960	1140
M	0	1	1	2	2	3	3	4	4	5
N	6	8	8	10	10	12	12	14	14	16

Y stroke	150	250	350	450	550

Maximum speed for each stroke (mm/sec) Note 3						
X-axis	1200	960	780	600	540
Speed setting	–	80%	65%	50%	45%

Note 1. The moving range when returning to origin and the stop position when stopping by the mechanical stopper.
Note 2. User cable extraction port.

Note 3. When the X-axis stroke is longer than 750mm, resonance of the ball screw may occur depending on the operation conditions (critical speed). In this case, reduce the speed setting on the program by referring to the maximum speeds shown in the table at the left.

FXYx 3 axes / ZS

Arm type | Cable carrier | Z-axis shaft vertical type

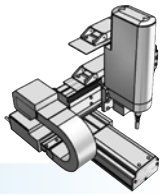

Ordering method

FXYx - C - [ ] - [ ] - [ ] - [ ] - 15 - [ ] - RCX340-3 - [ ] - [ ] - [ ] - [ ] - [ ] - [ ] - [ ]

Model	Cable	Combination	X-axis stroke	Y-axis stroke	ZR-axis	Z-axis stroke	Cable	Controller / Number of controllable axes	Safety standard	Option A (OP.A)	Option B (OP.B)	Option C (OP.C)	Option D (OP.D)	Option E (OP.E)	Absolute battery
		A1 A2 A3 A4	15 to 105cm	15 to 55cm	ZS12 ZS6		3L: 3.5m 5L: 5m 10L: 10m								

Specify various controller setting items. RCX340 ▶ P.636

Specification

	X-axis	Y-axis	Z-axis: ZS12	Z-axis: ZS6
Axis construction	–	–	–	
AC servo motor output (W)	100	60	60	
Repeatability Note 1 **(mm)**	+/-0.01	+/-0.02	+/-0.02	
Drive system	Ball screw ϕ15	Ball screw ϕ12	Ball screw ϕ12	
Ball screw lead Note 2 **(Deceleration ratio) (mm)**	20	12	12	6
Maximum speed Note 3 **(mm/sec)**	1200	800	1000	500
Moving range (mm)	150 to 1050	150 to 550	150	
Robot cable length (m)	Standard: 3.5 Option: 5,10			

Note 1. Positioning repeatability in one direction.
Note 2. Leads not listed in the catalog are also available. Contact us for details.
Note 3. When the X-axis stroke is longer than 750mm, resonance of the ball screw may occur depending on the operation conditions (critical speed). In this case, reduce the speed setting on the program by referring to the maximum speeds shown in the table below.

Maximum payload (kg)

Y stroke (mm)	ZS12	ZS6
150	3	5
250	3	5
350	3	5
450	3	5
550	3	3

Controller

Controller	Operation method
RCX340	Programming / I/O point trace / Remote command / Operation using RS-232C communication

FXYx 3 axes / ZS A1

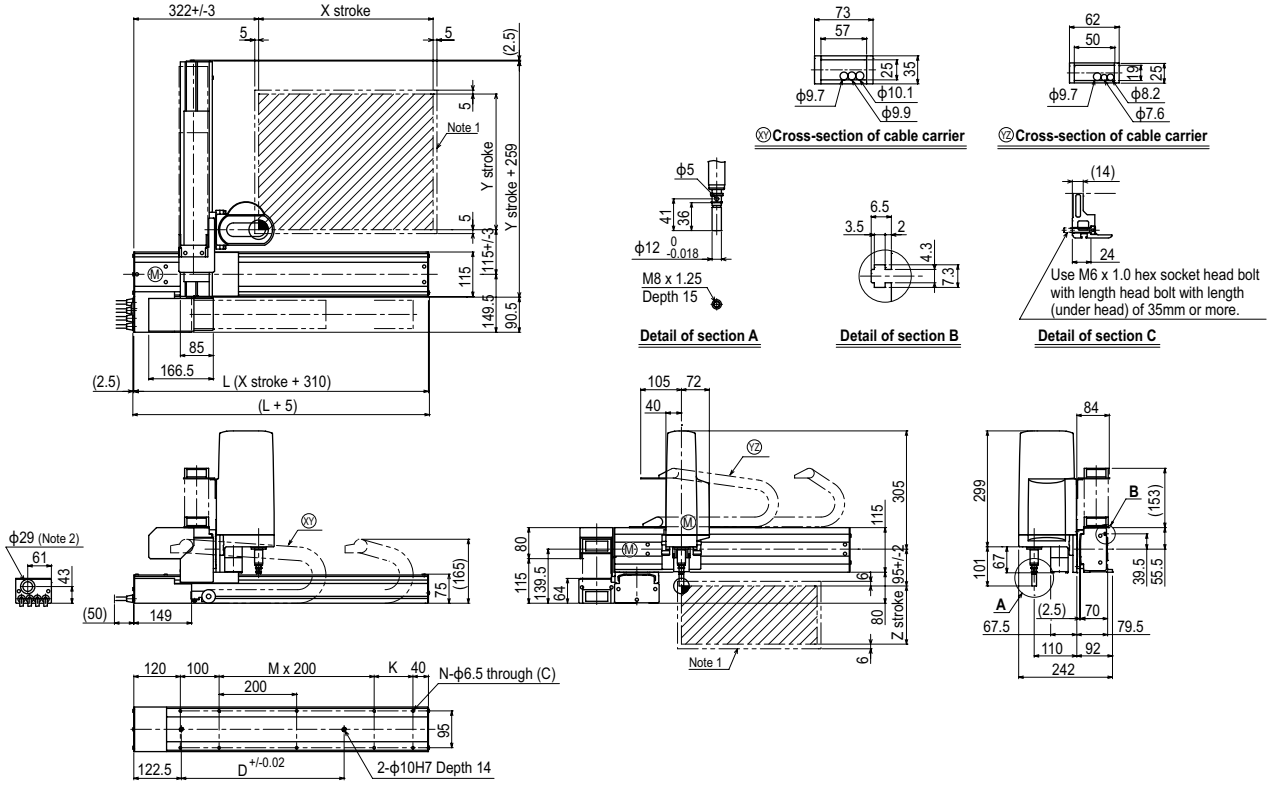

X stroke	150	250	350	450	550	650	750	850	950	1050
L	460	560	660	760	860	960	1060	1160	1260	1360
K	200	100	200	100	200	100	200	100	200	100
D	240	240	420	420	600	600	780	960	960	1140
M	0	1	1	2	2	3	3	4	4	5
N	6	8	8	10	10	12	12	14	14	16

Y stroke	150	250	350	450	550
Z stroke	150				

Maximum speed for each stroke (mm/sec) Note 3						
X-axis	1200	960	780	600	540
Speed setting	–	80%	65%	50%	45%

Note 1. The moving range when returning to origin and the stop position when stopping by the mechanical stopper.
Note 2. User cable extraction port.
Note 3. When the X-axis stroke is longer than 750mm, resonance of the ball screw may occur depending on the operation conditions (critical speed). In this case, reduce the speed setting on the program by referring to the maximum speeds shown in the table at the left.

Controller RCX340 ▶ 636

FXYx 3 axes / ZT

Arm type | Cable carrier | Z-axis: clamped base / moving table type (60W)

Ordering method

FXYx - C - [ ] - [ ] - [ ] - ZT6L - 12 - [ ] - [ ] - RCX340-3 - [ ] - [ ] - [ ] - [ ] - [ ] - [ ] - [ ]

Model	Cable	Combination	X-axis stroke	Y-axis stroke	ZR-axis	Lead	Z-axis stroke	Cable	Controller / Number of controllable axes	Safety standard	Option A (OP.A)	Option B (OP.B)	Option C (OP.C)	Option D (OP.D)	Option E (OP.E)	Absolute battery
		A1 A2 A3 A4	15 to 105cm	15 to 55cm			5 to 30cm	3L: 3.5m 5L: 5m 10L: 10m								

Specify various controller setting items. RCX340 ▶ P.636

Specification

	X-axis	Y-axis	Z-axis
Axis construction Note 1	–	–	T6L-12-BK
AC servo motor output (W)	100	60	60
Repeatability Note 2 (mm)	+/-0.01	+/-0.02	+/-0.02
Drive system	Ball screw ϕ15	Ball screw ϕ12	Ball screw ϕ12
Ball screw lead Note 3 (Deceleration ratio) (mm)	20	12	12
Maximum speed Note 4 (mm/sec)	1200	800	800
Moving range (mm)	150 to 1050	150 to 550	50 to 300
Robot cable length (m)	Standard: 3.5 Option: 5,10		

Note 1.Use caution that the flame machining (installation holes, tap holes) differs from single-axis robots'.
Note 2.Positioning repeatability in one direction.
Note 3. Leads not listed in the catalog are also available. Contact us for details.
Note 4. When the X-axis stroke is longer than 750mm, resonance of the ball screw may occur depending on the operation conditions (critical speed). In this case, reduce the speed setting on the program by referring to the maximum speeds shown in the table below.

Maximum payload (kg)

Y stroke (mm)	ZT
150 to 550	3

Controller

Controller	Operation method
RCX340	Programming / I/O point trace / Remote command / Operation using RS-232C communication

FXYx 3 axes / ZT A1

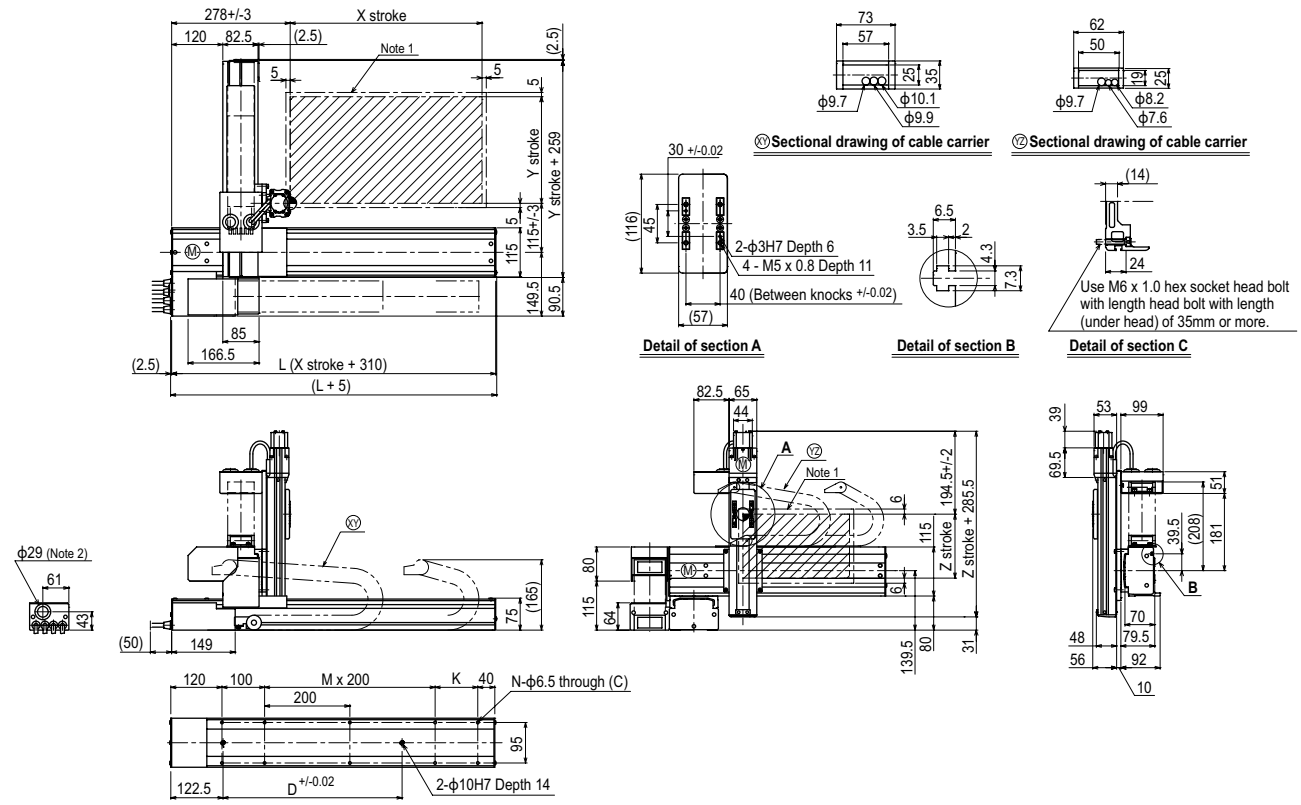

X stroke	150	250	350	450	550	650	750	850	950	1050
L	460	560	660	760	860	960	1060	1160	1260	1360
K	200	100	200	100	200	100	200	100	200	100
D	240	240	420	420	600	600	780	960	960	1140
M	0	1	1	2	2	3	3	4	4	5
N	6	8	8	10	10	12	12	14	14	16

Y stroke	150	250	350	450	550

Z stroke	50	100	150	200	250	300

Maximum speed for each stroke (mm/sec) Note 3						
X-axis	1200	960	780	600	540
Speed setting	–	80%	65%	50%	45%

Note 1. The moving range when returning to origin and the stop position when stopping by the mechanical stopper.
Note 2. User cable extraction port.

Note 3. When the X-axis stroke is longer than 750mm, resonance of the ball screw may occur depending on the operation conditions (critical speed). In this case, reduce the speed setting on the program by referring to the maximum speeds shown in the table at the left.

Controller RCX340 ▶ 636

MEMO

FXYBx 2 axes

Arm type Cable carrier

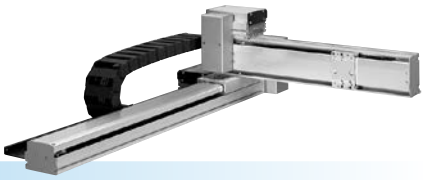

Ordering method

FXYBx -	C	-		-		-		-	RCX320-2	-		-		-		-	
Model	Cable	Combination	X-axis stroke	Y-axis stroke	Cable	Controller / Number of controllable axes	Safety standard	Option A (OP.A)	Option B (OP.B)	Vision System	Absolute battery
		A1 A2 A3 A4	15 to 245cm	15 to 55cm	3L: 3.5m 5L: 5m 10L: 10m						

Specify various controller setting items. RCX320 ▶ P.626

Specification

	X-axis	Y-axis
Axis construction Note 1	B10	–
AC servo motor output (W)	100	100
Repeatability Note 2 (mm)	+/-0.04	+/-0.04
Drive system	Timing belt	Timing belt
Ball screw lead Note 3 (Deceleration ratio) (mm)	Equivalent to lead 25	Equivalent to lead 25
Maximum speed (mm/sec)	1875	1875
Moving range (mm)	150 to 2450	150 to 550
Robot cable length (m)	Standard: 3.5 Option: 5,10	

Note 1.Use caution that the flame machining (installation holes, tap holes) differs from single-axis robots'.
Note 2.Positioning repeatability in one direction.
Note 3. Leads not listed in the catalog are also available. Contact us for details.

Maximum payload (kg)

Y stroke (mm)	XY axes
150	7
250	6
350	5
450	5
550	3

Controller

Controller	Operation method
RCX320	Programming / I/O point trace / Remote command / Operation using RS-232C communication

FXYBx 2 axes A1

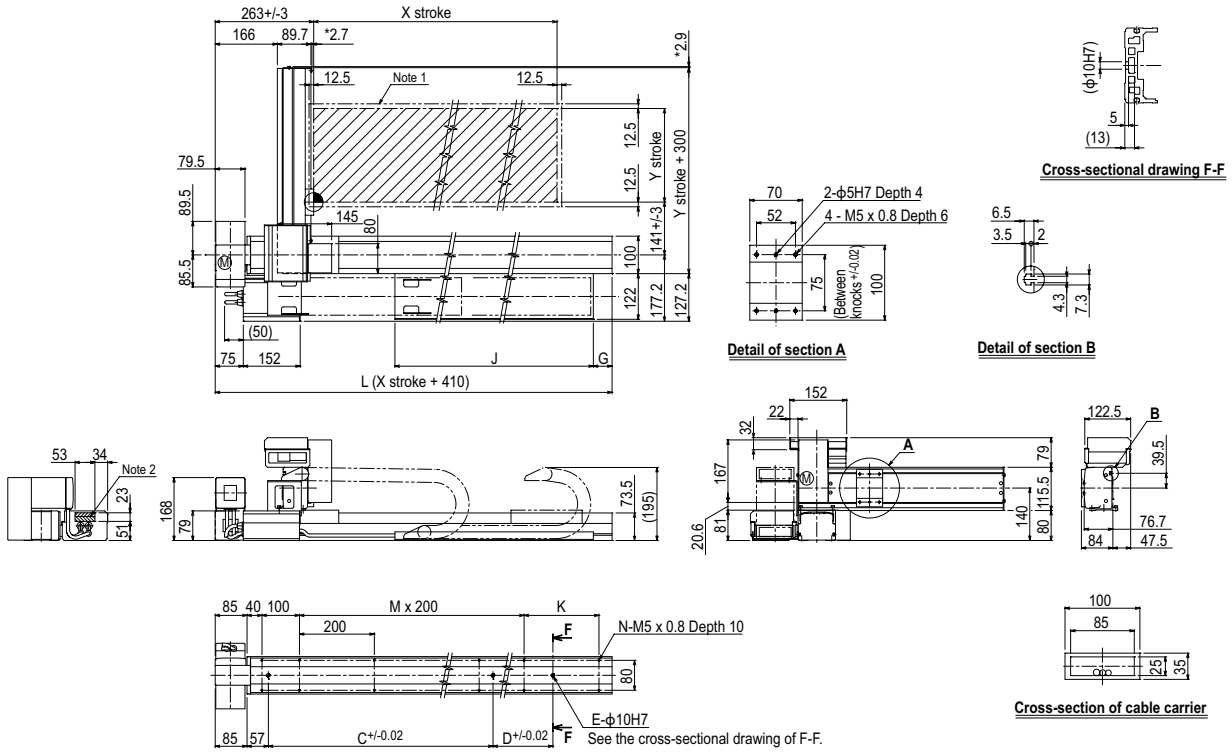

Note 1.The moving range when returning to origin and the stop position when stopping by the mechanical stopper.
Note 2.The shaded position indicates an user cable extraction port.
Note 3.The dimension marked with an asterisk (*) indicates the height of the screw.

X stroke	150	250	350	450	550	650	750	850	950	1050	1150	1250	1350	1450	1550	1650	1750	1850	1950	2050	2150	2250	2350	2450
L	560	660	760	860	960	1060	1160	1260	1360	1460	1560	1660	1760	1860	1960	2060	2160	2260	2360	2460	2560	2660	2760	2860
C	240	420	600	600	780	780	960	960	1140	1140	1320	1320	1320	1320	1320	1320	1320	1320	1320	1320	1320	1320	1320	1320
D	–	–	–	–	–	–	–	–	–	–	–	–	240	240	420	420	600	780	780	960	960	1140	1140	1320
E	2	2	2	2	2	2	2	2	2	2	2	2	3	3	3	3	3	3	3	3	3	3	3	3
G	0	50	0	50	0	50	0	50	0	50	0	50	0	50	0	50	0	50	0	50	0	50	0	50
J	330	330	430	430	530	530	630	630	730	730	830	830	930	930	1030	1030	1130	1130	1230	1230	1330	1330	1430	1430
K	100	200	100	200	100	200	100	200	100	200	100	200	100	200	100	200	100	200	100	200	100	200	100	200
M	1	1	2	2	3	3	4	4	5	5	6	6	7	7	8	8	9	9	10	10	11	11	12	12
N	8	8	10	10	12	12	14	14	16	16	18	18	20	20	22	22	24	24	26	26	28	28	30	30

Y stroke	150	250	350	450	550

Controller RCX320 ▶ 626

FXYBx 2 axes A2

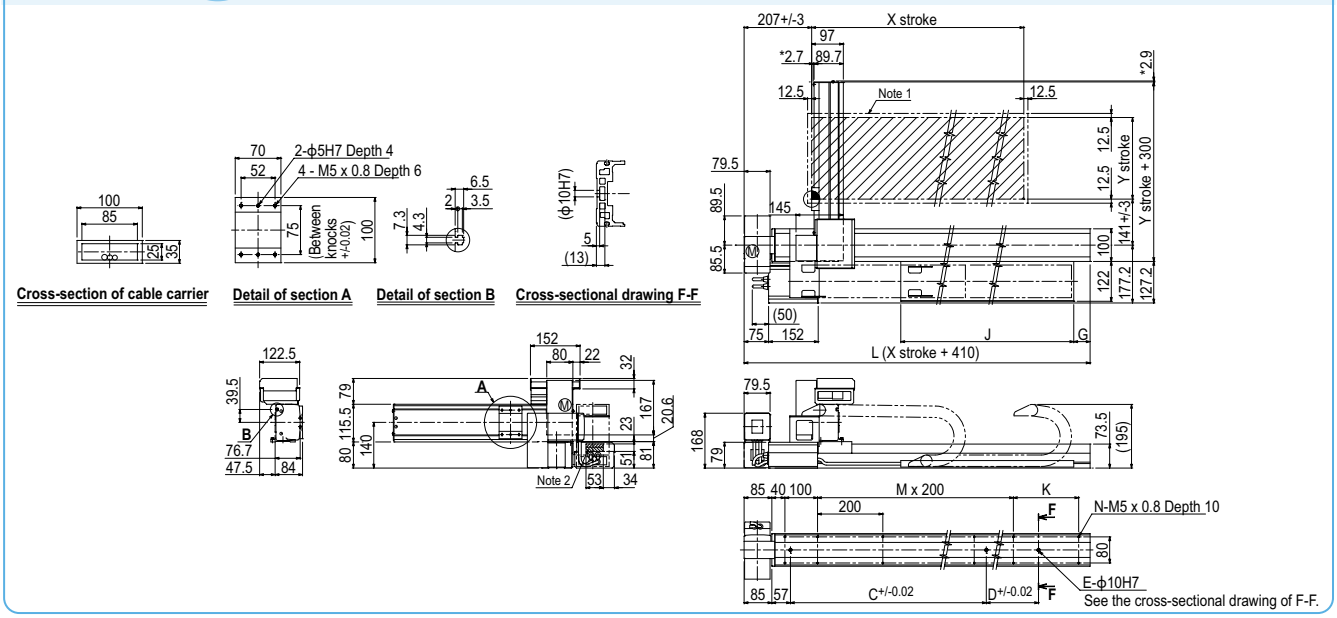

FXYBx 2 axes A3

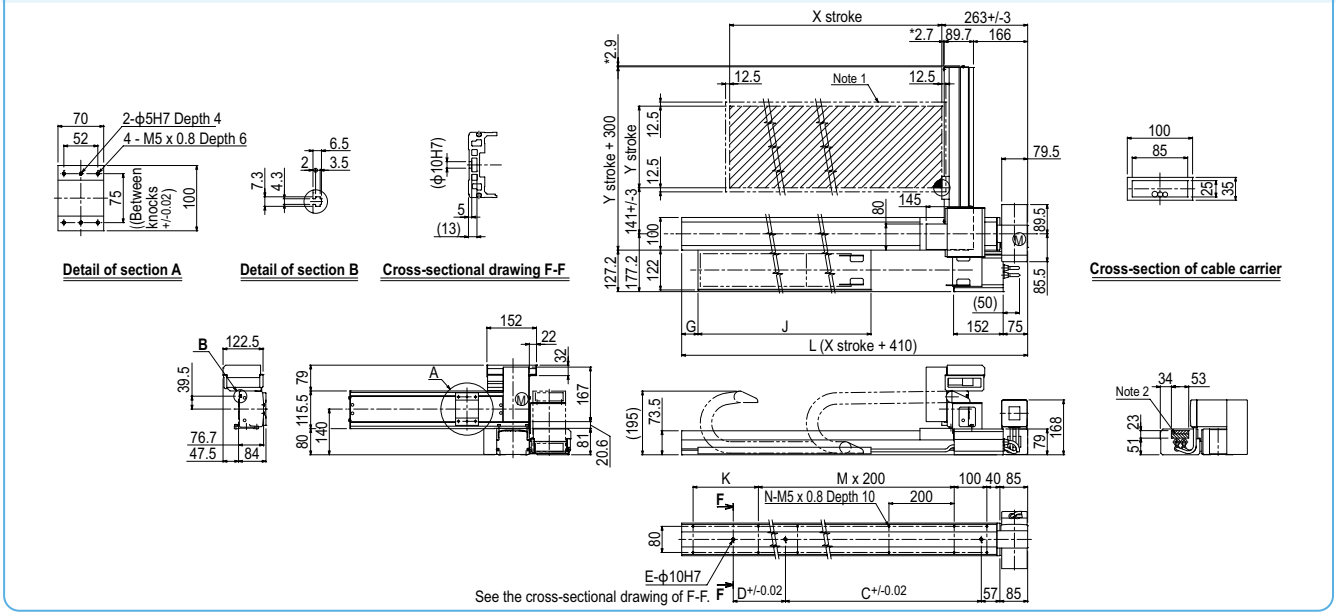

FXYBx 2 axes A4

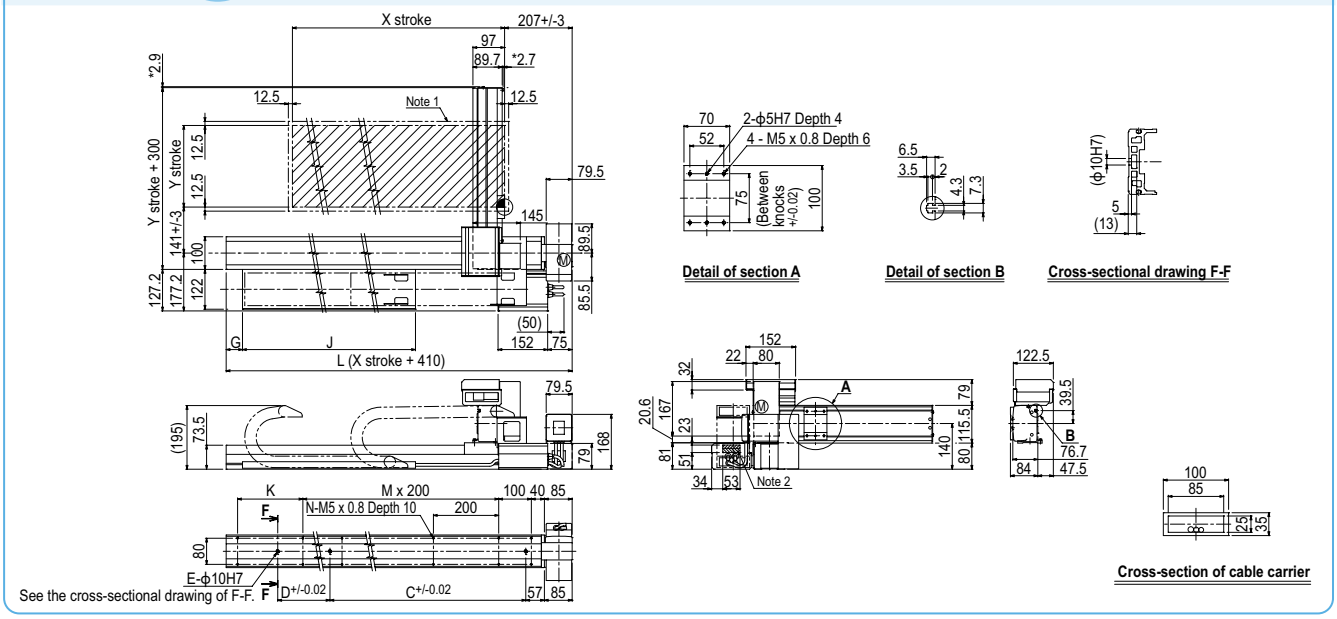

FXYBx 2 axes

Arm type Whipover

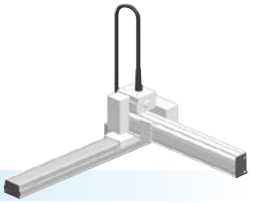

Ordering method

FXYBx - S - [ ] - [ ] - [ ] - [ ] - RCX320-2 - [ ] - [ ] - [ ] - [ ] - [ ]

Model	Cable	Combination	X-axis stroke	Y-axis stroke	Cable	Controller / Number of controllable axes	Safety standard	Option A (OP.A)	Option B (OP.B)	Vision System	Absolute battery
		A1 A2 A3 A4	15 to 95cm	15 to 55cm	3L: 3.5m 5L: 5m 10L: 10m						

Specify various controller setting items. RCX320 ▶ P.626

Specification

	X-axis	Y-axis
Axis construction Note 1	B10	–
AC servo motor output (W)	100	100
Repeatability Note 2 (mm)	+/-0.04	+/-0.04
Drive system	Timing belt	Timing belt
Ball screw lead Note 3 (Deceleration ratio) (mm)	Equivalent to lead 25	Equivalent to lead 25
Maximum speed (mm/sec)	1875	1875
Moving range (mm)	150 to 950	150 to 550
Robot cable length (m)	Standard: 3.5 Option: 5,10	

Note 1. Use caution that the flame machining (installation holes, tap holes) differs from single-axis robots'.
Note 2. Positioning repeatability in one direction.
Note 3. Leads not listed in the catalog are also available. Contact us for details.

Maximum payload (kg)

Y stroke (mm)	XY 2 axes
150	7
250	6
350	5
450	5
550	3

Controller

Controller	Operation method
RCX320	Programming / I/O point trace / Remote command / Operation using RS-232C communication

FXYBx 2 axes A1

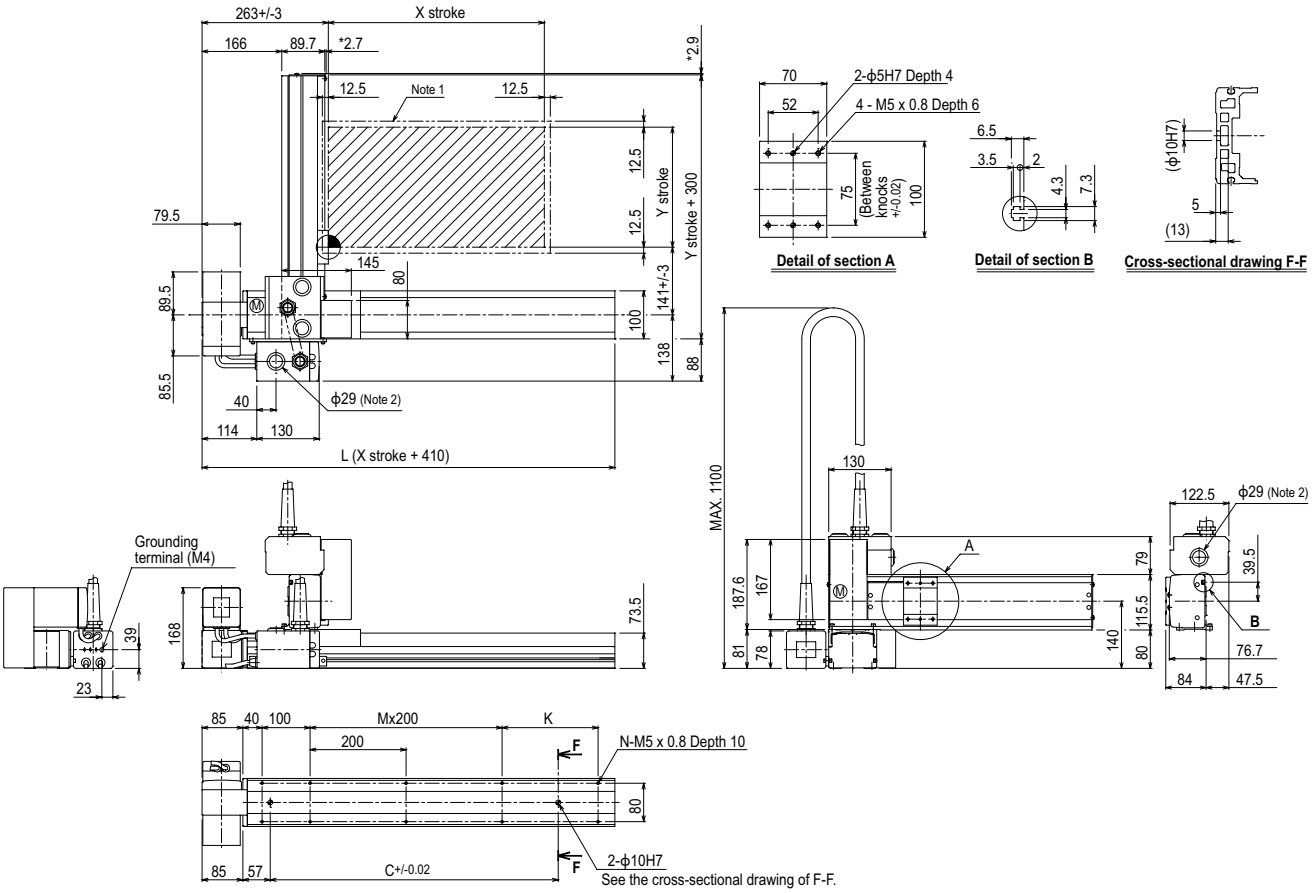

X stroke	150	250	350	450	550	650	750	850	950
L	560	660	760	860	960	1060	1160	1260	1360
C	240	420	600	600	780	780	960	960	1140
K	100	200	100	200	100	200	100	200	100
M	1	1	2	2	3	3	4	4	5
N	8	8	10	10	12	12	14	14	16

Y stroke	150	250	350	450	550

Note 1. The moving range when returning to origin and the stop position when stopping by the mechanical stopper.
Note 2. User cable extraction port.
Note 3. The dimension marked with an asterisk (*) indicates the height of the screw.

FXYBx 2 axes A2

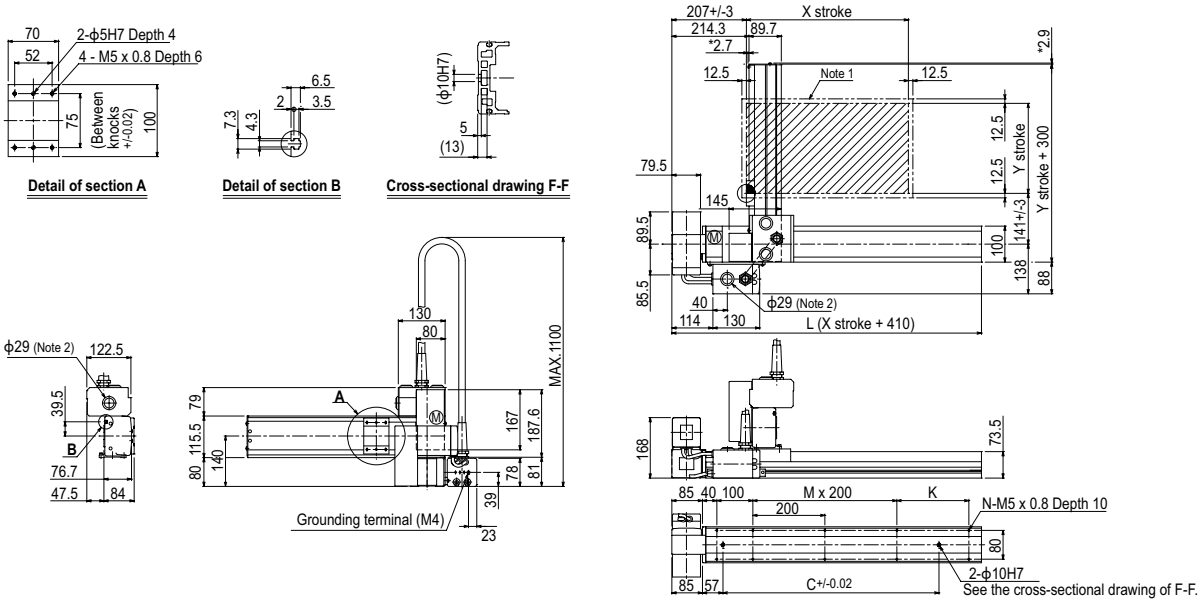

FXYBx 2 axes A3

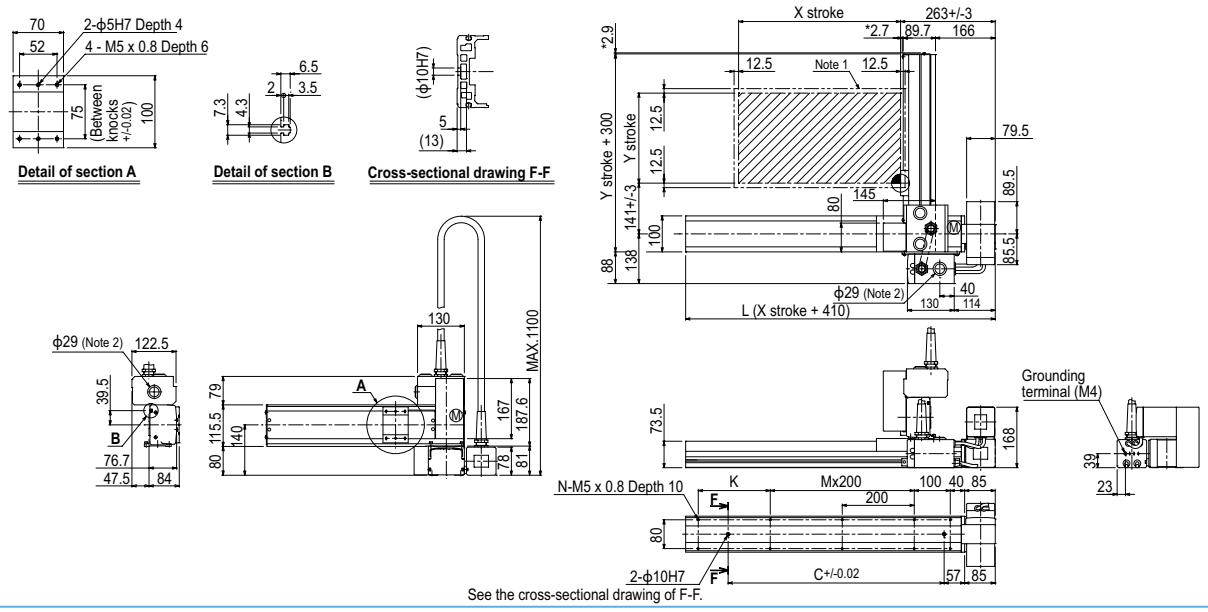

FXYBx 2 axes A4

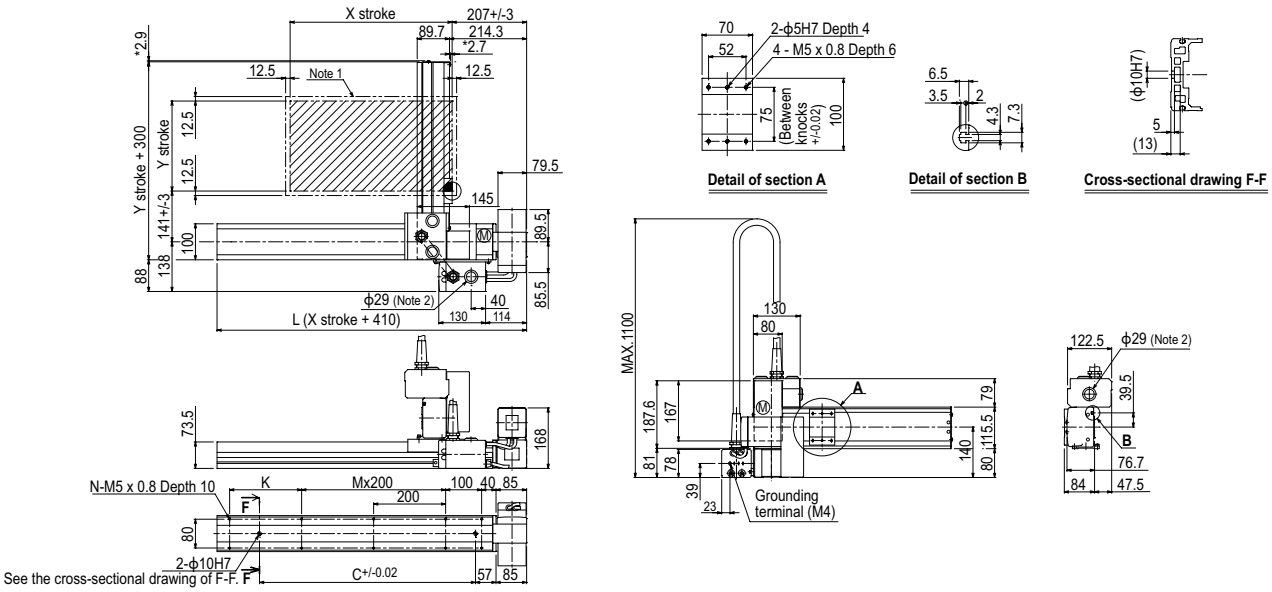

FXYBx 2 axes / IO

Arm type | Cable carrier | Type with Y-axis I/O cable carrier added

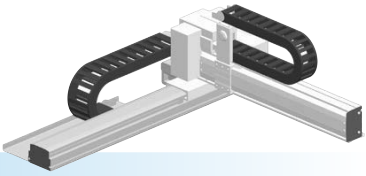

Ordering method

FXYBx	- C	- [ ]	- [ ]	- [ ]	- IO	- [ ]	- RCX320-2	- [ ]	- [ ]	- [ ]	- [ ]	- [ ]
Model	Cable	Combination	X-axis stroke	Y-axis stroke	ZR-axis	Cable	Controller / Number of controllable axes	Safety standard	Option A (OP.A)	Option B (OP.B)	Vision System	Absolute battery
		A1 A2 A3 A4	15 to 245cm	15 to 55cm		3L: 3.5m 5L: 5m 10L: 10m						

Specify various controller setting items. RCX320 ▶ P626

Specification

	X-axis	Y-axis
Axis construction Note 1	B10	–
AC servo motor output (W)	100	100
Repeatability Note 2 (mm)	+/-0.04	+/-0.04
Drive system	Timing belt	Timing belt
Ball screw lead Note 3 (Deceleration ratio) (mm)	Equivalent to lead 25	Equivalent to lead 25
Maximum speed (mm/sec)	1875	1875
Moving range (mm)	150 to 2450	150 to 550
Robot cable length (m)	Standard: 3.5 Option: 5,10	

Note 1.Use caution that the flame machining (installation holes, tap holes) differs from single-axis robots'.
Note 2.Positioning repeatability in one direction.
Note 3.Leads not listed in the catalog are also available. Contact us for details.

Maximum payload (kg)

Y stroke (mm)	XY 2 axes
150	7
250	6
350	5
450	5
550	3

Controller

Controller	Operation method
RCX320	Programming / I/O point trace / Remote command / Operation using RS-232C communication

FXYBx 2 axes / IO A1

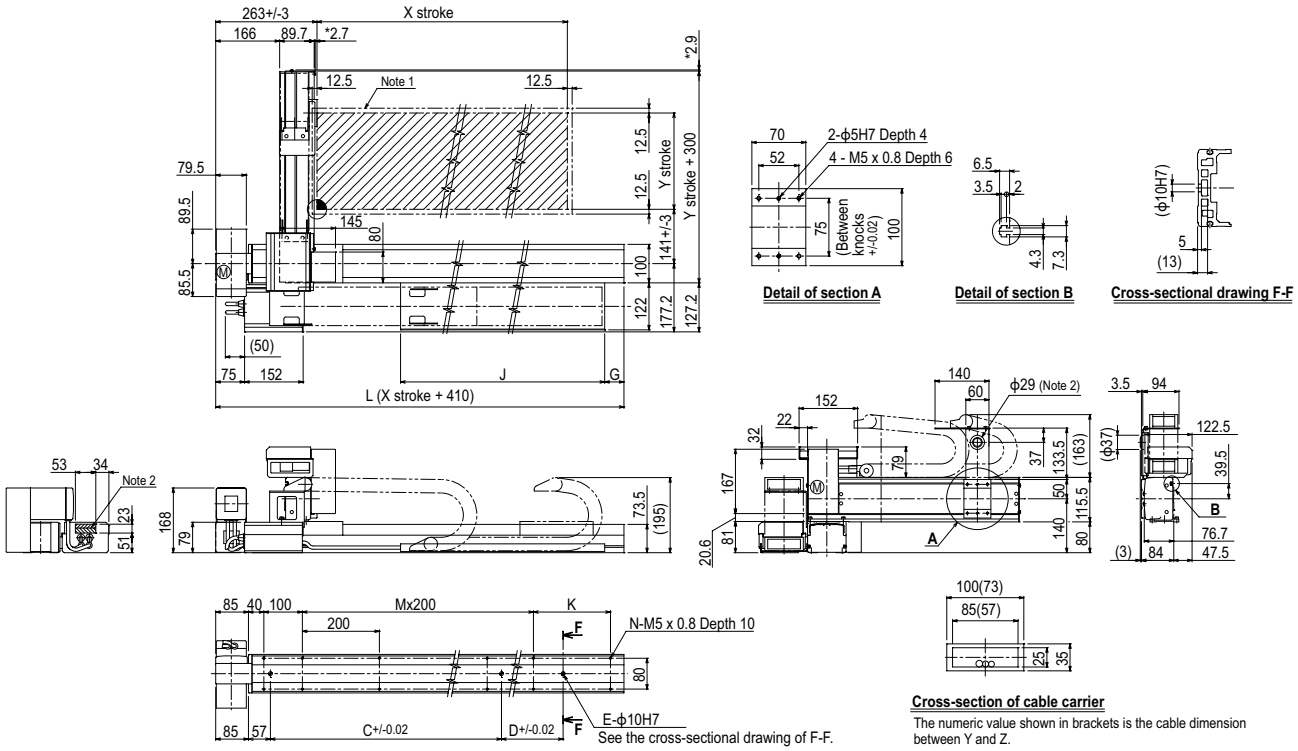

The numeric value shown in brackets is the cable dimension between Y and Z.

Note 1.The moving range when returning to origin and the stop position when stopping by the mechanical stopper.
Note 2.The shaded position indicates an user cable extraction port.
Note 3.The dimension marked with an asterisk (*) indicates the height of the screw.

X stroke	150	250	350	450	550	650	750	850	950	1050	1150	1250	1350	1450	1550	1650	1750	1850	1950	2050	2150	2250	2350	2450
L	560	660	760	860	960	1060	1160	1260	1360	1460	1560	1660	1760	1860	1960	2060	2160	2260	2360	2460	2560	2660	2760	2860
C	240	420	600	600	780	780	960	960	1140	1140	1320	1320	1320	1320	1320	1320	1320	1320	1320	1320	1320	1320	1320	1320
D	–	–	–	–	–	–	–	–	–	–	–	–	240	240	420	420	600	780	780	960	960	1140	1140	1320
E	2	2	2	2	2	2	2	2	2	2	2	2	3	3	3	3	3	3	3	3	3	3	3	3
G	0	50	0	50	0	50	0	50	0	50	0	50	0	50	0	50	0	50	0	50	0	50	0	50
J	330	330	430	430	530	530	630	630	730	730	830	830	930	930	1030	1030	1130	1130	1230	1230	1330	1330	1430	1430
K	100	200	100	200	100	200	100	200	100	200	100	200	100	200	100	200	100	200	100	200	100	200	100	200
M	1	1	2	2	3	3	4	4	5	5	6	6	7	7	8	8	9	9	10	10	11	11	12	12
N	8	8	10	10	12	12	14	14	16	16	18	18	20	20	22	22	24	24	26	26	28	28	30	30

Y stroke	150	250	350	450	550

Controller RCX320 ▶ 626

MEMO

SXYx 2 axes

Arm type Cable carrier

Ordering method

SXYx - C	-		-		-		-	RCX320-2	-		-		-		-	
Model	Cable	Combination	X-axis stroke	Y-axis stroke	Cable	Controller / Number of controllable axes	Safety standard	Option A (OP.A)	Option B (OP.B)	Vision System	Absolute battery
		A1 A2 A3 A4	15 to 105cm	15 to 65cm	3L: 3.5m 5L: 5m 10L: 10m						

Specify various controller setting items. RCX320 ▶ P.626

Specification

	X-axis	Y-axis
Axis construction Note 1	F14H	F14
AC servo motor output (W)	200	100
Repeatability Note 2 (mm)	+/-0.01	+/-0.01
Drive system	Ball screw ϕ15	Ball screw ϕ15
Ball screw lead Note 3 (Deceleration ratio) (mm)	20	20
Maximum speed Note 4 (mm/sec)	1200	1200
Moving range (mm)	150 to 1050	150 to 650
Robot cable length (m)	Standard: 3.5 Option: 5,10	

Note 1. Use caution that the flame machining (installation holes, tap holes) differs from single-axis robots'.
Note 2. Positioning repeatability in one direction.
Note 3.Leads not listed in the catalog are also available. Contact us for details.
Note 4. When the X-axis stroke is longer than 750mm, resonance of the ball screw may occur depending on the operation conditions (critical speed). In this case, reduce the speed setting on the program by referring to the maximum speeds shown in the table below.

Maximum payload (kg)

Y stroke (mm)	XY 2 axes
150	20
250	17
350	15
450	13
550	11
650	9

Controller

Controller	Operation method
RCX320	Programming / I/O point trace / Remote command / Operation using RS-232C communication

SXYx 2 axes A1

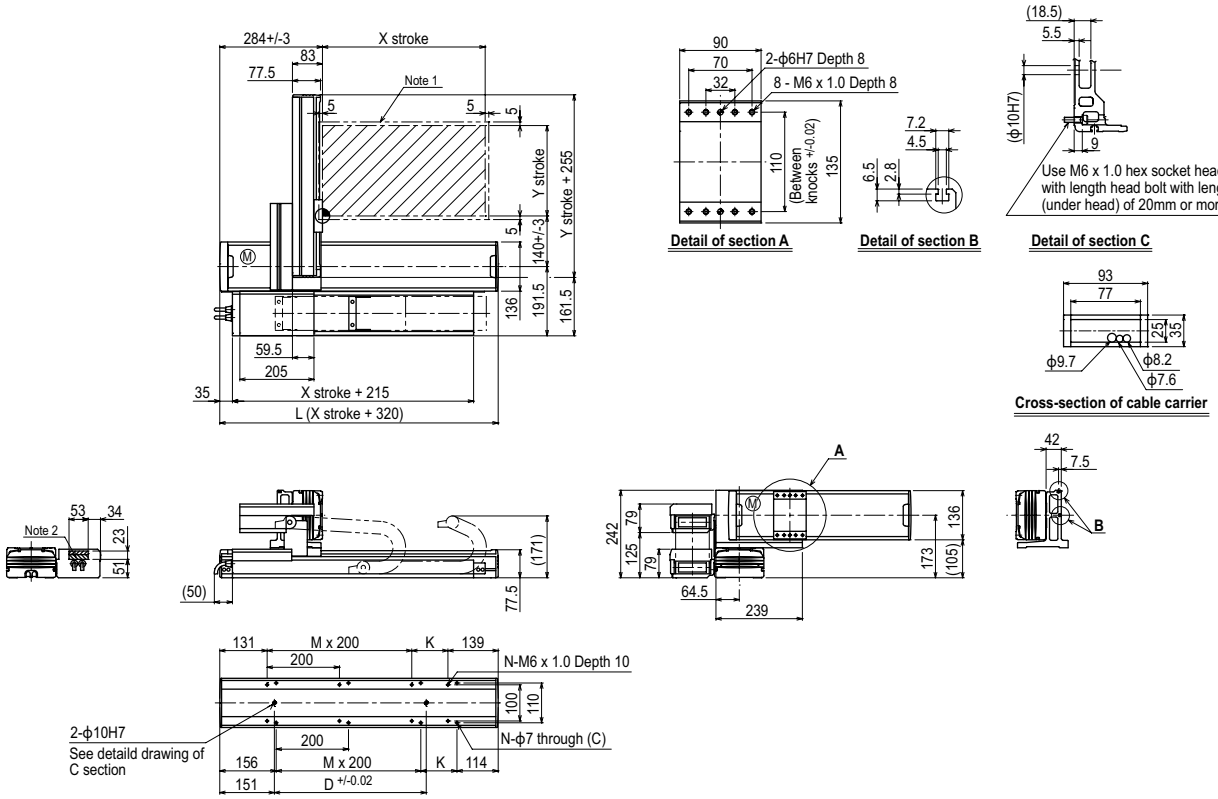

X stroke	150	250	350	450	550	650	750	850	950	1050
L	470	570	670	770	870	970	1070	1170	1270	1370
K	200	100	200	100	200	100	200	100	200	100
D	240	240	420	420	600	600	780	960	960	1140
M	0	1	1	2	2	3	3	4	4	5
N	4	6	6	8	8	10	10	12	12	14

Y stroke	150	250	350	450	550	650
Maximum speed for each stroke (mm/sec) Note 3 — X-axis	1200					
Maximum speed for each stroke (mm/sec) Note 3 — Speed setting	–					

X stroke	750	850	950	1050
Maximum speed for each stroke (mm/sec) Note 3 — X-axis	960	780	600	540
Maximum speed for each stroke (mm/sec) Note 3 — Speed setting	80%	65%	50%	45%

Note 1. The moving range when returning to origin and the stop position when stopping by the mechanical stopper.
Note 2. The shaded position indicates an user cable extraction port.

Note 3. When the X-axis stroke is longer than 750mm, resonance of the ball screw may occur depending on the operation conditions (critical speed). In this case, reduce the speed setting on the program by referring to the maximum speeds shown in the table at the left.

SXYx 2 axes A2

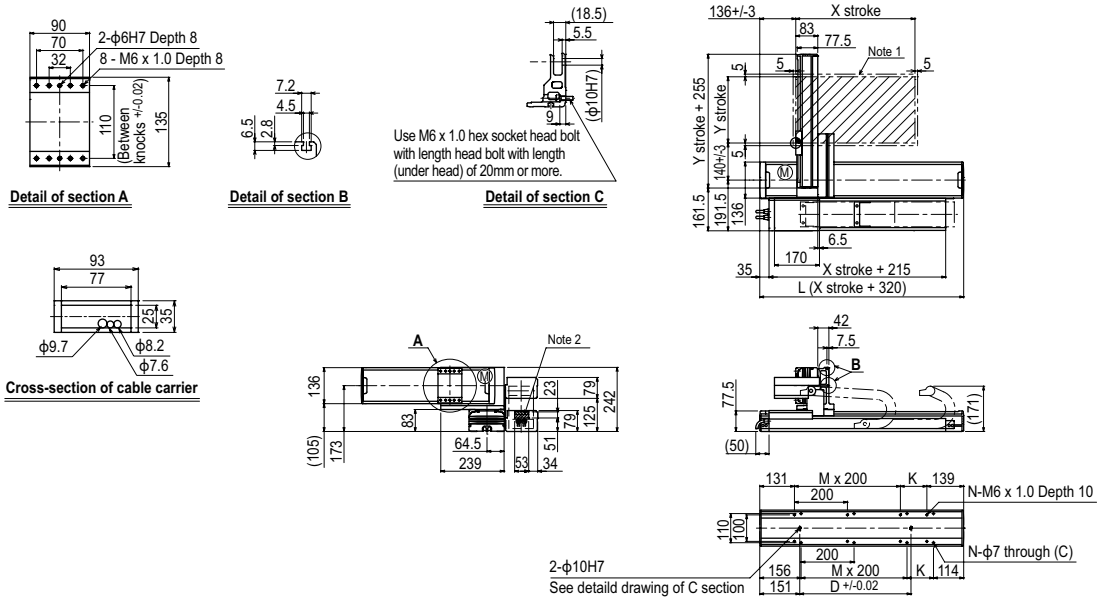

SXYx 2 axes A3

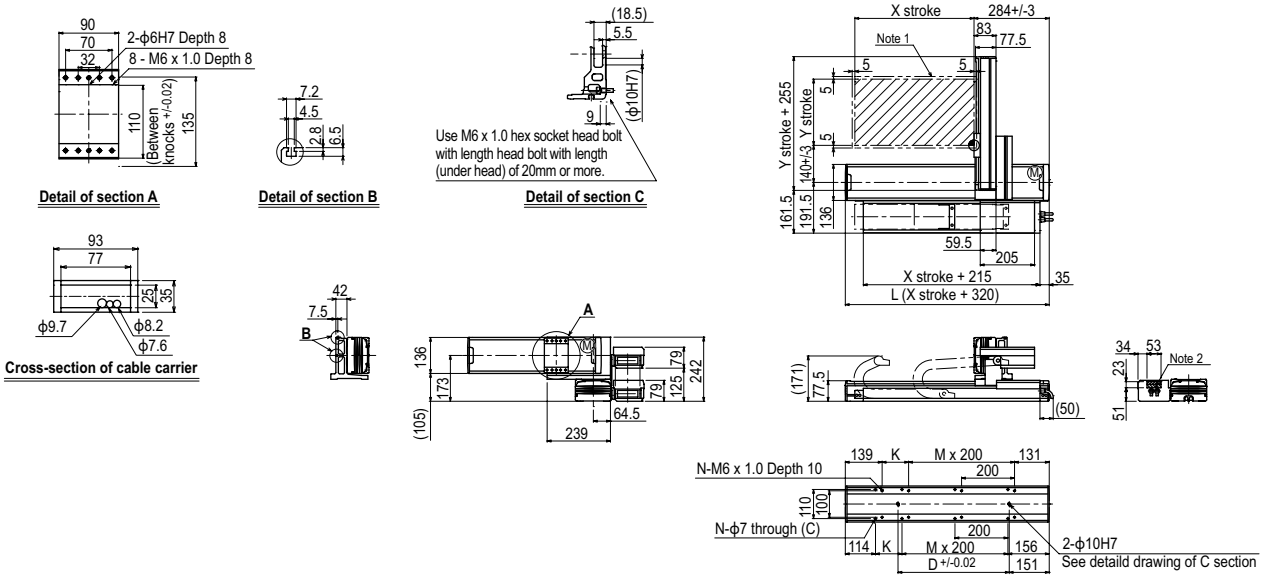

SXYx 2 axes A4

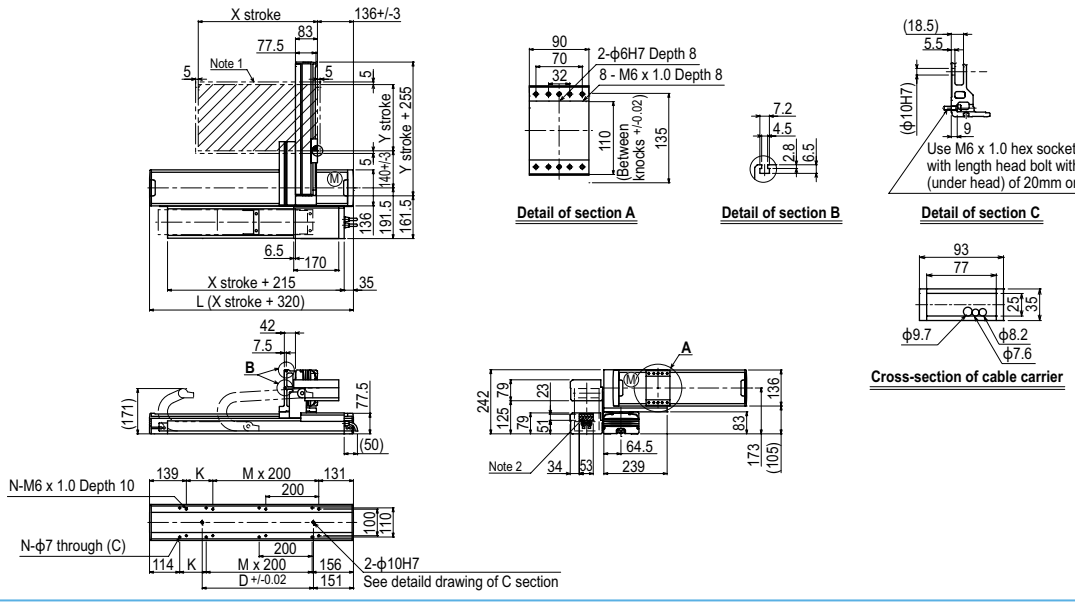

Controller RCX320 ▶ 626

SXYx 2 axes

Arm type Whipover

Ordering method

SXYx - S - [ ] - [ ] - [ ] - [ ] - **RCX320-2** - [ ] - [ ] - [ ] - [ ] - [ ]

Model	Cable	Combination	X-axis stroke	Y-axis stroke	Cable	Controller / Number of controllable axes	Safety standard	Option A (OP.A)	Option B (OP.B)	Vision System	Absolute battery
		A1 A2 A3 A4	15 to 85cm	15 to 65cm	3L: 3.5m 5L: 5m 10L: 10m						

Specify various controller setting items. RCX320 ▶ P.626

Specification

	X-axis	Y-axis
Axis construction Note 1	F14H	F14
AC servo motor output (W)	200	100
Repeatability Note 2 (mm)	+/-0.01	+/-0.01
Drive system	Ball screw ϕ15	Ball screw ϕ15
Ball screw lead Note 3 (Deceleration ratio) (mm)	20	20
Maximum speed Note 4 (mm/sec)	1200	1200
Moving range (mm)	150 to 850	150 to 650
Robot cable length (m)	Standard: 3.5 Option: 5,10	

Note 1. Use caution that the flame machining (installation holes, tap holes) differs from single-axis robots'.
Note 2. Positioning repeatability in one direction.
Note 3. Leads not listed in the catalog are also available. Contact us for details.
Note 4. When the X-axis stroke is longer than 750mm, resonance of the ball screw may occur depending on the operation conditions (critical speed). In this case, reduce the speed setting on the program by referring to the maximum speeds shown in the table below.

Maximum payload (kg)

Y stroke (mm)	XY 2 axes
150	20
250	17
350	15
450	13
550	11
650	9

Controller

Controller	Operation method
RCX320	Programming / I/O point trace / Remote command / Operation using RS-232C communication

SXYx 2 axes A1

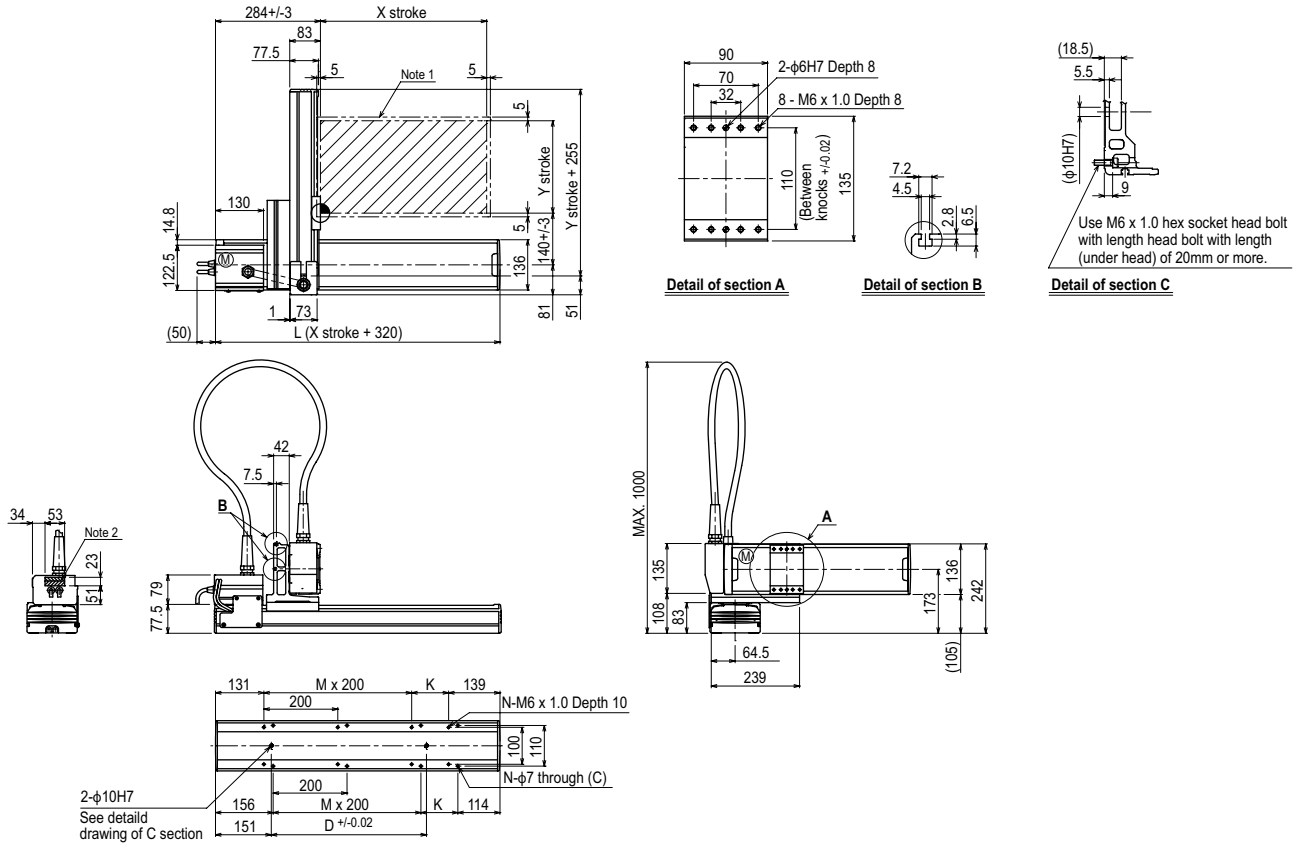

X stroke	150	250	350	450	550	650	750	850
L	470	570	670	770	870	970	1070	1170
K	200	100	200	100	200	100	200	100
D	240	240	420	420	600	600	780	960
M	0	1	1	2	2	3	3	4
N	4	6	6	8	8	10	10	12

Y stroke	150	250	350	450	550	650		
Maximum speed for each stroke (mm/sec) Note 3	X-axis	1200					960	780
	Speed setting	–					80%	65%

Note 1. The moving range when returning to origin and the stop position when stopping by the mechanical stopper.
Note 2. The shaded position indicates an user cable extraction port.

Note 3. When the X-axis stroke is longer than 750mm, resonance of the ball screw may occur depending on the operation conditions (critical speed). In this case, reduce the speed setting on the program by referring to the maximum speeds shown in the table at the left.

SXYx 2 axes A2

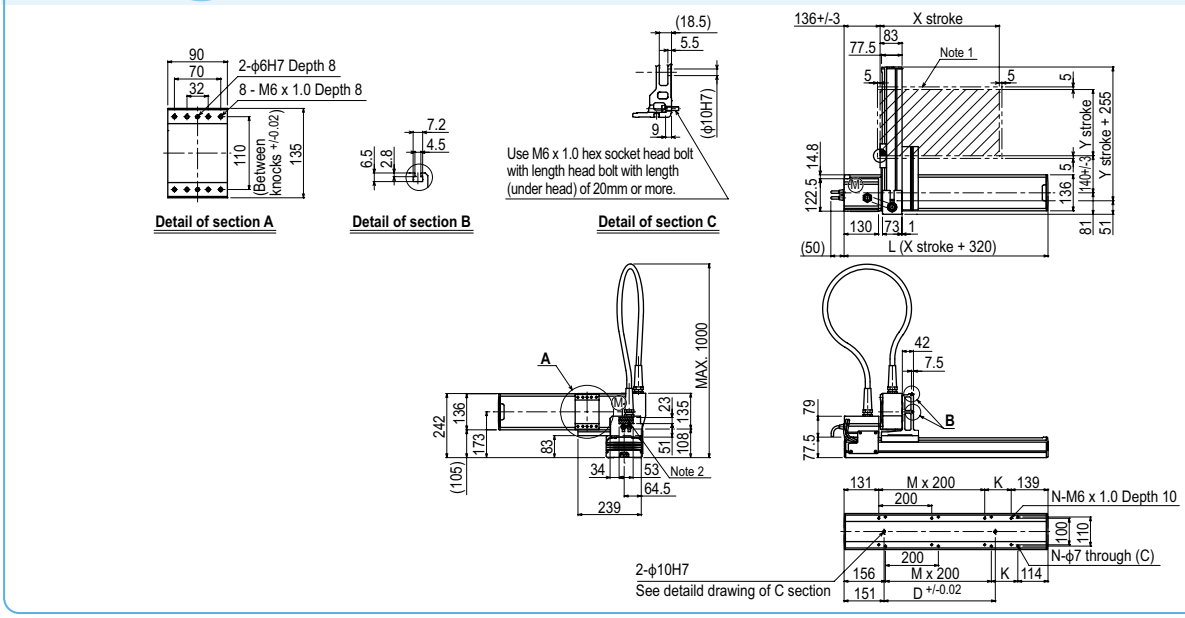

SXYx 2 axes A3

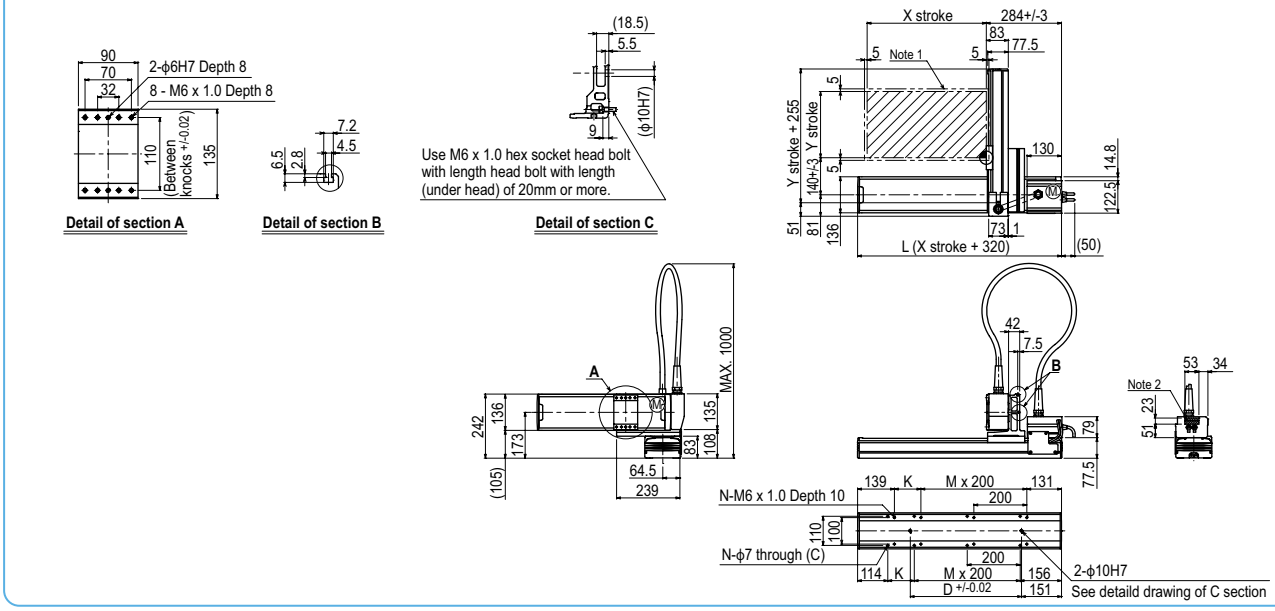

SXYx 2 axes A4

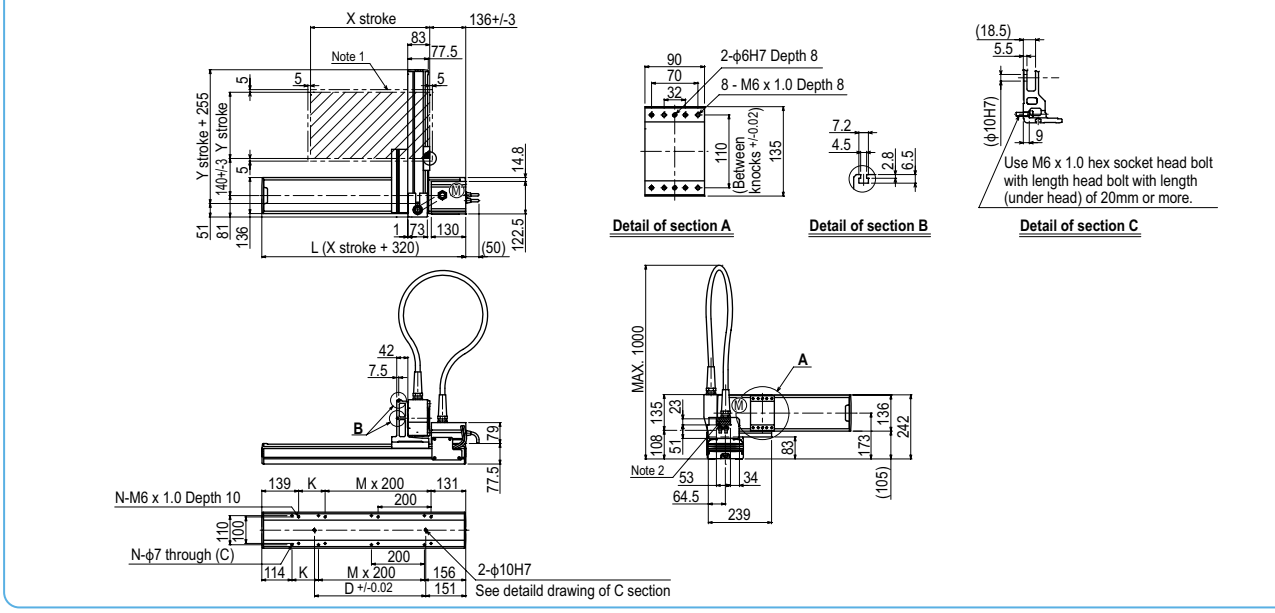

SXYx 2 axes / IO

Arm type Cable carrier

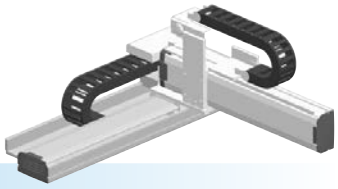

Ordering method

SXYx -	C	-		-		-	IO	-		-	RCX320-2	-		-		-		-	
Model	Cable	Combination	X-axis stroke	Y-axis stroke	ZR-axis	Cable	Controller / Number of controllable axes	Safety standard	Option A (OP.A)	Option B (OP.B)	Vision System	Absolute battery
		A1 A2 A3 A4	15 to 105cm	15 to 65cm		3L: 3.5m 5L: 5m 10L: 10m						

Specify various controller setting items. RCX320 ▶ P.626

Specification

	X-axis	Y-axis
Axis construction Note 1	F14H	F14
AC servo motor output (W)	200	100
Repeatability Note 2 (mm)	+/-0.01	+/-0.01
Drive system	Ball screw ϕ15	Ball screw ϕ15
Ball screw lead Note 3 (Deceleration ratio) (mm)	20	20
Maximum speed Note 4 (mm/sec)	1200	1200
Moving range (mm)	150 to 1050	150 to 650
Robot cable length (m)	Standard: 3.5 Option: 5,10	

Note 1. Use caution that the flame machining (installation holes, tap holes) differs from single-axis robots'.
Note 2. Positioning repeatability in one direction.
Note 3. Leads not listed in the catalog are also available. Contact us for details.
Note 4. When the X-axis stroke is longer than 750mm, resonance of the ball screw may occur depending on the operation conditions (critical speed). In this case, reduce the speed setting on the program by referring to the maximum speeds shown in the table below.

Maximum payload (kg)

Y stroke (mm)	XY 2 axes
150	19
250	16
350	14
450	12
550	10
650	8

Controller

Controller	Operation method
RCX320	Programming / I/O point trace / Remote command / Operation using RS-232C communication

SXYx 2 axes / IO A1

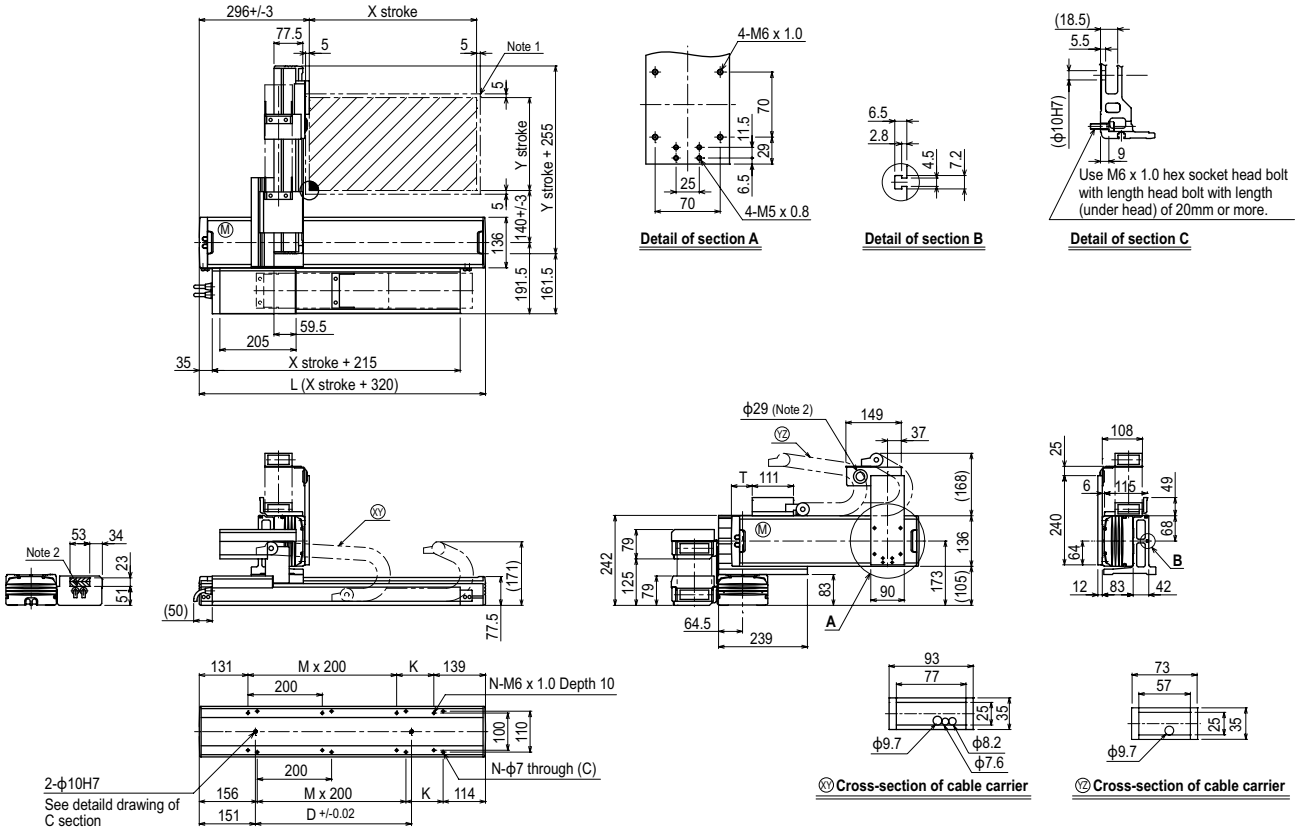

X stroke	150	250	350	450	550	650	750	850	950	1050
L	470	570	670	770	870	970	1070	1170	1270	1370
K	200	100	200	100	200	100	200	100	200	100
D	240	240	420	420	600	600	780	960	960	1140
M	0	1	1	2	2	3	3	4	4	5
N	4	6	6	8	8	10	10	12	12	14

Y stroke	150	250	350	450	550	650
T	55	110	165	220	275	330

Maximum speed for each stroke (mm/sec) Note 3						
X-axis	1200	960	780	600	540
Speed setting	–	80%	65%	50%	45%

Note 1. The moving range when returning to origin and the stop position when stopping by the mechanical stopper.
Note 2. The shaded position indicates an user cable extraction port.

Note 3. When the X-axis stroke is longer than 750mm, resonance of the ball screw may occur depending on the operation conditions (critical speed). In this case, reduce the speed setting on the program by referring to the maximum speeds shown in the table at the left.

MEMO

SXYx 3 axes / ZF

Arm type | Cable carrier | Z-axis: clamped base / moving table type (100W)

Ordering method

SXYx - C - [ ] - [ ] - [ ] - ZF - [ ] - [ ] - RCX340-3 - [ ] - [ ] - [ ] - [ ] - [ ] - [ ] - [ ]

Model	Cable	Combination	X-axis stroke	Y-axis stroke	ZR-axis	Z-axis stroke	Cable	Controller / Number of controllable axes	Safety standard	Option A (OP.A)	Option B (OP.B)	Option C (OP.C)	Option D (OP.D)	Option E (OP.E)	Absolute battery
		A1 A2 A3 A4	15 to 105cm	15 to 65cm		15 to 35cm	3L: 3.5m 5L: 5m 10L: 10m								

Specify various controller setting items. RCX340 ▶ P.636

Specification

	X-axis	Y-axis	Z-axis
Axis construction Note 1	F14H	F14	F10-BK
AC servo motor output (W)	200	100	100
Repeatability Note 2 (mm)	+/-0.01	+/-0.01	+/-0.01
Drive system	Ball screw ϕ15	Ball screw ϕ15	Ball screw ϕ15
Ball screw lead Note 3 (Deceleration ratio) (mm)	20	20	10
Maximum speed Note 4 (mm/sec)	1200	1200	600
Moving range (mm)	150 to 1050	150 to 650	150 to 350
Robot cable length (m)	Standard: 3.5 Option: 5,10		

Note 1. Use caution that the flame machining (installation holes, tap holes) differs from single-axis robots'.
Note 2. Positioning repeatability in one direction.
Note 3. Leads not listed in the catalog are also available. Contact us for details.
Note 4. When the X-axis stroke is longer than 750mm, resonance of the ball screw may occur depending on the operation conditions (critical speed). In this case, reduce the speed setting on the program by referring to the maximum speeds shown in the table below.

Maximum payload (kg)

	Z stroke (mm)		
Y stroke (mm)	150	250	350
150	10	10	10
250	10	10	9
350	9	8	7
450	7	6	5
550	5	4	3
650	3	2	1

Controller

Controller	Operation method
RCX340	Programming / I/O point trace / Remote command / Operation using RS-232C communication

SXYx 3 axes / ZF A1

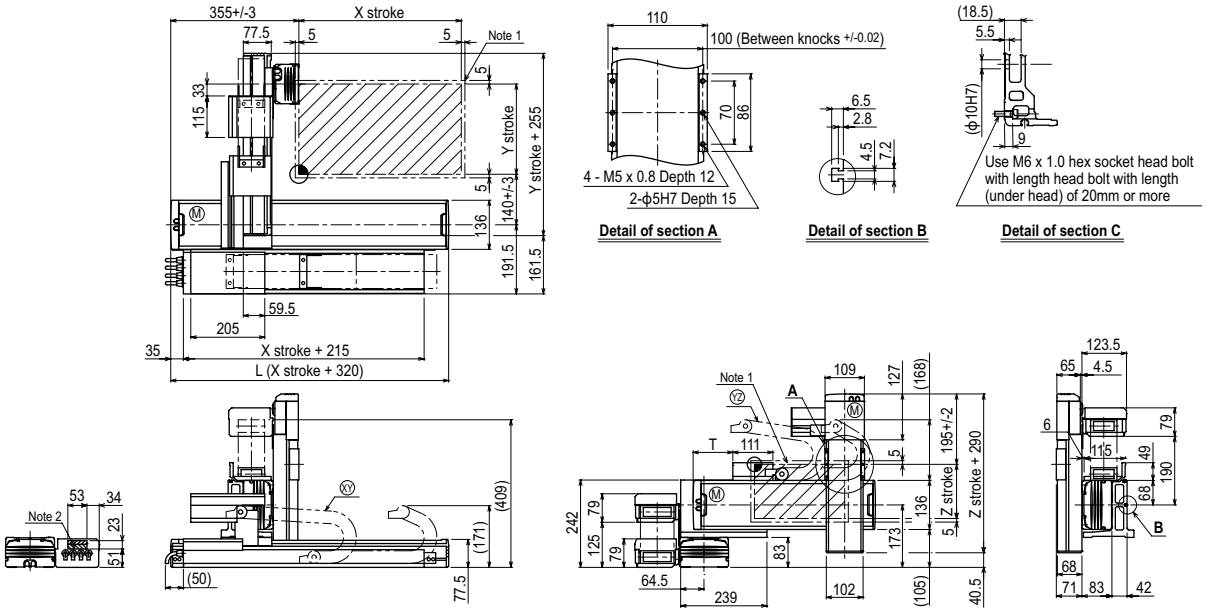

X stroke	150	250	350	450	550	650	750	850	950	1050
L	470	570	670	770	870	970	1070	1170	1270	1370
K	200	100	200	100	200	100	200	100	200	100
D	240	240	420	420	600	600	780	960	960	1140
M	0	1	1	2	2	3	3	4	4	5
N	4	6	6	8	8	10	10	12	12	14

Y stroke	150	250	350	450	550	650
T	55	110	165	220	275	330

Z stroke	150	250	350

Maximum speed for each stroke (mm/sec) Note 3						
X-axis	1200	960	780	600	540
Speed setting	–	80%	65%	50%	45%

Note 1. The moving range when returning to origin and the stop position when stopping by the mechanical stopper.
Note 2. The shaded position indicates an user cable extraction port.

Note 3. When the X-axis stroke is longer than 750mm, resonance of the ball screw may occur depending on the operation conditions (critical speed). In this case, reduce the speed setting on the program by referring to the maximum speeds shown in the table at the left.

Controller RCX340 ▶ 636

SXYx 3 axes / ZF

Arm type | Whipover | Z-axis: clamped base / moving table type (100W)

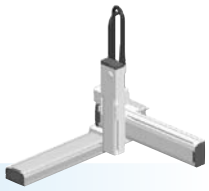

Ordering method

SXYx - S	-		-		-	ZF	-		-	RCX340-3	-		-		-		-		-		-	
Model	Cable	Combination	X-axis stroke	Y-axis stroke	ZR-axis	Z-axis stroke	Cable	Controller / Number of controllable axes	Safety standard	Option A (OP.A)	Option B (OP.B)	Option C (OP.C)	Option D (OP.D)	Option E (OP.E)	Absolute battery
		A1 A2 A3 A4	15 to 85cm	15 to 65cm		15 to 35cm	3L: 3.5m 5L: 5m 10L: 10m								

Specify various controller setting items. RCX340 ▶ P.636

Specification

	X-axis	Y-axis	Z-axis
Axis construction Note 1	F14H	F14	F10-BK
AC servo motor output (W)	200	100	100
Repeatability Note 2 (mm)	+/-0.01	+/-0.01	+/-0.01
Drive system	Ball screw ϕ15	Ball screw ϕ15	Ball screw ϕ15
Ball screw lead Note 3 (Deceleration ratio) (mm)	20	20	10
Maximum speed Note 4 (mm/sec)	1200	1200	600
Moving range (mm)	150 to 850	150 to 650	150 to 350
Robot cable length (m)	Standard: 3.5 Option: 5,10		

Note 1. Use caution that the flame machining (installation holes, tap holes) differs from single-axis robots'.
Note 2. Positioning repeatability in one direction.
Note 3. Leads not listed in the catalog are also available. Contact us for details.
Note 4. When the X-axis stroke is longer than 750mm, resonance of the ball screw may occur depending on the operation conditions (critical speed). In this case, reduce the speed setting on the program by referring to the maximum speeds shown in the table below.

Maximum payload (kg)

	Z stroke (mm)		
Y stroke (mm)	150	250	350
150	10	10	10
250	10	10	9
350	9	8	7
450	7	6	5
550	5	4	3
650	3	2	1

Controller

Controller	Operation method
RCX340	Programming / I/O point trace / Remote command / Operation using RS-232C communication

SXYx 3 axes / ZF A1

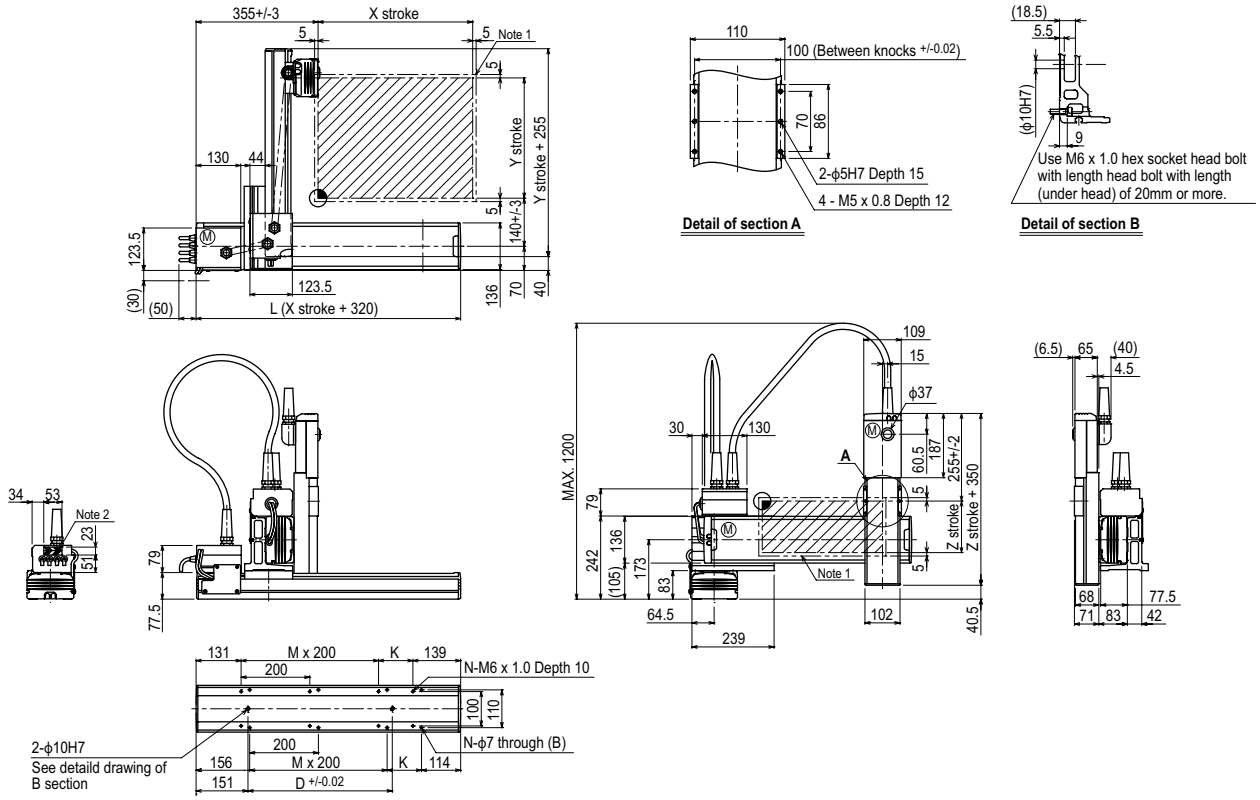

X stroke	150	250	350	450	550	650	750	850
L	470	570	670	770	870	970	1070	1170
K	200	100	200	100	200	100	200	100
D	240	240	420	420	600	600	780	960
M	0	1	1	2	2	3	3	4
N	4	6	6	8	8	10	10	12

Y stroke	150	250	350	450	550	650

Z stroke	150	250	350

Maximum speed for each stroke (mm/sec) Note 3				
	X-axis	1200	960	780
	Speed setting	–	80%	65%

Note 1. The moving range when returning to origin and the stop position when stopping by the mechanical stopper.
Note 2. The shaded position indicates an user cable extraction port.

Note 3. When the X-axis stroke is longer than 750mm, resonance of the ball screw may occur depending on the operation conditions (critical speed). In this case, reduce the speed setting on the program by referring to the maximum speeds shown in the table at the left.

Controller RCX340 ▶ 636

SXYx 3 axes / ZFL20

Arm type | Cable carrier | Z-axis: clamped base / moving table type (200W)

Ordering method

SXYx - C - [ ] - [ ] - [ ] - ZFL20 - [ ] - [ ] - RCX340-3 - [ ] - [ ] - [ ] - [ ] - [ ] - [ ] - [ ]

Model	Cable	Combination	X-axis stroke	Y-axis stroke	ZR-axis	Z-axis stroke	Cable	Controller / Number of controllable axes	Safety standard	Option A (OP.A)	Option B (OP.B)	Option C (OP.C)	Option D (OP.D)	Option E (OP.E)	Absolute battery
		A1 A2 A3 A4	15 to 105cm	15 to 65cm		15 to 35cm	3L: 3.5m 5L: 5m 10L: 10m								

Specify various controller setting items. RCX340 ▶ P.636

Specification

	X-axis	Y-axis	Z-axis
Axis construction Note 1	F14H	F14	F10H-BK
AC servo motor output (W)	200	100	200
Repeatability Note 2 (mm)	+/-0.01	+/-0.01	+/-0.01
Drive system	Ball screw ϕ15	Ball screw ϕ15	Ball screw ϕ15
Ball screw lead Note 3 (Deceleration ratio) (mm)	20	20	20
Maximum speed Note 4 (mm/sec)	1200	1200	1200
Moving range (mm)	150 to 1050	150 to 650	150 to 350
Robot cable length (m)	Standard: 3.5 Option: 5,10		

Note 1. Use caution that the flame machining (installation holes, tap holes) differs from single-axis robots'.
Note 2. Positioning repeatability in one direction.
Note 3. Leads not listed in the catalog are also available. Contact us for details.
Note 4. When the X-axis stroke is longer than 750mm, resonance of the ball screw may occur depending on the operation conditions (critical speed). In this case, reduce the speed setting on the program by referring to the maximum speeds shown in the table below.

Maximum payload (kg)

	Z stroke (mm)		
Y stroke (mm)	150	250	350
150	8	8	8
250	8	8	8
350	8	7	6
450	6	5	4
550	4	3	2
650	2	1	1

Controller

Controller	Operation method
RCX340	Programming / I/O point trace / Remote command / Operation using RS-232C communication

SXYx 3 axes / ZFL20 A1

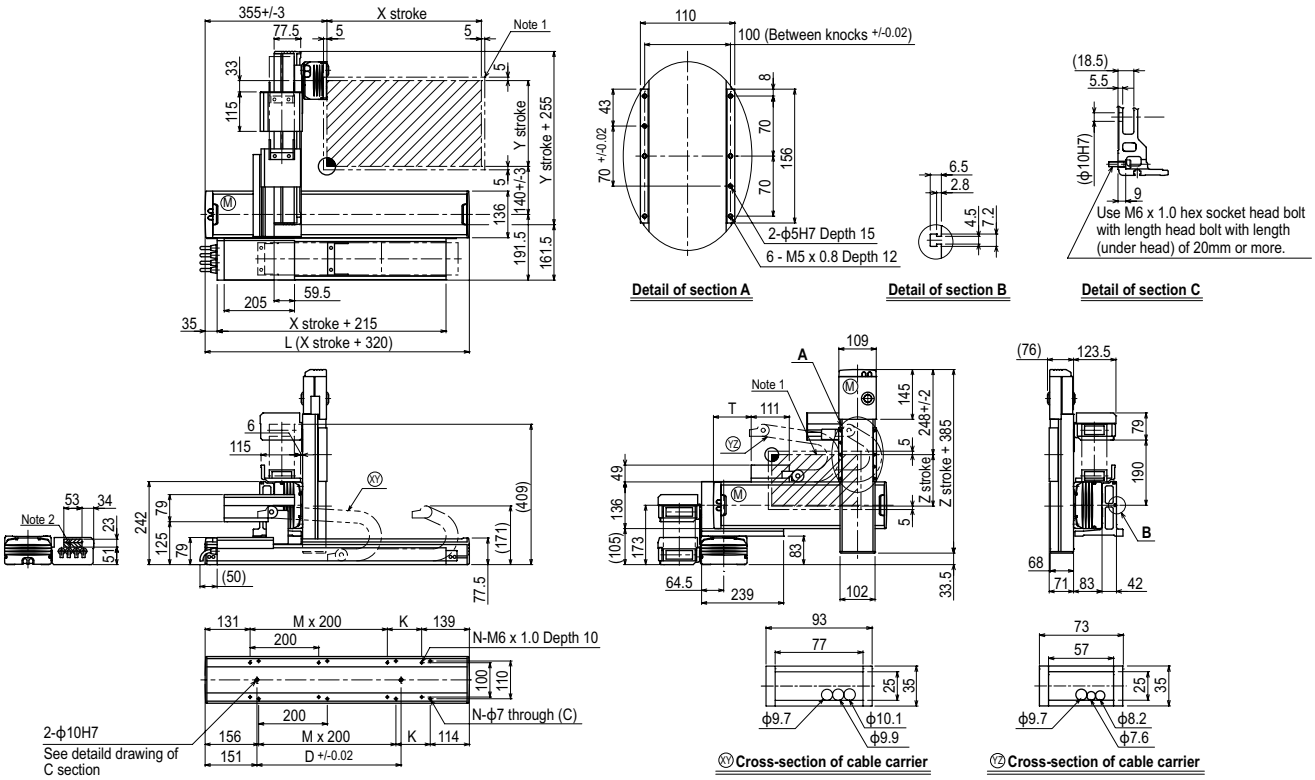

X stroke	150	250	350	450	550	650	750	850	950	1050
L	470	570	670	770	870	970	1070	1170	1270	1370
K	200	100	200	100	200	100	200	100	200	100
D	240	240	420	420	600	600	780	960	960	1140
M	0	1	1	2	2	3	3	4	4	5
N	4	6	6	8	8	10	10	12	12	14

Y stroke	150	250	350	450	550	650
T	55	110	165	220	275	330

Z stroke	150	250	350

Maximum speed for each stroke (mm/sec) Note 3					
X-axis	1200	960	780	600	540
Speed setting	–	80%	65%	50%	45%

Note 1. The moving range when returning to origin and the stop position when stopping by the mechanical stopper.
Note 2. The shaded position indicates an user cable extraction port.

Note 3. When the X-axis stroke is longer than 750mm, resonance of the ball screw may occur depending on the operation conditions (critical speed). In this case, reduce the speed setting on the program by referring to the maximum speeds shown in the table at the left.

Controller RCX340 ▶ 636

SXYx 3 axes / ZFH

Arm type | Cable carrier | Z-axis: clamped table / moving base type (200W)

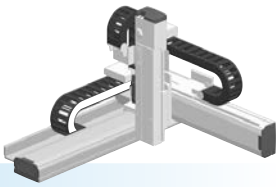

Ordering method

SXYx - C - [ ] - [ ] - [ ] - **ZFH** - [ ] - [ ] - **RCX340-3** - [ ] - [ ] - [ ] - [ ] - [ ] - [ ] - [ ]

Model	Cable	Combination	X-axis stroke	Y-axis stroke	ZR-axis	Z-axis stroke	Cable	Controller / Number of controllable axes	Safety standard	Option A (OP.A)	Option B (OP.B)	Option C (OP.C)	Option D (OP.D)	Option E (OP.E)	Absolute battery
		A1 A2 A3 A4	15 to 105cm	15 to 65cm		15 to 35cm	3L: 3.5m 5L: 5m 10L: 10m								

Specify various controller setting items. RCX340 ▶ P.636

Specification

	X-axis	Y-axis	Z-axis
Axis construction Note 1	F14H	F14	F10H-BK
AC servo motor output (W)	200	100	200
Repeatability Note 2 (mm)	+/-0.01	+/-0.01	+/-0.01
Drive system	Ball screw ϕ15	Ball screw ϕ15	Ball screw ϕ15
Ball screw lead Note 3 (Deceleration ratio) (mm)	20	20	10
Maximum speed Note 4 (mm/sec)	1200	1200	600
Moving range (mm)	150 to 1050	150 to 650	150 to 350
Robot cable length (m)	Standard: 3.5 Option: 5,10		

Note 1. Use caution that the flame machining (installation holes, tap holes) differs from single-axis robots'.
Note 2. Positioning repeatability in one direction.
Note 3. Leads not listed in the catalog are also available. Contact us for details.
Note 4. When the X-axis stroke is longer than 750mm, resonance of the ball screw may occur depending on the operation conditions (critical speed). In this case, reduce the speed setting on the program by referring to the maximum speeds shown in the table below.

Maximum payload (kg)

	Z stroke (mm)		
Y stroke (mm)	150	250	350
150	13	12	11
250	10	9	8
350	8	7	6
450	6	5	4
550	4	3	2
650	2	1	1

Controller

Controller	Operation method
RCX340	Programming / I/O point trace / Remote command / Operation using RS-232C communication

SXYx 3 axes / ZFH A1

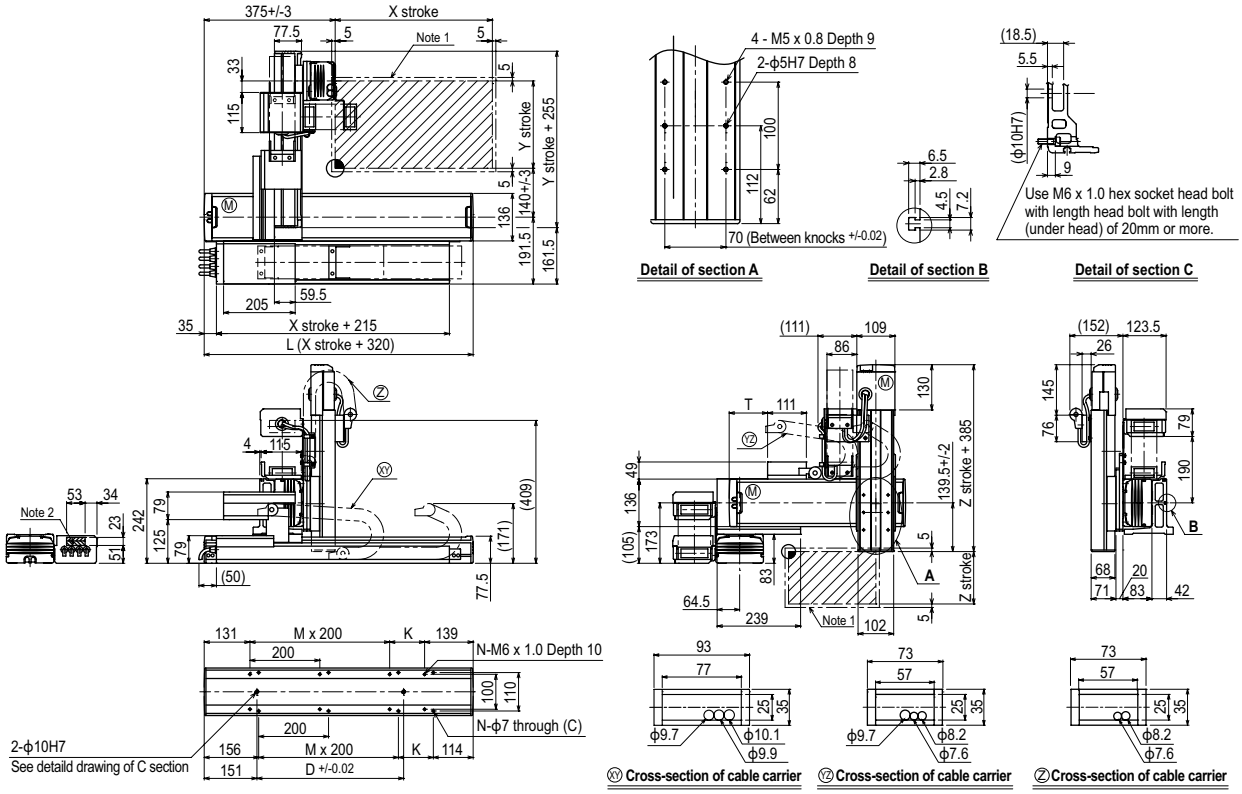

X stroke	150	250	350	450	550	650	750	850	950	1050
L	470	570	670	770	870	970	1070	1170	1270	1370
K	200	100	200	100	200	100	200	100	200	100
D	240	240	420	420	600	600	780	960	960	1140
M	0	1	1	2	2	3	3	4	4	5
N	4	6	6	8	8	10	10	12	12	14

Y stroke	150	250	350	450	550	650
T	55	110	165	220	275	330

Z stroke	150	250	350

Maximum speed for each stroke (mm/sec) Note 3						
X-axis	1200	960	780	600	540
Speed setting	–	80%	65%	50%	45%

Note 1. The moving range when returning to origin and the stop position when stopping by the mechanical stopper.
Note 2. The shaded position indicates an user cable extraction port.

Note 3. When the X-axis stroke is longer than 750mm, resonance of the ball screw may occur depending on the operation conditions (critical speed). In this case, reduce the speed setting on the program by referring to the maximum speeds shown in the table at the left.

Controller RCX340 ▶ 636

SXYx 3 axes / ZS

Arm type | Cable carrier | Z-axis shaft vertical type

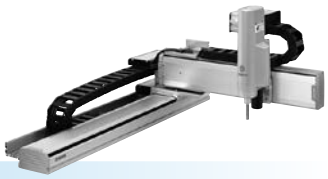

Ordering method

SXYx - C	-	[ ]	-	[ ]	-	[ ]	-	[ ]	-	15	-	[ ]	-	RCX340-3	-	[ ]	-	[ ]	-	[ ]	-	[ ]	-	[ ]	-	[ ]
Model	Cable	Combi-nation		X-axis stroke		Y-axis stroke		ZR-axis		Z-axis stroke		Cable		Controller / Number of controllable axes		Safety standard		Option A (OP.A)		Option B (OP.B)		Option C (OP.C)		Option D (OP.D)		Option E (OP.E)		Absolute battery
		A1 A2 A3 A4		15 to 105cm		15 to 65cm		ZS12 ZS6				3L: 3.5m 5L: 5m 10L: 10m																

Specify various controller setting items. RCX340 ▶ P.636

Specification

	X-axis	Y-axis	Z-axis ZS12	Z-axis ZS6
Axis construction Note 1	F14H	F14	–	
AC servo motor output (W)	200	100	60	
Repeatability Note 2 (mm)	+/-0.01	+/-0.01	+/-0.02	
Drive system	Ball screw ϕ15	Ball screw ϕ15	Ball screw ϕ12	
Ball screw lead Note 3 (Deceleration ratio) (mm)	20	20	12	6
Maximum speed Note 4 (mm/sec)	1200	1200	1000	500
Moving range (mm)	150 to 1050	150 to 650	150	
Robot cable length (m)	Standard: 3.5 Option: 5,10			

Note 1. Use caution that the flame machining (installation holes, tap holes) differs from single-axis robots'.
Note 2. Positioning repeatability in one direction.
Note 3. Leads not listed in the catalog are also available. Contact us for details.
Note 4. When the X-axis stroke is longer than 750mm, resonance of the ball screw may occur depending on the operation conditions (critical speed). In this case, reduce the speed setting on the program by referring to the maximum speeds shown in the table below.

Maximum payload (kg)

Y stroke (mm)	ZS12	ZS6
150 to 650	3	5

Controller

Controller	Operation method
RCX340	Programming / I/O point trace / Remote command / Operation using RS-232C communication

SXYx 3 axes / ZS A1

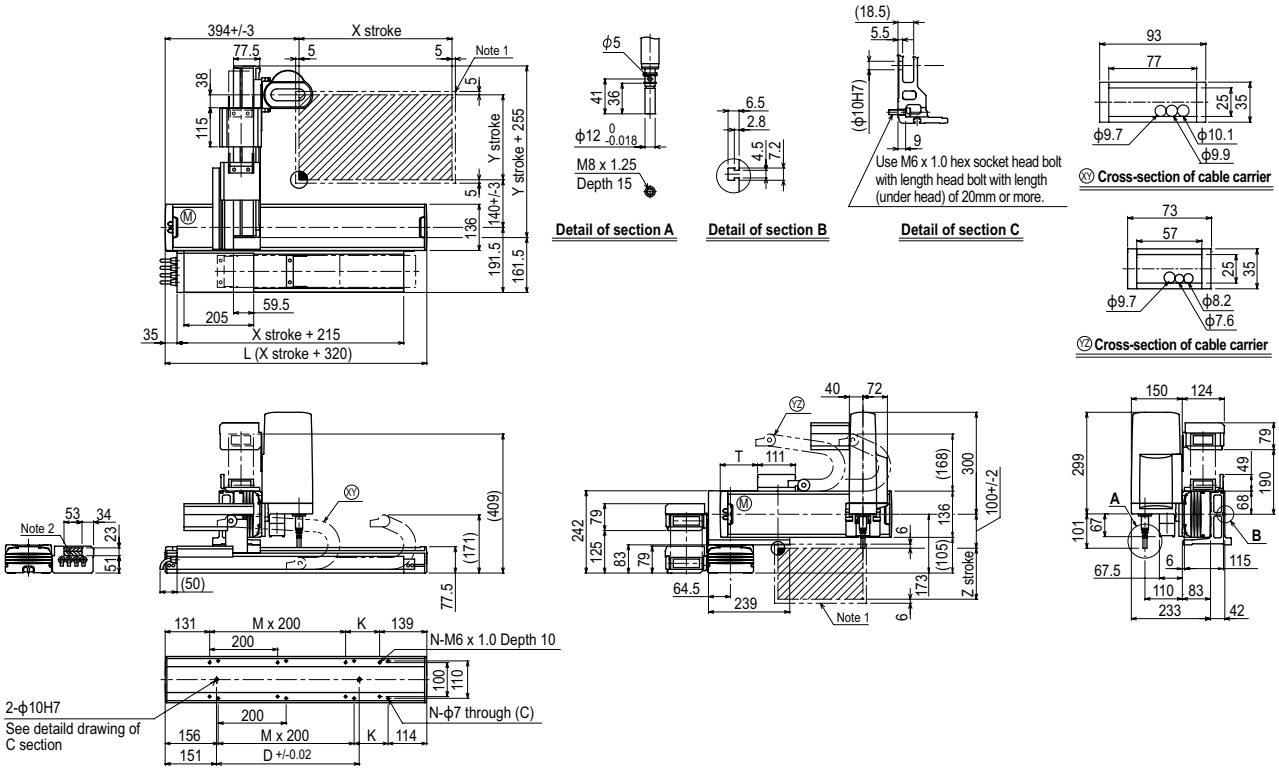

X stroke	150	250	350	450	550	650	750	850	950	1050
L	470	570	670	770	870	970	1070	1170	1270	1370
K	200	100	200	100	200	100	200	100	200	100
D	240	240	420	420	600	600	780	960	960	1140
M	0	1	1	2	2	3	3	4	4	5
N	4	6	6	8	8	10	10	12	12	14

Y stroke	150	250	350	450	550	650
T	55	110	165	215	270	325

Z stroke	150

Maximum speed for each stroke (mm/sec) Note 3						
X-axis	1200	960	780	600	540
Speed setting	–	80%	65%	50%	45%

Note 1. The moving range when returning to origin and the stop position when stopping by the mechanical stopper.
Note 2. The shaded position indicates an user cable extraction port.
Note 3. When the X-axis stroke is longer than 750mm, resonance of the ball screw may occur depending on the operation conditions (critical speed). In this case, reduce the speed setting on the program by referring to the maximum speeds shown in the table at the left.

SXYx 3 axes / ZS

Arm type | Whipover | Z-axis shaft vertical type

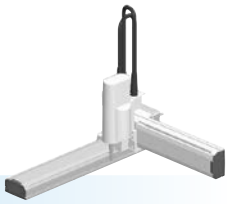

Ordering method

SXYx - S - [ ] - [ ] - [ ] - [ ] - 15 - [ ] - RCX340-3 - [ ] - [ ] - [ ] - [ ] - [ ] - [ ] - [ ]

Model	Cable	Combination	X-axis stroke	Y-axis stroke	ZR-axis	Z-axis stroke	Cable	Controller / Number of controllable axes	Safety standard	Option A (OP.A)	Option B (OP.B)	Option C (OP.C)	Option D (OP.D)	Option E (OP.E)	Absolute battery
		A1 A2 A3 A4	15 to 85cm	15 to 65cm	ZS12 ZS6		3L: 3.5m 5L: 5m 10L: 10m								

Specify various controller setting items. RCX340 ▶ P.636

Specification

	X-axis	Y-axis	Z-axis: ZS12	Z-axis: ZS6
Axis construction Note 1	F14H	F14	–	
AC servo motor output (W)	200	100	60	
Repeatability Note 2 (mm)	+/-0.01	+/-0.01	+/-0.02	
Drive system	Ball screw ϕ15	Ball screw ϕ15	Ball screw ϕ12	
Ball screw lead Note 3 (Deceleration ratio) (mm)	20	20	12	6
Maximum speed Note 4 (mm/sec)	1200	1200	1000	500
Moving range (mm)	150 to 850	150 to 650	150	
Robot cable length (m)	Standard: 3.5 Option: 5,10			

Note 1. Use caution that the flame machining (installation holes, tap holes) differs from single-axis robots'.
Note 2. Positioning repeatability in one direction.
Note 3. Leads not listed in the catalog are also available. Contact us for details.
Note 4. When the X-axis stroke is longer than 750mm, resonance of the ball screw may occur depending on the operation conditions (critical speed). In this case, reduce the speed setting on the program by referring to the maximum speeds shown in the table below.

Maximum payload (kg)

Y stroke (mm)	ZS12	ZS6
150 to 650	3	5

Controller

Controller	Operation method
RCX340	Programming / I/O point trace / Remote command / Operation using RS-232C communication

SXYx 3 axes / ZS A1

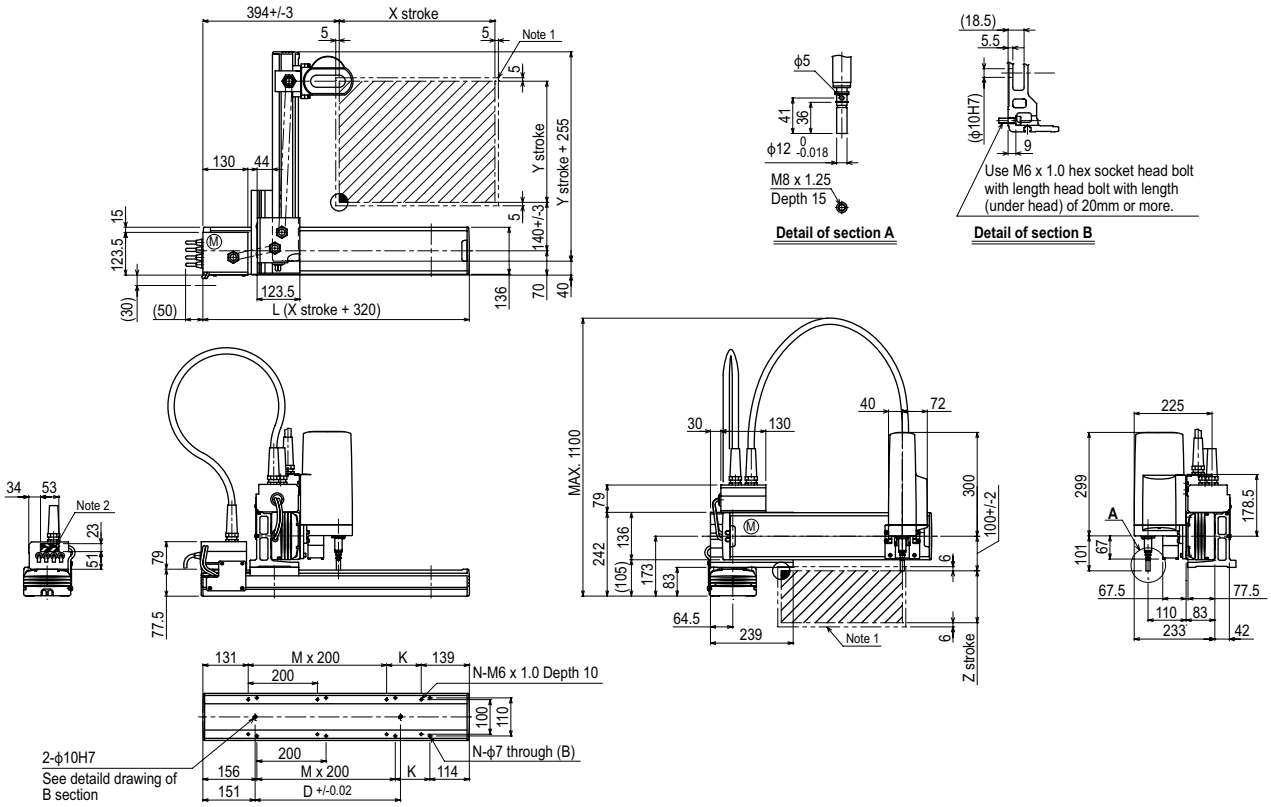

X stroke	150	250	350	450	550	650	750	850
L	470	570	670	770	870	970	1070	1170
K	200	100	200	100	200	100	200	100
D	240	240	420	420	600	600	780	960
M	0	1	1	2	2	3	3	4
N	4	6	6	8	8	10	10	12

Y stroke	150	250	350	450	550	650

Z stroke	150

Maximum speed for each stroke (mm/sec) Note 3				
	X-axis	1200	960	780
	Speed setting	–	80%	65%

Note 1. The moving range when returning to origin and the stop position when stopping by the mechanical stopper.
Note 2. The shaded position indicates an user cable extraction port.
Note 3. When the X-axis stroke is longer than 750mm, resonance of the ball screw may occur depending on the operation conditions (critical speed). In this case, reduce the speed setting on the program by referring to the maximum speeds shown in the table at the left.

Controller RCX340 ▶ 636

SXYx 4 axes / ZRF

Arm type | Cable carrier | Z-axis: clamped base / moving table type (100W)+R-axis

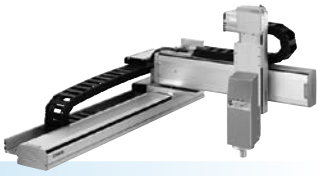

Ordering method

SXYx - C - [ ] - [ ] - [ ] - ZRF - [ ] - [ ] - RCX340-4 - [ ] - [ ] - [ ] - [ ] - [ ] - [ ] - [ ]

Model	Cable	Combination	X-axis stroke	Y-axis stroke	ZR-axis	Z-axis stroke	Cable	Controller / Number of controllable axes	Safety standard	Option A (OP.A)	Option B (OP.B)	Option C (OP.C)	Option D (OP.D)	Option E (OP.E)	Absolute battery
		A1 A2 A3 A4	15 to 105cm	15 to 65cm		15 to 35cm	3L: 3.5m 5L: 5m 10L: 10m								

Specify various controller setting items. RCX340 ▶ P.636

Specification

	X-axis	Y-axis	Z-axis	R-axis
Axis construction Note 1	F14H	F14	F10-BK	R5
AC servo motor output (W)	200	100	100	50
Repeatability Note 2 (XYZ: mm) (R: °)	+/-0.01	+/-0.01	+/-0.01	+/-0.0083
Drive system	Ball screw ϕ15	Ball screw ϕ15	Ball screw ϕ15	Harmonic gear
Ball screw lead Note 3 (Deceleration ratio) (mm)	20	20	10	(1/50)
Maximum speed Note 4 (XYZ: mm/sec) (R: °/sec)	1200	1200	600	360
Moving range (XYZ: mm) (R: °)	150 to 1050	150 to 650	150 to 350	360
Robot cable length (m)	Standard: 3.5 Option: 5,10			

Note 1.Use caution that the flame machining (installation holes, tap holes) differs from single-axis robots'.
Note 2. Positioning repeatability in one direction.
Note 3. Leads not listed in the catalog are also available. Contact us for details.
Note 4. When the X-axis stroke is longer than 750mm, resonance of the ball screw may occur depending on the operation conditions (critical speed). In this case, reduce the speed setting on the program by referring to the maximum speeds shown in the table below.

Maximum payload (kg)

	Z stroke (mm)		
Y stroke (mm)	150	250	350
150	6	6	6
250	6	5	4
350	4	3	2
450	3	2	1
550	2	1	–
650	1	–	–

Controller

Controller	Operation method
RCX340	Programming / I/O point trace / Remote command / Operation using RS-232C communication

SXYx 4 axes / ZRF A1

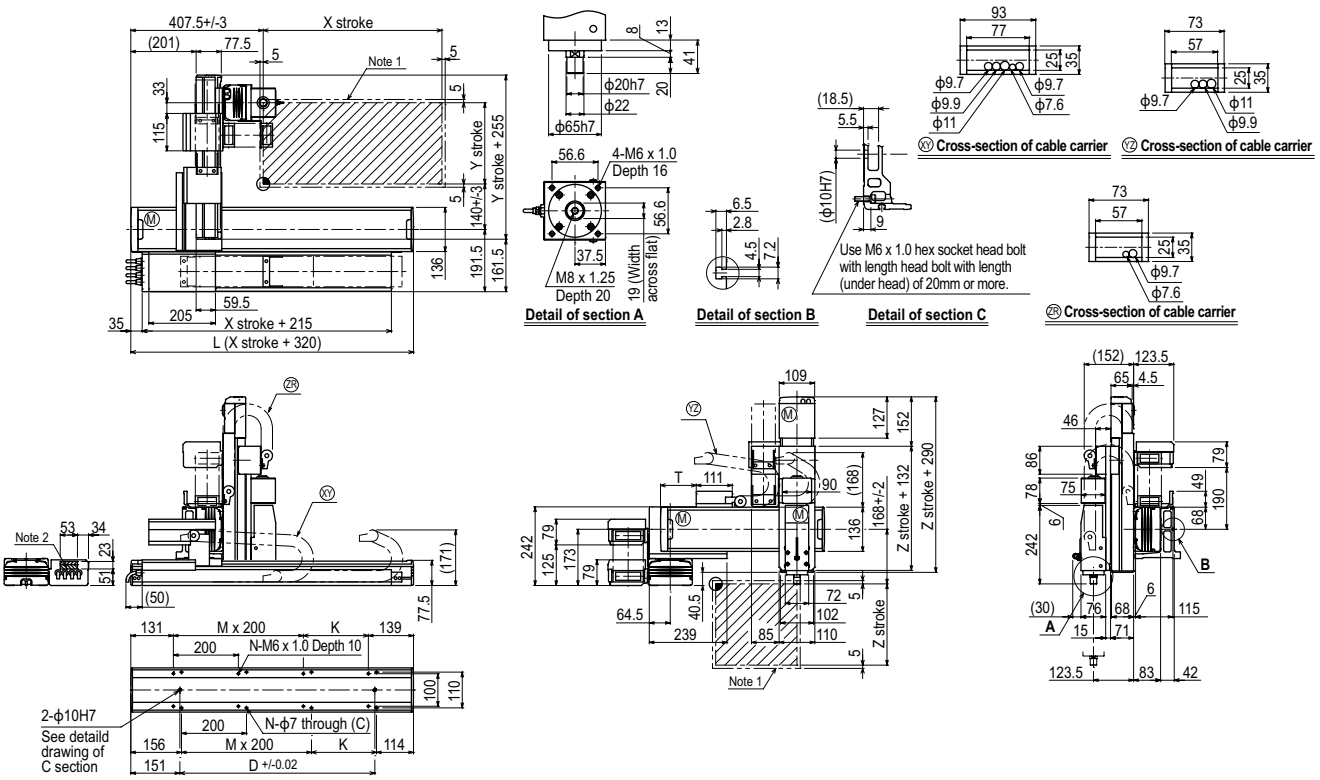

X stroke	150	250	350	450	550	650	750	850	950	1050
L	470	570	670	770	870	970	1070	1170	1270	1370
K	200	100	200	100	200	100	200	100	200	100
D	240	240	420	420	600	600	780	960	960	1140
M	0	1	1	2	2	3	3	4	4	5
N	4	6	6	8	8	10	10	12	12	14

Y stroke	150	250	350	450	550	650
T	55	110	165	220	275	330

Z stroke	150	250	350

Maximum speed for each stroke (mm/sec) Note 3						
X-axis	1200	960	780	600	540
Speed setting	–	80%	65%	50%	45%

Note 1. The moving range when returning to origin and the stop position when stopping by the mechanical stopper.
Note 2. The shaded position indicates an user cable extraction port.

Note 3. When the X-axis stroke is longer than 750mm, resonance of the ball screw may occur depending on the operation conditions (critical speed). In this case, reduce the speed setting on the program by referring to the maximum speeds shown in the table at the left.

SXYx 4 axes / ZRF

Arm type | Whipover | Z-axis: clamped base / moving table type (100W)+R-axis

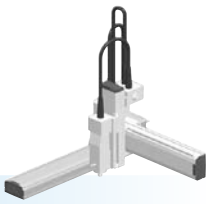

Ordering method

SXYx - S - □ - □ - □ - ZRF - □ - □ - RCX340-4 - □ - □ - □ - □ - □ - □ - □

Model	Cable	Combination	X-axis stroke	Y-axis stroke	ZR-axis	Z-axis stroke	Cable	Controller / Number of controllable axes	Safety standard	Option A (OP.A)	Option B (OP.B)	Option C (OP.C)	Option D (OP.D)	Option E (OP.E)	Absolute battery
		A1 A2 A3 A4	15 to 85cm	15 to 65cm		15 to 35cm	3L: 3.5m 5L: 5m 10L: 10m								

Specify various controller setting items. RCX340 ▶ P.636

Specification

	X-axis	Y-axis	Z-axis	R-axis
Axis construction Note 1	F14H	F14	F10-BK	R5
AC servo motor output (W)	200	100	100	50
Repeatability Note 2 (XYZ: mm) (R: °)	+/-0.01	+/-0.01	+/-0.01	+/-0.0083
Drive system	Ball screw ϕ15	Ball screw ϕ15	Ball screw ϕ15	Harmonic gear
Ball screw lead Note 3 (Deceleration ratio) (mm)	20	20	10	(1/50)
Maximum speed Note 4 (XYZ: mm/sec) (R: °/sec)	1200	1200	600	360
Moving range (XYZ: mm) (R: °)	150 to 850	150 to 650	150 to 350	360
Robot cable length (m)	Standard: 3.5 Option: 5,10			

Note 1. Use caution that the flame machining (installation holes, tap holes) differs from single-axis robots'.
Note 2. Positioning repeatability in one direction.
Note 3. Leads not listed in the catalog are also available. Contact us for details.
Note 4. When the X-axis stroke is longer than 750mm, resonance of the ball screw may occur depending on the operation conditions (critical speed). In this case, reduce the speed setting on the program by referring to the maximum speeds shown in the table below.

Maximum payload (kg)

	Z stroke (mm)		
Y stroke (mm)	150	250	350
150	6	6	6
250	6	5	4
350	4	3	2
450	3	2	1
550	2	1	–
650	1	–	–

Controller

Controller	Operation method
RCX340	Programming / I/O point trace / Remote command / Operation using RS-232C communication

SXYx 4 axes / ZRF A1

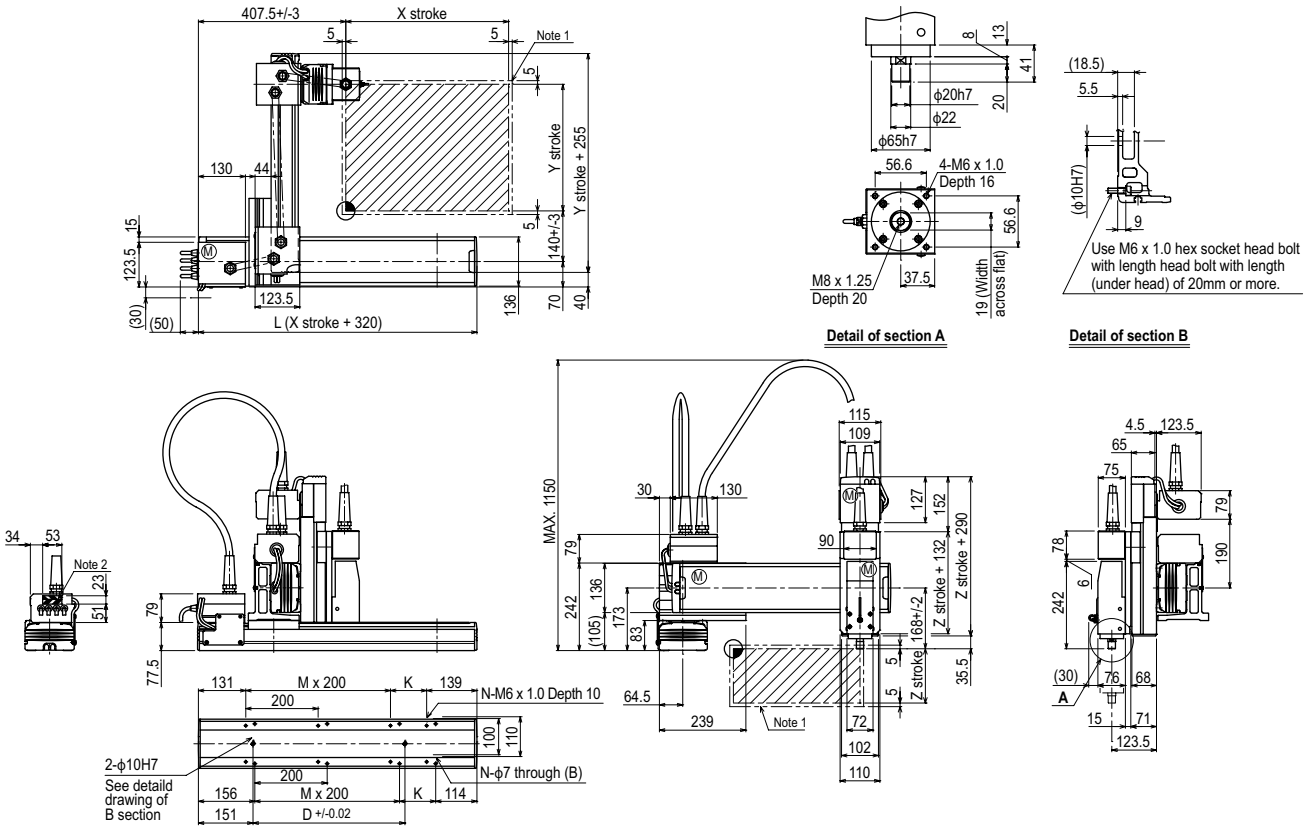

X stroke	150	250	350	450	550	650	750	850
L	470	570	670	770	870	970	1070	1170
K	200	100	200	100	200	100	200	100
D	240	240	420	420	600	600	780	960
M	0	1	1	2	2	3	3	4
N	4	6	6	8	8	10	10	12

Y stroke	150	250	350	450	550	650

Z stroke	150	250	350

Maximum speed for each stroke (mm/sec) Note 3				
	X-axis	1200	960	780
	Speed setting	–	80%	65%

Note 1. The moving range when returning to origin and the stop position when stopping by the mechanical stopper.
Note 2. The shaded position indicates an user cable extraction port.

Note 3. When the X-axis stroke is longer than 750mm, resonance of the ball screw may occur depending on the operation conditions (critical speed). In this case, reduce the speed setting on the program by referring to the maximum speeds shown in the table at the left.

Controller RCX340 ▶ 636

SXYx 4 axes / ZRFL20

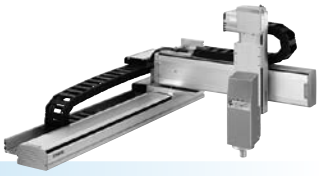

Arm type | Cable carrier | Z-axis: clamped base / moving table type (200W)+R-axis

Ordering method

SXYx - C - [ ] - [ ] - [ ] - ZRFL20 - [ ] - [ ] - RCX340-4 - [ ] - [ ] - [ ] - [ ] - [ ] - [ ] - [ ]

Model	Cable	Combination	X-axis stroke	Y-axis stroke	ZR-axis	Z-axis stroke	Cable	Controller / Number of controllable axes	Safety standard	Option A (OP.A)	Option B (OP.B)	Option C (OP.C)	Option D (OP.D)	Option E (OP.E)	Absolute battery
		A1 A2 A3 A4	15 to 105cm	15 to 55cm		15 to 35cm	3L: 3.5m 5L: 5m 10L: 10m								

Specify various controller setting items. RCX340 ▶ P.636

Specification

	X-axis	Y-axis	Z-axis	R-axis
Axis construction Note 1	F14H	F14	F10H-BK	R5
AC servo motor output (W)	200	100	200	50
Repeatability Note 2 (XYZ: mm) (R: °)	+/-0.01	+/-0.01	+/-0.01	+/-0.0083
Drive system	Ball screw ϕ15	Ball screw ϕ15	Ball screw ϕ15	Harmonic gear
Ball screw lead Note 3 (Deceleration ratio) (mm)	20	20	20	(1/50)
Maximum speed Note 4 (XYZ: mm/sec) (R: °/sec)	1200	1200	1200	360
Moving range (XYZ: mm) (R: °)	150 to 1050	150 to 550	150 to 350	360
Robot cable length (m)	Standard: 3.5 Option: 5,10			

Note 1. Use caution that the flame machining (installation holes, tap holes) differs from single-axis robots'.
Note 2. Positioning repeatability in one direction.
Note 3. Leads not listed in the catalog are also available. Contact us for details.
Note 4. When the X-axis stroke is longer than 750mm, resonance of the ball screw may occur depending on the operation conditions (critical speed). In this case, reduce the speed setting on the program by referring to the maximum speeds shown in the table below.

Maximum payload (kg)

	Z stroke (mm)		
Y stroke (mm)	150	250	350
150	4	4	4
250	4	4	3
350	4	3	1
450	2	1	–
550	1	–	–

Controller

Controller	Operation method
RCX340	Programming / I/O point trace / Remote command / Operation using RS-232C communication

SXYx 4 axes / ZRFL20 A1

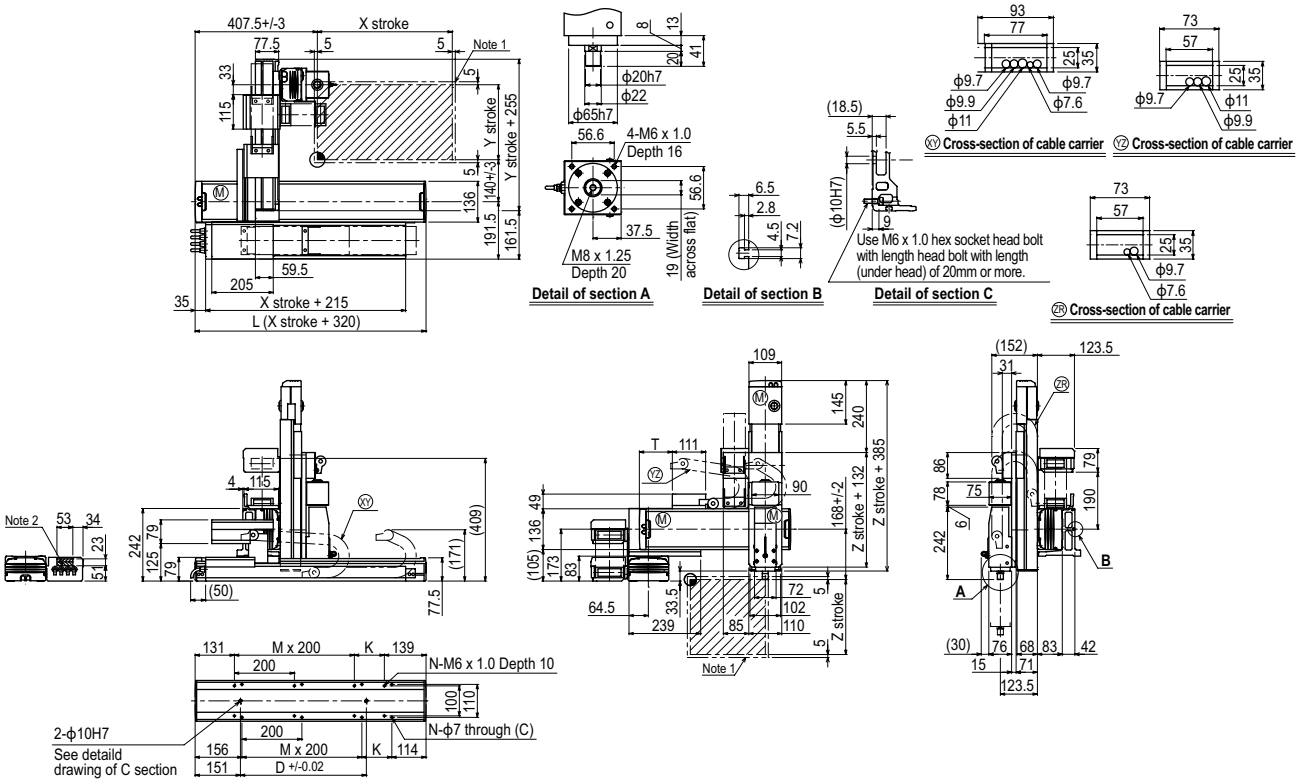

X stroke	150	250	350	450	550	650	750	850	950	1050
L	470	570	670	770	870	970	1070	1170	1270	1370
K	200	100	200	100	200	100	200	100	200	100
D	240	240	420	420	600	600	780	960	960	1140
M	0	1	1	2	2	3	3	4	4	5
N	4	6	6	8	8	10	10	12	12	14

Y stroke	150	250	350	450	550
T	55	110	165	220	275

Z stroke	150	250	350

Maximum speed for each stroke (mm/sec) Note 3						
X-axis	1200	960	780	600	540
Speed setting	–	80%	65%	50%	45%

Note 1. The moving range when returning to origin and the stop position when stopping by the mechanical stopper.
Note 2. The shaded position indicates an user cable extraction port.

Note 3. When the X-axis stroke is longer than 750mm, resonance of the ball screw may occur depending on the operation conditions (critical speed). In this case, reduce the speed setting on the program by referring to the maximum speeds shown in the table at the left.

Controller RCX340 ▶ 636

SXYx 4 axes / ZRFH

Arm type | Cable carrier | Z-axis: clamped table / moving base type (200W)+R-axis

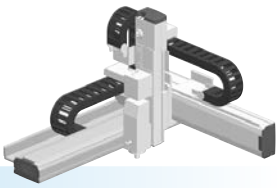

Ordering method

SXYx - C - [ ] - [ ] - [ ] - ZRFH - [ ] - [ ] - RCX340-4 - [ ] - [ ] - [ ] - [ ] - [ ] - [ ] - [ ]

Model	Cable	Combination	X-axis stroke	Y-axis stroke	ZR-axis	Z-axis stroke	Cable	Controller / Number of controllable axes	Safety standard	Option A (OP.A)	Option B (OP.B)	Option C (OP.C)	Option D (OP.D)	Option E (OP.E)	Absolute battery
		A1 A2 A3 A4	15 to 105cm	15 to 55cm		15 to 35cm	3L: 3.5m 5L: 5m 10L: 10m								

Specify various controller setting items. RCX340 ▶ P.636

Specification

	X-axis	Y-axis	Z-axis	R-axis
Axis construction Note 1	F14H	F14	F10H-BK	R5
AC servo motor output (W)	200	100	200	50
Repeatability Note 2 (XYZ: mm) (R: °)	+/-0.01	+/-0.01	+/-0.01	+/-0.0083
Drive system	Ball screw ϕ15	Ball screw ϕ15	Ball screw ϕ15	Harmonic gear
Ball screw lead Note 3 (Deceleration ratio) (mm)	20	20	10	(1/50)
Maximum speed Note 4 (XYZ: mm/sec) (R: °/sec)	1200	1200	600	360
Moving range (XYZ: mm)(R: °)	150 to 1050	150 to 550	150 to 350	360
Robot cable length (m)	Standard: 3.5 Option: 5,10			

Note 1. Use caution that the flame machining (installation holes, tap holes) differs from single-axis robots'.
Note 2. Positioning repeatability in one direction.
Note 3. Leads not listed in the catalog are also available. Contact us for details.
Note 4. When the X-axis stroke is longer than 750mm, resonance of the ball screw may occur depending on the operation conditions (critical speed). In this case, reduce the speed setting on the program by referring to the maximum speeds shown in the table below.

Maximum payload (kg)

	Z stroke (mm)		
Y stroke (mm)	150	250	350
150	9	8	7
250	6	5	4
350	4	3	1
450	2	1	–
550	1	–	–

Controller

Controller	Operation method
RCX340	Programming / I/O point trace / Remote command / Operation using RS-232C communication

SXYx 4 axes / ZRFH A1

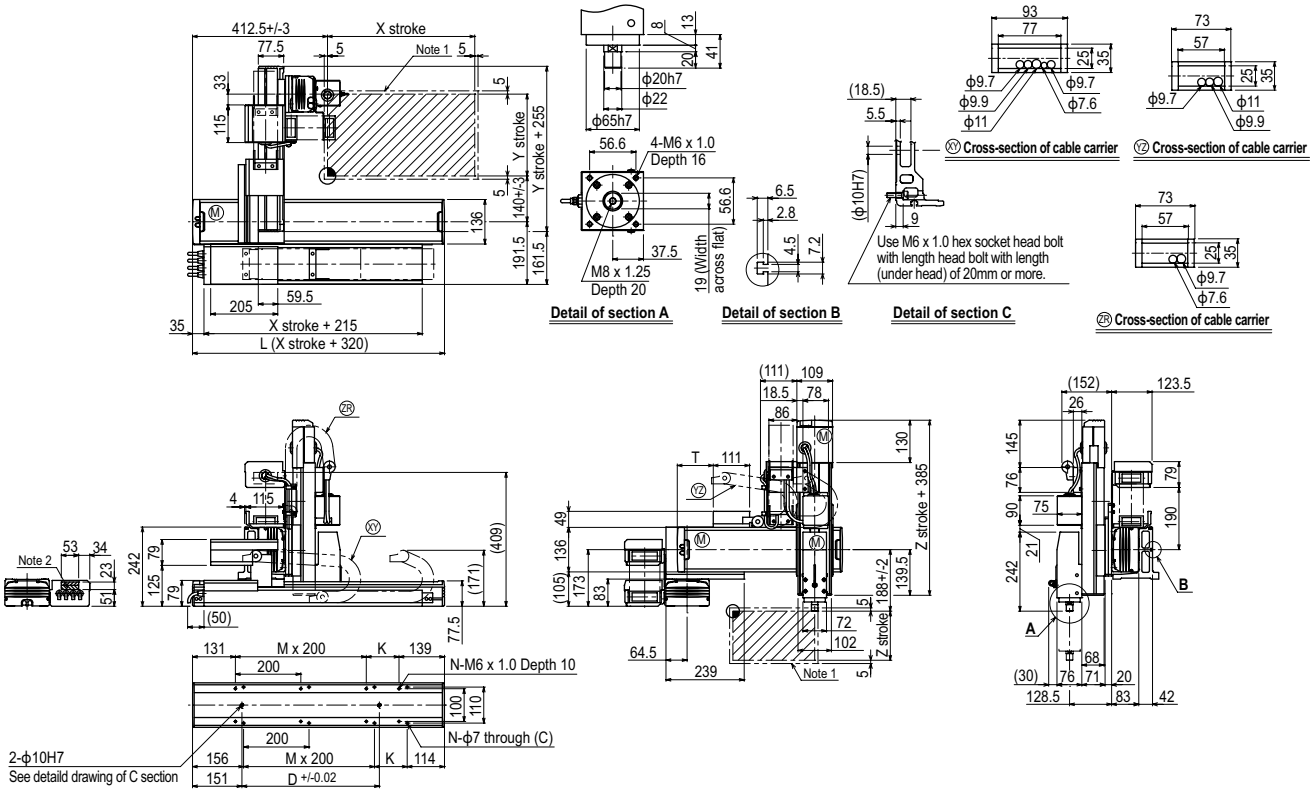

X stroke	150	250	350	450	550	650	750	850	950	1050
L	470	570	670	770	870	970	1070	1170	1270	1370
K	200	100	200	100	200	100	200	100	200	100
D	240	240	420	420	600	600	780	960	960	1140
M	0	1	1	2	2	3	3	4	4	5
N	4	6	6	8	8	10	10	12	12	14

Y stroke	150	250	350	450	550
T	55	110	165	220	275

Z stroke	150	250	350

Maximum speed for each stroke (mm/sec) Note 3						
X-axis	1200	960	780	600	540
Speed setting	–	80%	65%	50%	45%

Note 1. The moving range when returning to origin and the stop position when stopping by the mechanical stopper.
Note 2. The shaded position indicates an user cable extraction port.

Note 3. When the X-axis stroke is longer than 750mm, resonance of the ball screw may occur depending on the operation conditions (critical speed). In this case, reduce the speed setting on the program by referring to the maximum speeds shown in the table at the left.

Controller RCX340 ▶ 636

SXYx 4 axes / ZRS

Arm type | Cable carrier | ZR axis integrated type

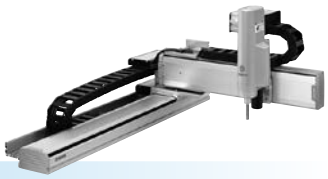

Ordering method

SXYx - C - [ ] - [ ] - [ ] - [ ] - **15** - [ ] - **RCX340-4** - [ ] - [ ] - [ ] - [ ] - [ ] - [ ] - [ ]

Model	Cable	Combination	X-axis stroke	Y-axis stroke	ZR-axis	Z-axis stroke	Cable	Controller / Number of controllable axes	Safety standard	Option A (OP.A)	Option B (OP.B)	Option C (OP.C)	Option D (OP.D)	Option E (OP.E)	Absolute battery
		A1 A2 A3 A4	15 to 105cm	15 to 65cm	ZRS12 ZRS6		3L: 3.5m 5L: 5m 10L: 10m								

Specify various controller setting items. RCX340 ▶ P.636

Specification

	X-axis	Y-axis	Z-axis: ZRS12	Z-axis: ZRS6	R-axis
Axis construction Note 1	F14H	F14	–		–
AC servo motor output (W)	200	100	60		100
Repeatability Note 2 (XYZ: mm) (R: °)	+/-0.01	+/-0.01	+/-0.02		+/-0.005
Drive system	Ball screw ϕ15	Ball screw ϕ15	Ball screw ϕ12		Harmonic gear
Ball screw lead Note 3 (Deceleration ratio) (mm)	20	20	12	6	(1/50)
Maximum speed Note 4 (XYZ: mm/sec) (R: °/sec)	1200	1200	1000	500	1020
Moving range (XYZ: mm) (R: °)	150 to 1050	150 to 650	150		360
Robot cable length (m)	Standard: 3.5 Option: 5,10				

Note 1. Use caution that the flame machining (installation holes, tap holes) differs from single-axis robots'.
Note 2. Positioning repeatability in one direction.
Note 3. Leads not listed in the catalog are also available. Contact us for details.
Note 4. When the X-axis stroke is longer than 750mm, resonance of the ball screw may occur depending on the operation conditions (critical speed). In this case, reduce the speed setting on the program by referring to the maximum speeds shown in the table below.

Maximum payload (kg)

Y stroke (mm)	ZRS12	ZRS6
150	3	5
250	3	5
350	3	5
450	3	5
550	3	5
650	3	4

Controller

Controller	Operation method
RCX340	Programming / I/O point trace / Remote command / Operation using RS-232C communication

SXYx 4 axes / ZRS A1

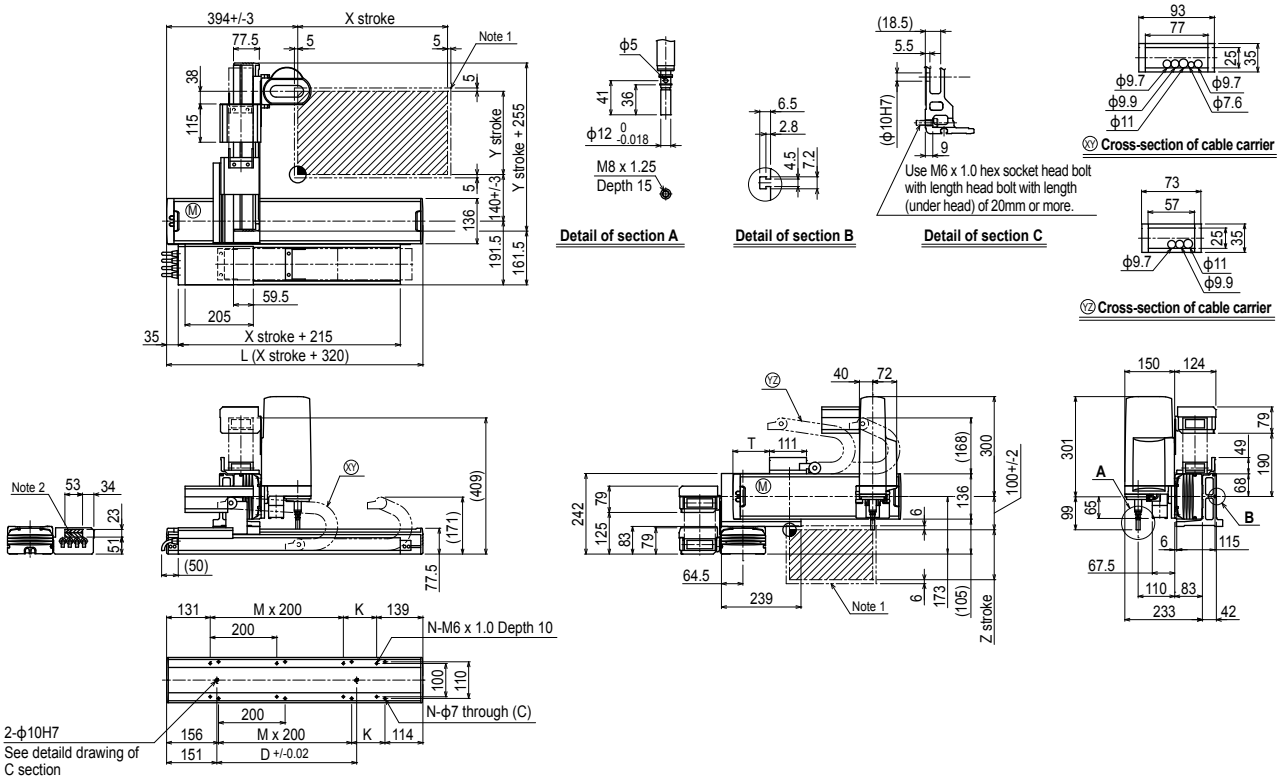

X stroke	150	250	350	450	550	650	750	850	950	1050
L	470	570	670	770	870	970	1070	1170	1270	1370
K	200	100	200	100	200	100	200	100	200	100
D	240	240	420	420	600	600	780	960	960	1140
M	0	1	1	2	2	3	3	4	4	5
N	4	6	6	8	8	10	10	12	12	14

Y stroke	150	250	350	450	550	650
T	55	110	165	220	275	330

Z stroke	150

Maximum speed for each stroke (mm/sec) Note 3					
X-axis	1200	960	780	600	540
Speed setting	–	80%	65%	50%	45%

Note 1. The moving range when returning to origin and the stop position when stopping by the mechanical stopper.
Note 2. The shaded position indicates an user cable extraction port.

Note 3. When the X-axis stroke is longer than 750mm, resonance of the ball screw may occur depending on the operation conditions (critical speed). In this case, reduce the speed setting on the program by referring to the maximum speeds shown in the table at the left.

Controller RCX340 ▶ 636

SXYx 4 axes / ZRS

Arm type | Whipover | ZR axis integrated type

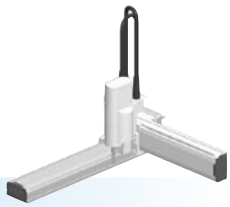

Ordering method

SXYx - S	-		-		-		-	15	-		-	RCX340-4	-		-		-		-		-		-	
Model	Cable	Combination	X-axis stroke	Y-axis stroke	ZR-axis	Z-axis stroke	Cable	Controller / Number of controllable axes	Safety standard	Option A (OP.A)	Option B (OP.B)	Option C (OP.C)	Option D (OP.D)	Option E (OP.E)	Absolute battery
		A1 A2 A3 A4	15 to 85cm	15 to 65cm	ZRS12 ZRS6		3L: 3.5m 5L: 5m 10L: 10m								

Specify various controller setting items. RCX340 ▶ P.636

Specification

	X-axis	Y-axis	Z-axis: ZRS12	Z-axis: ZRS6	R-axis
Axis construction Note 1	F14H	F14	–		–
AC servo motor output (W)	200	100	60		100
Repeatability Note 2 (XYZ: mm) (R: °)	+/-0.01	+/-0.01	+/-0.02		+/-0.005
Drive system	Ball screw ϕ15	Ball screw ϕ15	Ball screw ϕ12		Harmonic gear
Ball screw lead Note 3 (Deceleration ratio) (mm)	20	20	12	6	(1/50)
Maximum speed Note 4 (XYZ: mm/sec) (R: °/sec)	1200	1200	1000	500	1020
Moving range (XYZ: mm) (R: °)	150 to 850	150 to 650	150		360
Robot cable length (m)	Standard: 3.5 Option: 5,10				

Note 1. Use caution that the flame machining (installation holes, tap holes) differs from single-axis robots'.
Note 2. Positioning repeatability in one direction.
Note 3. Leads not listed in the catalog are also available. Contact us for details.
Note 4. When the X-axis stroke is longer than 750mm, resonance of the ball screw may occur depending on the operation conditions (critical speed). In this case, reduce the speed setting on the program by referring to the maximum speeds shown in the table below.

Maximum payload (kg)

Y stroke (mm)	ZRS12	ZRS6
150	3	5
250	3	5
350	3	5
450	3	5
550	3	5
650	3	4

Controller

Controller	Operation method
RCX340	Programming / I/O point trace / Remote command / Operation using RS-232C communication

SXYx 4 axes / ZRS A1

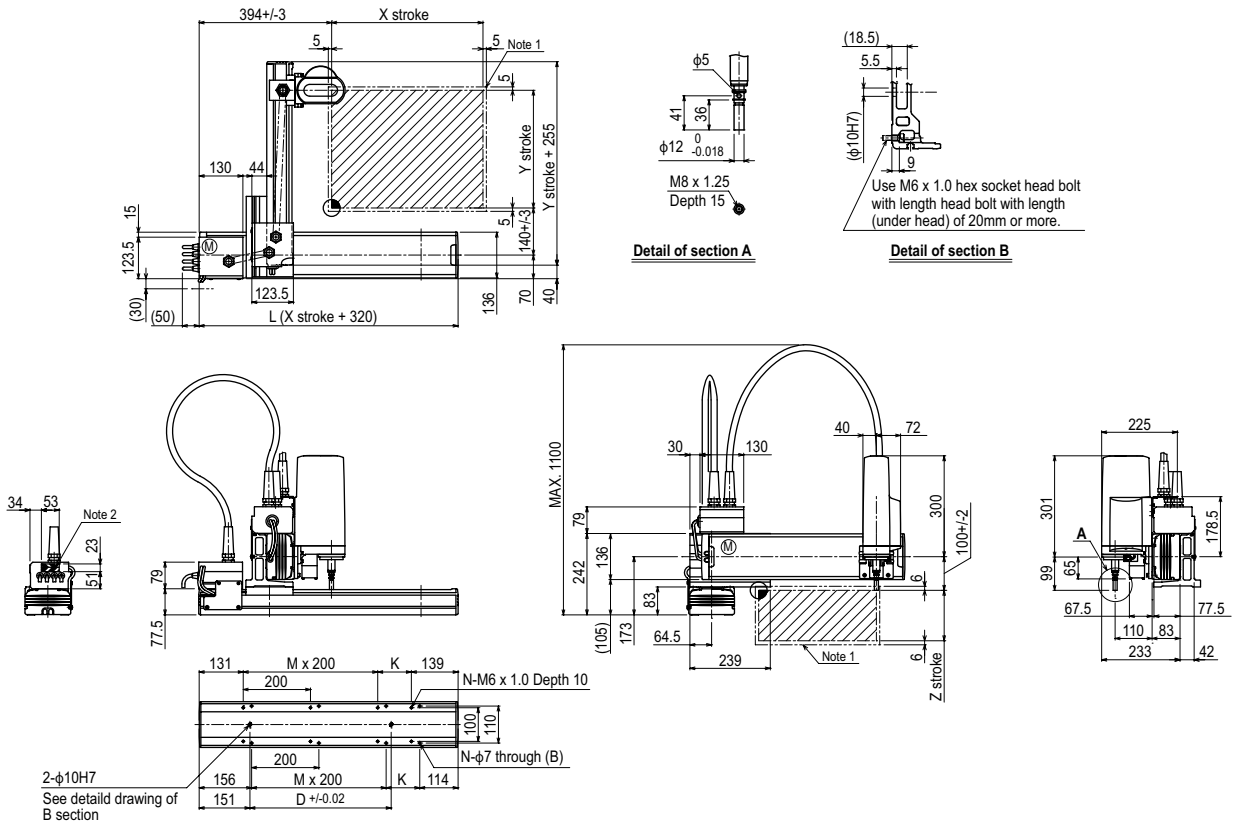

X stroke	150	250	350	450	550	650	750	850
L	470	570	670	770	870	970	1070	1170
K	200	100	200	100	200	100	200	100
D	240	240	420	420	600	600	780	960
M	0	1	1	2	2	3	3	4
N	4	6	6	8	8	10	10	12

Y stroke	150	250	350	450	550	650

Z stroke	150

Maximum speed for each stroke (mm/sec) Note 3				
	X-axis	1200	960	780
	Speed setting	–	80%	65%

Note 1.The moving range when returning to origin and the stop position when stopping by the mechanical stopper.
Note 2.The shaded position indicates an user cable extraction port.

Note 3. When the X-axis stroke is longer than 750mm, resonance of the ball screw may occur depending on the operation conditions (critical speed). In this case, reduce the speed setting on the program by referring to the maximum speeds shown in the table at the left.

Controller RCX340 ▶ 636

SXYBx 2 axes

Arm type Cable carrier

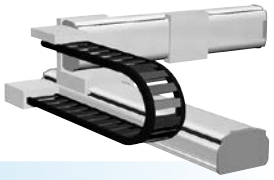

Ordering method

SXYBx - C	-		-		-		-	RCX320-2	-		-		-		-		-	
Model	Cable	Combination	X-axis stroke	Y-axis stroke	Cable	Controller / Number of controllable axes	Safety standard	Regenerative unit Note 1	Option A (OP.A)	Option B (OP.B)	Vision System	Absolute battery
		A1 A2 A3 A4	15 to 305cm	15 to 55cm	3L: 3.5m 5L: 5m 10L: 10m							

Specify various controller setting items. RCX320 ▶ P.626

Note 1. A regenerative unit is required when the maximum speed exceeds 1250mm/sec.

Specification

	X-axis	Y-axis
Axis construction Note 1	B14H	B14
AC servo motor output (W)	200	100
Repeatability Note 2 (mm)	+/-0.04	+/-0.04
Drive system	Timing belt	Timing belt
Ball screw lead Note 3 (Deceleration ratio) (mm)	Equivalent to lead 25	Equivalent to lead 25
Maximum speed (mm/sec)	1875	1875
Moving range (mm)	150 to 3050	150 to 550
Robot cable length (m)	Standard: 3.5 Option: 5,10	

Note 1. Use caution that the flame machining (installation holes, tap holes) differs from single-axis robots'.
Note 2. Positioning repeatability in one direction.
Note 3. Leads not listed in the catalog are also available. Contact us for details.

Maximum payload (kg)

Y stroke (mm)	XY 2 axes
150	14
250	12
350	10
450	8
550	7

Controller

Controller	Operation method
RCX320	Programming / I/O point trace / Remote command / Operation using RS-232C communication

Note. A regenerative unit is required when the maximum speed exceeds 1250mm/sec.

SXYBx 2 axes A1

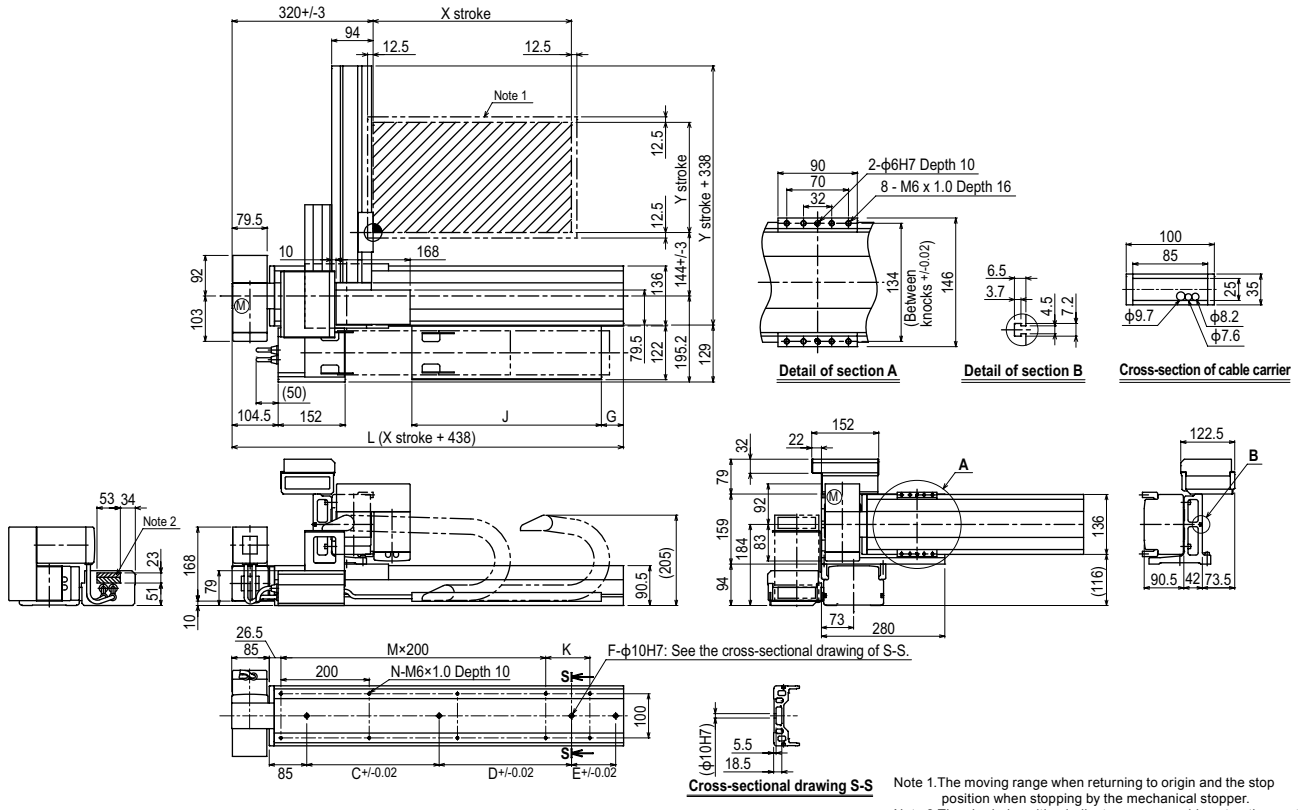

Note 1.The moving range when returning to origin and the stop position when stopping by the mechanical stopper.
Note 2.The shaded position indicates an user cable extraction port.

X stroke	150	250	350	450	550	650	750	850	950	1050	1150	1250	1350	1450	1550	1650	1750	1850	1950	2050	2150	2250	2350	2450	2550	2650	2750	2850	2950	3050
L	588	688	788	888	988	1088	1188	1288	1388	1488	1588	1688	1788	1888	1988	2088	2188	2288	2388	2488	2588	2688	2788	2888	2988	3088	3188	3288	3388	3488
K	200	100	200	100	200	100	200	100	200	100	200	100	200	100	200	100	200	100	200	100	200	100	200	100	200	100	200	100	200	100
C	240	420	600	600	780	780	960	960	1140	1140	1140	1140	1140	1140	1140	1140	1140	1140	1140	1140	1140	1140	1140	1140	1140	1140	1140	1140	1140	1140
D	-	-	-	-	-	-	-	-	-	-	240	240	240	420	600	600	780	780	960	960	1140	1140	1140	1140	1140	1140	1140	1140	1140	1140
E	-	-	-	-	-	-	-	-	-	-	-	-	-	-	-	-	-	-	-	-	-	-	240	240	420	420	600	600	780	960
F	2	2	2	2	2	2	2	2	2	2	3	3	3	3	3	3	3	3	3	3	3	3	4	4	4	4	4	4	4	4
M	1	2	2	3	3	4	4	5	5	6	6	7	7	8	8	9	9	10	10	11	11	12	12	13	13	14	14	15	15	16
N	6	8	8	10	10	12	12	14	14	16	16	18	18	20	20	22	22	24	24	26	26	28	28	30	30	32	32	34	34	36
G	0	50	0	50	0	50	0	50	0	50	0	50	0	50	0	50	0	50	0	50	0	50	0	50	0	50	0	50	0	50
J	330	330	430	430	530	530	630	630	730	730	830	830	930	930	1030	1030	1130	1130	1230	1230	1330	1330	1430	1430	1530	1530	1630	1630	1730	1730

Y stroke	150	250	350	450	550

Controller RCX320 ▶ 626

SXYBx 2 axes A2

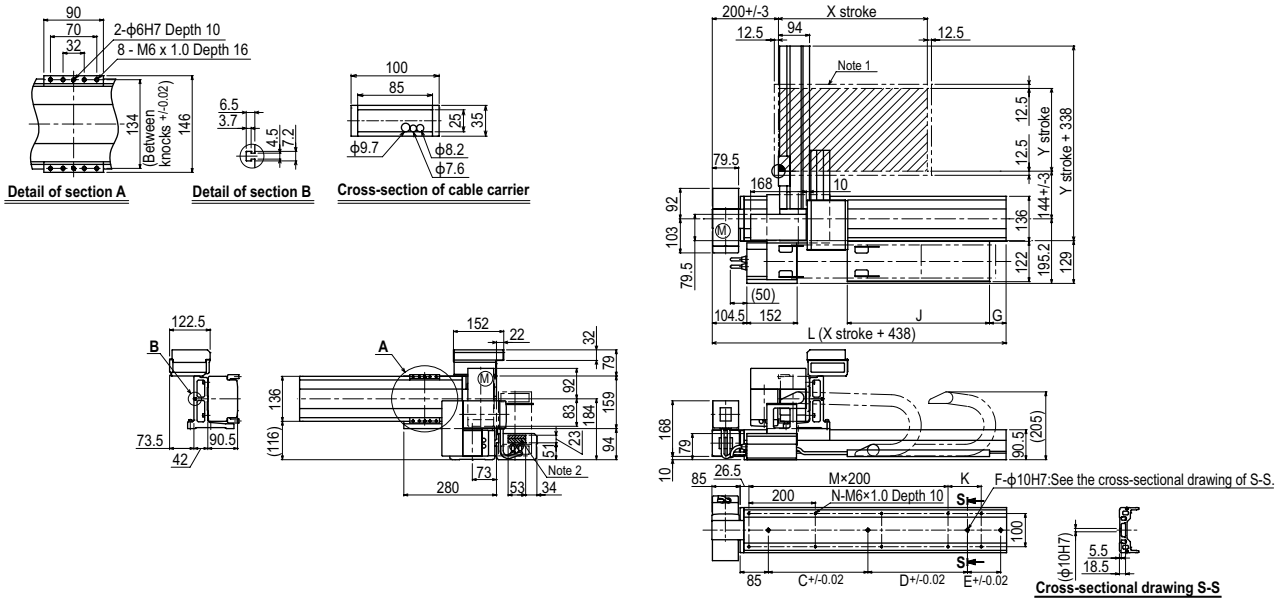

SXYBx 2 axes A3

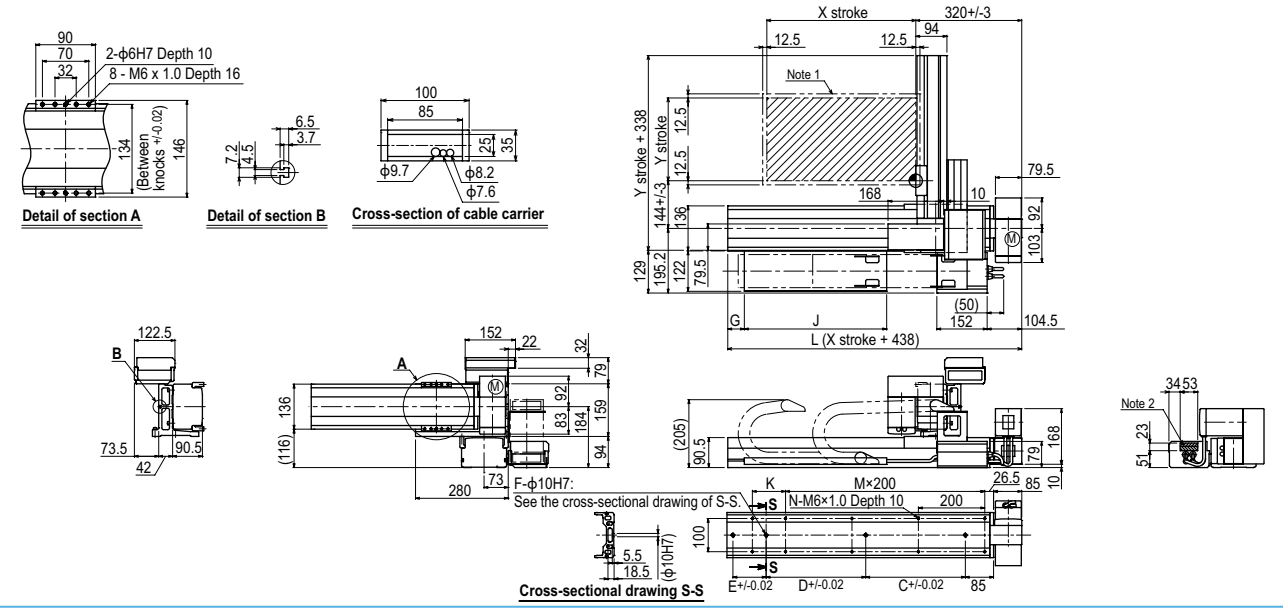

SXYBx 2 axes A4

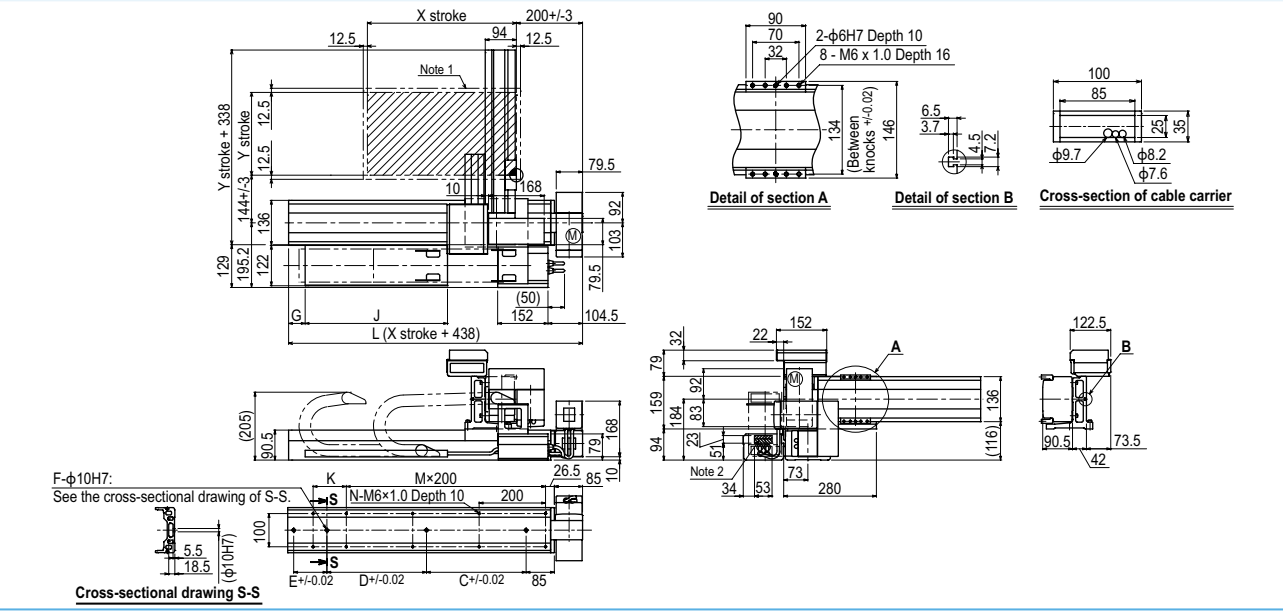

SXYBx 3 axes / ZF

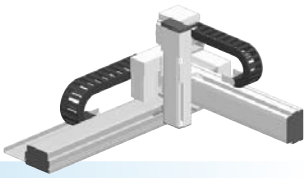

Arm type | Cable carrier | Z-axis: clamped base / moving table type (100W)

Ordering method

SXYBx - C - [ ] - [ ] - [ ] - ZF - [ ] - [ ] - RCX340-3 - [ ] - [ ] - [ ] - [ ] - [ ] - [ ] - [ ]

Model	Cable	Combination	X-axis stroke	Y-axis stroke	ZR-axis	Z-axis stroke	Cable	Controller / Number of controllable axes	Safety standard	Option A (OP.A)	Option B (OP.B)	Option C (OP.C)	Option D (OP.D)	Option E (OP.E)	Absolute battery
		A1 A2 A3 A4	15 to 305cm	15 to 55cm		15 to 35cm	3L: 3.5m 5L: 5m 10L: 10m								

Specify various controller setting items. RCX340 ▶ P.636

Specification

	X-axis	Y-axis	Z-axis
Axis construction Note 1	B14H	B14	F10-BK
AC servo motor output (W)	200	100	100
Repeatability Note 2 (mm)	+/-0.04	+/-0.04	+/-0.01
Drive system	Timing belt	Timing belt	Ball screw ϕ15
Ball screw lead Note 3 (Deceleration ratio) (mm)	Equivalent to lead 25	Equivalent to lead 25	10
Maximum speed (mm/sec)	1875	1875	600
Moving range (mm)	150 to 3050	150 to 550	150 to 350
Robot cable length (m)	Standard: 3.5 Option: 5,10		

Note 1.Use caution that the flame machining (installation holes, tap holes) differs from single-axis robots'.
Note 2.Positioning repeatability in one direction.
Note 3. Leads not listed in the catalog are also available. Contact us for details.

Maximum payload (kg)

	Z stroke (mm)		
Y stroke (mm)	150	250	350
150	8	7	6
250	6	5	4
350	4	3	2
450	2	1	–
550	1	–	–

Controller

Controller	Operation method
RCX340	Programming / I/O point trace / Remote command / Operation using RS-232C communication

SXYBx 3 axes / ZF A1

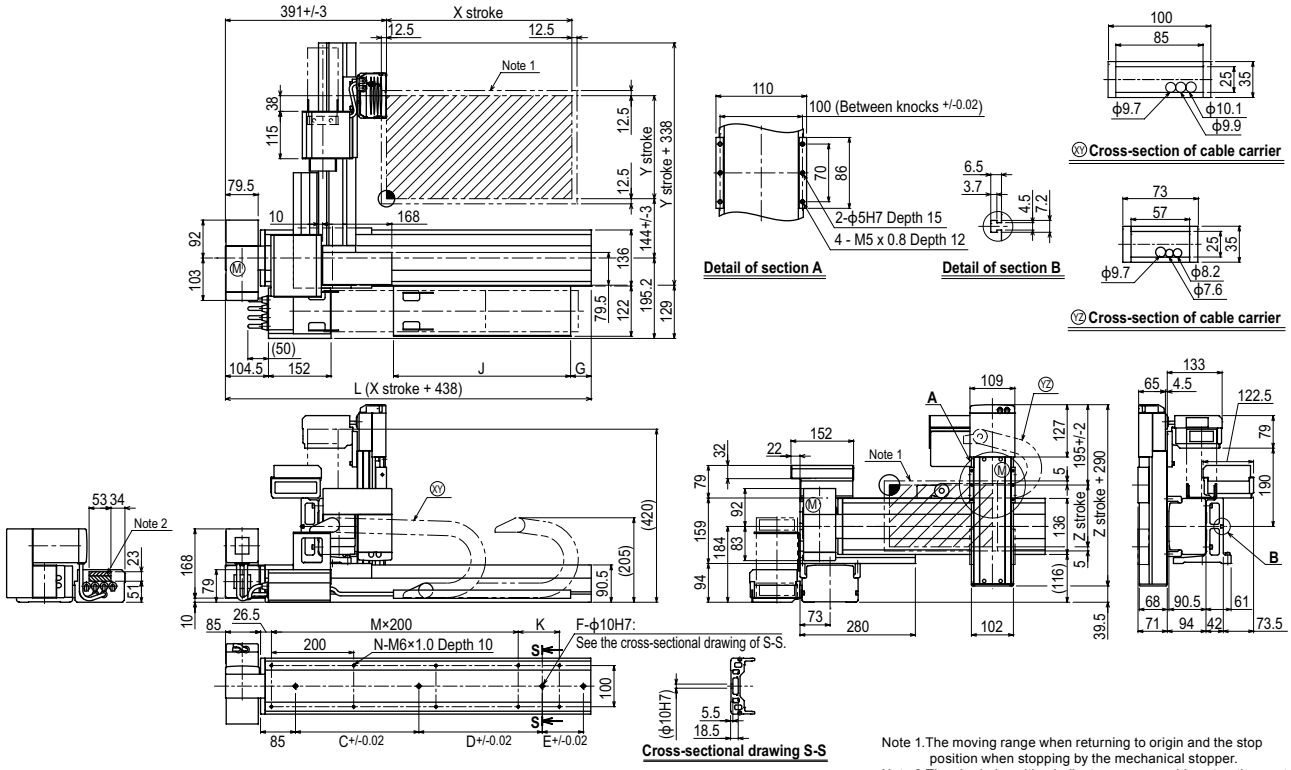

Note 1.The moving range when returning to origin and the stop position when stopping by the mechanical stopper.
Note 2.The shaded position indicates an user cable extraction port.

X stroke	150	250	350	450	550	650	750	850	950	1050	1150	1250	1350	1450	1550	1650	1750	1850	1950	2050	2150	2250	2350	2450	2550	2650	2750	2850	2950	3050
L	588	688	788	888	988	1088	1188	1288	1388	1488	1588	1688	1788	1888	1988	2088	2188	2288	2388	2488	2588	2688	2788	2888	2988	3088	3188	3288	3388	3488
K	200	100	200	100	200	100	200	100	200	100	200	100	200	100	200	100	200	100	200	100	200	100	200	100	200	100	200	100	200	100
C	240	420	600	600	780	780	960	960	1140	1140	1140	1140	1140	1140	1140	1140	1140	1140	1140	1140	1140	1140	1140	1140	1140	1140	1140	1140	1140	1140
D	-	-	-	-	-	-	-	-	-	-	240	240	240	420	600	600	780	780	960	960	1140	1140	1140	1140	1140	1140	1140	1140	1140	1140
E	-	-	-	-	-	-	-	-	-	-	-	-	-	-	-	-	-	-	-	-	-	-	240	240	420	420	600	600	780	960
F	2	2	2	2	2	2	2	2	2	2	3	3	3	3	3	3	3	3	3	3	3	3	4	4	4	4	4	4	4	4
M	1	2	2	3	3	4	4	5	5	6	6	7	7	8	8	9	9	10	10	11	11	12	12	13	13	14	14	15	15	16
N	6	8	8	10	10	12	12	14	14	16	16	18	18	20	20	22	22	24	24	26	26	28	28	30	30	32	32	34	34	36
G	0	50	0	50	0	50	0	50	0	50	0	50	0	50	0	50	0	50	0	50	0	50	0	50	0	50	0	50	0	50
J	330	330	430	430	530	530	630	630	730	730	830	830	930	930	1030	1030	1130	1130	1230	1230	1330	1330	1430	1430	1530	1530	1630	1630	1730	1730

Y stroke	150	250	350	450	550

Z stroke	150	250	350

Controller RCX340 ▶ 636

SXYBx

3 axes / ZFL20

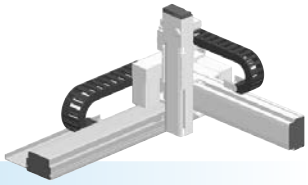

- Arm type
- Cable carrier
- Z-axis: clamped base / moving table type (200W)

Ordering method

SXYBx - C - [ ] - [ ] - [ ] - ZFL20 - [ ] - [ ] - RCX340-3 - [ ] - [ ] - [ ] - [ ] - [ ] - [ ] - [ ]

Model	Cable	Combination	X-axis stroke	Y-axis stroke	ZR-axis	Z-axis stroke	Cable	Controller / Number of controllable axes	Safety standard	Option A (OP.A)	Option B (OP.B)	Option C (OP.C)	Option D (OP.D)	Option E (OP.E)	Absolute battery
		A1 A2 A3 A4	15 to 305cm	15 to 45cm		15 to 35cm	3L: 3.5m 5L: 5m 10L: 10m								

Specify various controller setting items. RCX340 ▶ P.636

Specification

	X-axis	Y-axis	Z-axis
Axis construction Note 1	B14H	B14	F10H-BK
AC servo motor output (W)	200	100	200
Repeatability Note 2 (mm)	+/-0.04	+/-0.04	+/-0.01
Drive system	Timing belt	Timing belt	Ball screw ϕ15
Ball screw lead Note 3 (Deceleration ratio) (mm)	Equivalent to lead 25	Equivalent to lead 25	20
Maximum speed (mm/sec)	1875	1875	1200
Moving range (mm)	150 to 3050	150 to 450	150 to 350
Robot cable length (m)	Standard: 3.5 Option: 5,10		

Note 1. Use caution that the flame machining (installation holes, tap holes) differs from single-axis robots'.
Note 2. Positioning repeatability in one direction.
Note 3. Leads not listed in the catalog are also available. Contact us for details.

Maximum payload (kg)

	Z stroke (mm)		
Y stroke (mm)	150	250	350
150	7	6	5
250	5	4	3
350	3	2	1
450	1	–	–

Controller

Controller	Operation method
RCX340	Programming / I/O point trace / Remote command / Operation using RS-232C communication

SXYBx 3 axes / ZFL20 A1

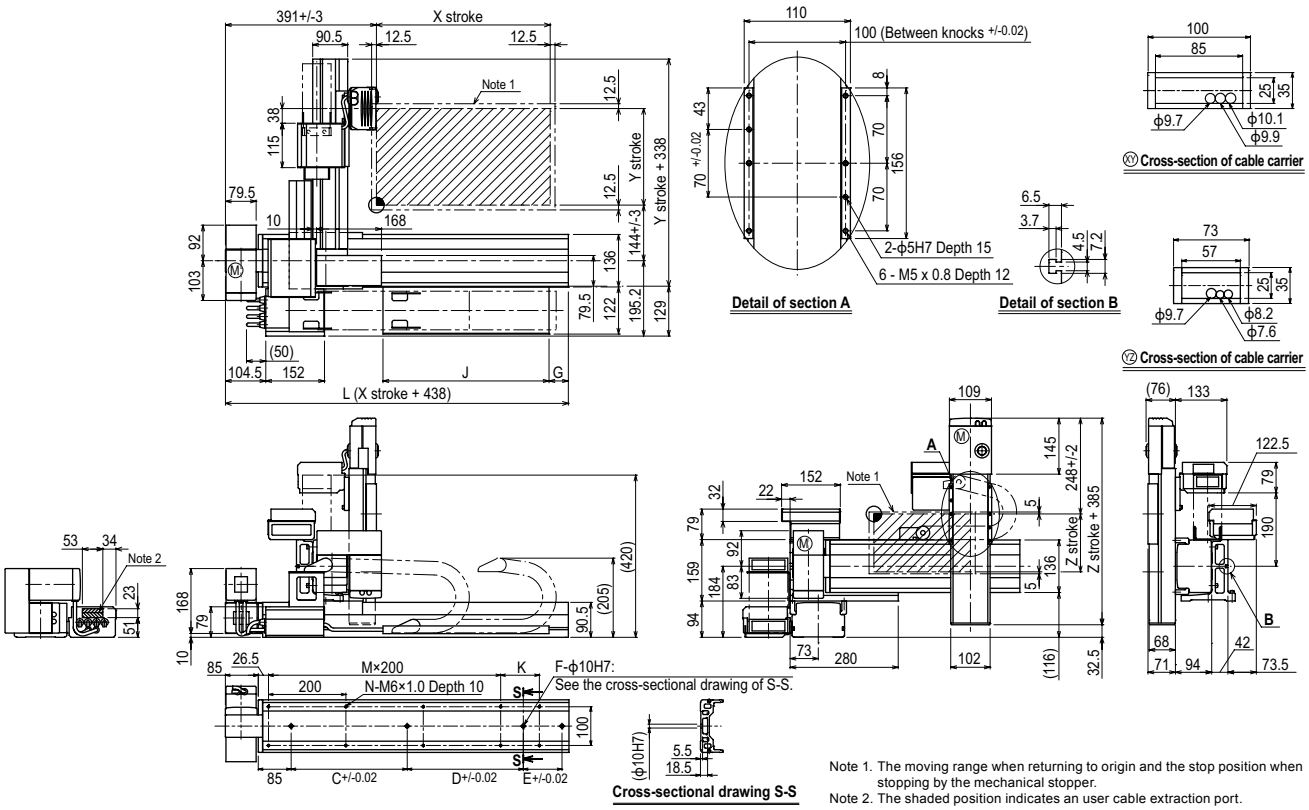

Note 1. The moving range when returning to origin and the stop position when stopping by the mechanical stopper.
Note 2. The shaded position indicates an user cable extraction port.

X stroke	150	250	350	450	550	650	750	850	950	1050	1150	1250	1350	1450	1550	1650	1750	1850	1950	2050	2150	2250	2350	2450	2550	2650	2750	2850	2950	3050
L	588	688	788	888	988	1088	1188	1288	1388	1488	1588	1688	1788	1888	1988	2088	2188	2288	2388	2488	2588	2688	2788	2888	2988	3088	3188	3288	3388	3488
K	200	100	200	100	200	100	200	100	200	100	200	100	200	100	200	100	200	100	200	100	200	100	200	100	200	100	200	100	200	100
C	240	420	600	600	780	780	960	960	1140	1140	1140	1140	1140	1140	1140	1140	1140	1140	1140	1140	1140	1140	1140	1140	1140	1140	1140	1140	1140	1140
D	-	-	-	-	-	-	-	-	-	-	240	240	240	420	600	600	780	780	960	960	1140	1140	1140	1140	1140	1140	1140	1140	1140	1140
E	-	-	-	-	-	-	-	-	-	-	-	-	-	-	-	-	-	-	-	-	-	-	240	240	420	420	600	600	780	960
F	2	2	2	2	2	2	2	2	2	2	3	3	3	3	3	3	3	3	3	3	3	3	4	4	4	4	4	4	4	4
M	1	2	2	3	3	4	4	5	5	6	6	7	7	8	8	9	9	10	10	11	11	12	12	13	13	14	14	15	15	16
N	6	8	8	10	10	12	12	14	14	16	16	18	18	20	20	22	22	24	24	26	26	28	28	30	30	32	32	34	34	36
G	0	50	0	50	0	50	0	50	0	50	0	50	0	50	0	50	0	50	0	50	0	50	0	50	0	50	0	50	0	50
J	330	330	430	430	530	530	630	630	730	730	830	830	930	930	1030	1030	1130	1130	1230	1230	1330	1330	1430	1430	1530	1530	1630	1630	1730	1730

Y stroke	150	250	350	450
Z stroke	150	250	350	

Controller RCX340 ▶ 636

SXYBx 3 axes / ZFH

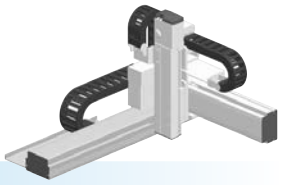

Arm type | Cable carrier | Z-axis: clamped table / moving base type (200W)

Ordering method

SXYBx - C - □ - □ - □ - ZFH - □ - □ - RCX340-3 - □ - □ - □ - □ - □ - □ - □

Model	Cable	Combination	X-axis stroke	Y-axis stroke	ZR-axis	Z-axis stroke	Cable	Controller / Number of controllable axes	Safety standard	Option A (OP.A)	Option B (OP.B)	Option C (OP.C)	Option D (OP.D)	Option E (OP.E)	Absolute battery
		A1 A2 A3 A4	15 to 305cm	15 to 45cm		15 to 35cm	3L: 3.5m 5L: 5m 10L: 10m								

Specify various controller setting items. RCX340 ▶ P.636

Specification

	X-axis	Y-axis	Z-axis
Axis construction Note 1	B14H	B14	F10H-BK
AC servo motor output (W)	200	100	200
Repeatability Note 2 (mm)	+/-0.04	+/-0.04	+/-0.01
Drive system	Timing belt	Timing belt	Ball screw ϕ15
Ball screw lead Note 3 (Deceleration ratio) (mm)	Equivalent to lead 25	Equivalent to lead 25	10
Maximum speed (mm/sec)	1875	1875	600
Moving range (mm)	150 to 3050	150 to 450	150 to 350
Robot cable length (m)	Standard: 3.5 Option: 5,10		

Note 1. Use caution that the flame machining (installation holes, tap holes) differs from single-axis robots'.
Note 2. Positioning repeatability in one direction.
Note 3. Leads not listed in the catalog are also available. Contact us for details.

Maximum payload (kg)

	Z stroke (mm)		
Y stroke (mm)	150	250	350
150	7	6	5
250	5	4	3
350	3	2	1
450	1	–	–

Controller

Controller	Operation method
RCX340	Programming / I/O point trace / Remote command / Operation using RS-232C communication

SXYBx 3 axes / ZFH A1

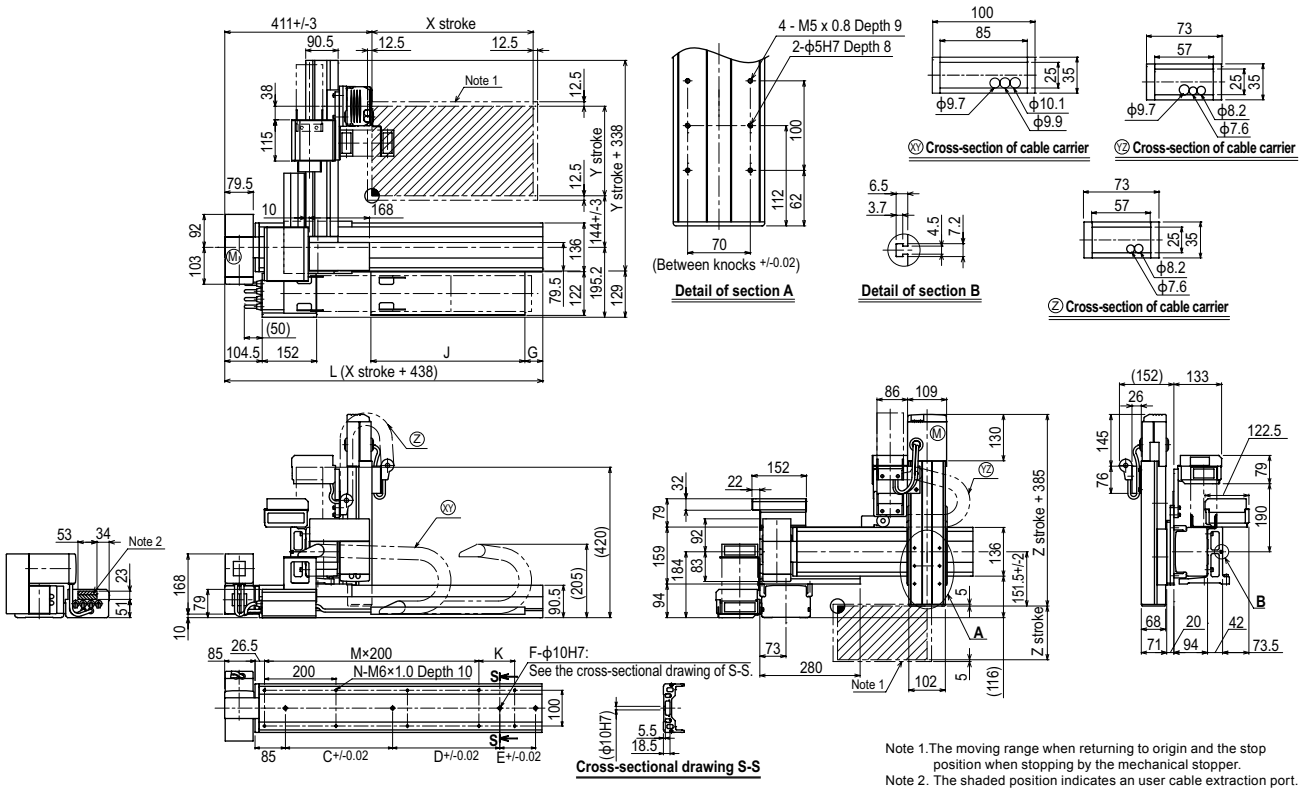

Note 1.The moving range when returning to origin and the stop position when stopping by the mechanical stopper.
Note 2. The shaded position indicates an user cable extraction port.

X stroke	150	250	350	450	550	650	750	850	950	1050	1150	1250	1350	1450	1550	1650	1750	1850	1950	2050	2150	2250	2350	2450	2550	2650	2750	2850	2950	3050
L	588	688	788	888	988	1088	1188	1288	1388	1488	1588	1688	1788	1888	1988	2088	2188	2288	2388	2488	2588	2688	2788	2888	2988	3088	3188	3288	3388	3488
K	200	100	200	100	200	100	200	100	200	100	200	100	200	100	200	100	200	100	200	100	200	100	200	100	200	100	200	100	200	100
C	240	420	600	600	780	780	960	960	1140	1140	1140	1140	1140	1140	1140	1140	1140	1140	1140	1140	1140	1140	1140	1140	1140	1140	1140	1140	1140	1140
D	-	-	-	-	-	-	-	-	-	-	240	240	240	420	600	600	780	780	960	960	1140	1140	1140	1140	1140	1140	1140	1140	1140	1140
E	-	-	-	-	-	-	-	-	-	-	-	-	-	-	-	-	-	-	-	-	-	-	240	240	420	420	600	600	780	960
F	2	2	2	2	2	2	2	2	2	2	3	3	3	3	3	3	3	3	3	3	3	3	4	4	4	4	4	4	4	4
M	1	2	2	3	3	4	4	5	5	6	6	7	7	8	8	9	9	10	10	11	11	12	12	13	13	14	14	15	15	16
N	6	8	8	10	10	12	12	14	14	16	16	18	18	20	20	22	22	24	24	26	26	28	28	30	30	32	32	34	34	36
G	0	50	0	50	0	50	0	50	0	50	0	50	0	50	0	50	0	50	0	50	0	50	0	50	0	50	0	50	0	50
J	330	330	430	430	530	530	630	630	730	730	830	830	930	930	1030	1030	1130	1130	1230	1230	1330	1330	1430	1430	1530	1530	1630	1630	1730	1730

Y stroke	150	250	350	450
Z stroke	150	250	350	

Controller RCX340 ▶ 636

SXYBx 3 axes / ZS

Arm type | Cable carrier | Z-axis shaft vertical type

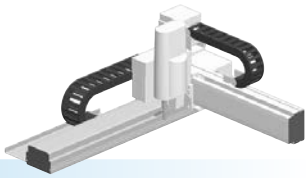

Ordering method

SXYBx - C	-	-	-	- ZS - 15	-	- RCX340-3	-	-	-	-	-	-	-
Model	Cable	Combination	X-axis stroke	Y-axis stroke	ZR-axis	Z-axis stroke	Cable	Controller / Number of controllable axes	Safety standard	Option A (OP.A)	Option B (OP.B)	Option C (OP.C)	Option D (OP.D)	Option E (OP.E)	Absolute battery
		A1 A2 A3 A4	15 to 305cm	15 to 55cm	ZS12 ZS6		3L: 3.5m 5L: 5m 10L: 10m								

Specify various controller setting items. RCX340 ▶ P.636

Specification

	X-axis	Y-axis	Z-axis: ZS12	Z-axis: ZS6
Axis construction Note 1	B14H	B14	–	
AC servo motor output (W)	200	100	60	
Repeatability Note 2 (mm)	+/-0.04	+/-0.04	+/-0.02	
Drive system	Timing belt	Timing belt	Ball screw ϕ12	
Ball screw lead Note 3 (Deceleration ratio) (mm)	Equivalent to lead 25	Equivalent to lead 25	12	6
Maximum speed (mm/sec)	1875	1875	1000	500
Moving range (mm)	150 to 3050	150 to 550	150	
Robot cable length (m)	Standard: 3.5 Option: 5,10			

Note 1. Use caution that the flame machining (installation holes, tap holes) differs from single-axis robots'.
Note 2. Positioning repeatability in one direction.
Note 3. Leads not listed in the catalog are also available. Contact us for details.

Maximum payload (kg)

Y stroke (mm)	ZS12	ZS6
150	3	5
250	3	5
350	3	5
450	3	4
550	3	3

Controller

Controller	Operation method
RCX340	Programming / I/O point trace / Remote command / Operation using RS-232C communication

SXYBx 3 axes / ZS A1

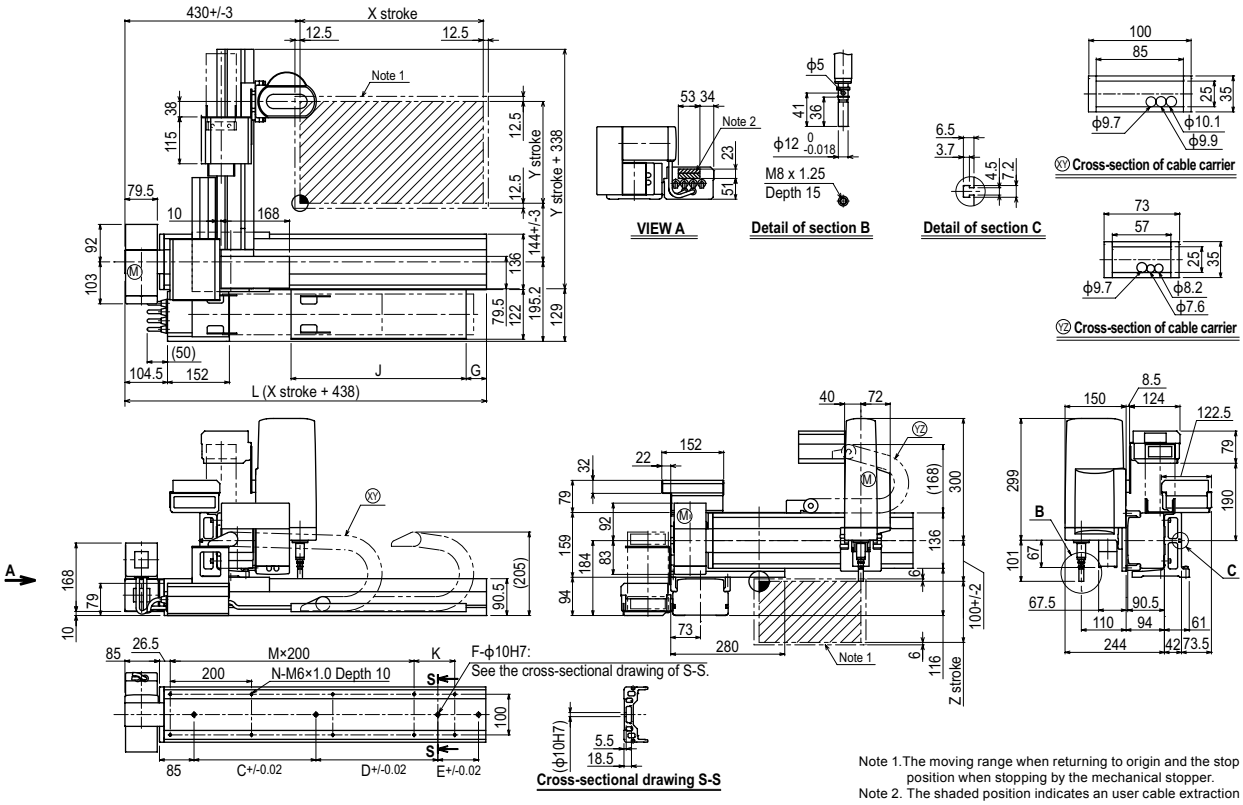

Note 1.The moving range when returning to origin and the stop position when stopping by the mechanical stopper.
Note 2. The shaded position indicates an user cable extraction port.

X stroke	150	250	350	450	550	650	750	850	950	1050	1150	1250	1350	1450	1550	1650	1750	1850	1950	2050	2150	2250	2350	2450	2550	2650	2750	2850	2950	3050
L	588	688	788	888	988	1088	1188	1288	1388	1488	1588	1688	1788	1888	1988	2088	2188	2288	2388	2488	2588	2688	2788	2888	2988	3088	3188	3288	3388	3488
K	200	100	200	100	200	100	200	100	200	100	200	100	200	100	200	100	200	100	200	100	200	100	200	100	200	100	200	100	200	100
C	240	420	600	600	780	780	960	960	1140	1140	1140	1140	1140	1140	1140	1140	1140	1140	1140	1140	1140	1140	1140	1140	1140	1140	1140	1140	1140	1140
D	-	-	-	-	-	-	-	-	-	-	240	240	240	420	600	600	780	780	960	960	1140	1140	1140	1140	1140	1140	1140	1140	1140	1140
E	-	-	-	-	-	-	-	-	-	-	-	-	-	-	-	-	-	-	-	-	-	-	240	240	420	420	600	600	780	960
F	2	2	2	2	2	2	2	2	2	2	3	3	3	3	3	3	3	3	3	3	3	3	4	4	4	4	4	4	4	4
M	1	2	2	3	3	4	4	5	5	6	6	7	7	8	8	9	9	10	10	11	11	12	12	13	13	14	14	15	15	16
N	6	8	8	10	10	12	12	14	14	16	16	18	18	20	20	22	22	24	24	26	26	28	28	30	30	32	32	34	34	36
G	0	50	0	50	0	50	0	50	0	50	0	50	0	50	0	50	0	50	0	50	0	50	0	50	0	50	0	50	0	50
J	330	330	430	430	530	530	630	630	730	730	830	830	930	930	1030	1030	1130	1130	1230	1230	1330	1330	1430	1430	1530	1530	1630	1630	1730	1730

Y stroke	150	250	350	450	550
Z stroke	150				

Controller RCX340 ▶ 636

SXYBx 4 axes / ZRS

Arm type | Cable carrier | ZR axis integrated type

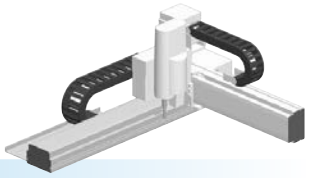

Ordering method

SXYBx - C - [ ] - [ ] - [ ] - [ ] - 15 - [ ] - RCX340-4 - [ ] - [ ] - [ ] - [ ] - [ ] - [ ] - [ ]

Model	Cable	Combination	X-axis stroke	Y-axis stroke	ZR-axis	Z-axis stroke	Cable	Controller / Number of controllable axes	Safety standard	Option A (OP.A)	Option B (OP.B)	Option C (OP.C)	Option D (OP.D)	Option E (OP.E)	Absolute battery
		A1 A2 A3 A4	15 to 305cm	15 to 55cm	ZRS12 ZRS6		3L: 3.5m 5L: 5m 10L: 10m								

Specify various controller setting items. RCX340 ▶ P636

Specification

	X-axis	Y-axis	Z-axis: ZRS12	Z-axis: ZRS6	R-axis
Axis construction Note 1	B14H	B14	–		–
AC servo motor output (W)	200	100	60		100
Repeatability Note 2 (XYZ: mm)(R: °)	+/-0.04	+/-0.04	+/-0.02		+/-0.005
Drive system	Timing belt	Timing belt	Ball screw ϕ12		Harmonic gear
Ball screw lead Note 3 (Deceleration ratio) (mm)	Equivalent to lead 25	Equivalent to lead 25	12	6	(1/50)
Maximum speed (XYZ: mm/sec)(R: °/sec)	1875	1875	1000	500	1020
Moving range (XYZ: mm)(R: °)	150 to 3050	150 to 550	150		360
Robot cable length (m)	Standard: 3.5 Option: 5,10				

Note 1. Use caution that the flame machining (installation holes, tap holes) differs from single-axis robots'.
Note 2. Positioning repeatability in one direction.
Note 3. Leads not listed in the catalog are also available. Contact us for details.

Maximum payload (kg)

Y stroke (mm)	ZRS12	ZRS6
150	3	5
250	3	5
350	3	5
450	3	3
550	2	2

Controller

Controller	Operation method
RCX340	Programming / I/O point trace / Remote command / Operation using RS-232C communication

SXYBx 4 axes / ZRS A1

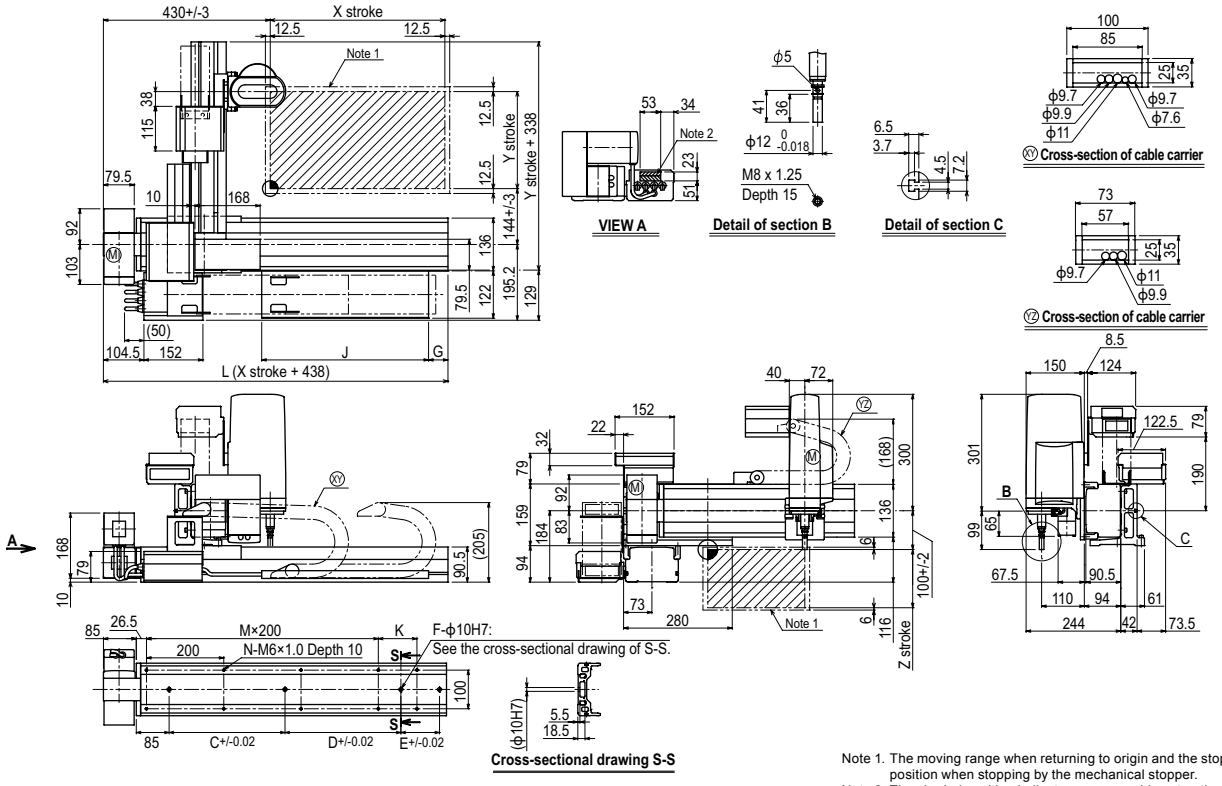

Note 1. The moving range when returning to origin and the stop position when stopping by the mechanical stopper.
Note 2. The shaded position indicates an user cable extraction port.

X stroke	150	250	350	450	550	650	750	850	950	1050	1150	1250	1350	1450	1550	1650	1750	1850	1950	2050	2150	2250	2350	2450	2550	2650	2750	2850	2950	3050
L	588	688	788	888	988	1088	1188	1288	1388	1488	1588	1688	1788	1888	1988	2088	2188	2288	2388	2488	2588	2688	2788	2888	2988	3088	3188	3288	3388	3488
K	200	100	200	100	200	100	200	100	200	100	200	100	200	100	200	100	200	100	200	100	200	100	200	100	200	100	200	100	200	100
C	240	420	600	600	780	780	960	960	1140	1140	1140	1140	1140	1140	1140	1140	1140	1140	1140	1140	1140	1140	1140	1140	1140	1140	1140	1140	1140	1140
D	-	-	-	-	-	-	-	-	-	-	240	240	240	420	600	600	780	780	960	960	1140	1140	1140	1140	1140	1140	1140	1140	1140	1140
E	-	-	-	-	-	-	-	-	-	-	-	-	-	-	-	-	-	-	-	-	-	-	240	240	420	420	600	600	780	960
F	2	2	2	2	2	2	2	2	2	2	3	3	3	3	3	3	3	3	3	3	3	3	4	4	4	4	4	4	4	4
M	1	2	2	3	3	4	4	5	5	6	6	7	7	8	8	9	9	10	10	11	11	12	12	13	13	14	14	15	15	16
N	6	8	8	10	10	12	12	14	14	16	16	18	18	20	20	22	22	24	24	26	26	28	28	30	30	32	32	34	34	36
G	0	50	0	50	0	50	0	50	0	50	0	50	0	50	0	50	0	50	0	50	0	50	0	50	0	50	0	50	0	50
J	330	330	430	430	530	530	630	630	730	730	830	830	930	930	1030	1030	1130	1130	1230	1230	1330	1330	1430	1430	1530	1530	1630	1630	1730	1730

Y stroke	150	250	350	450	550
Z stroke	150				

Controller RCX340 ▶ 636

MEMO

NXY 2 axes

Arm type Cable carrier

Ordering method

NXY - C	-	[ ]	-	[ ]	-	[ ]	-	[ ]	-	RCX320-2	-	[ ]	-	R	-	[ ]	-	[ ]	-	[ ]	-	[ ]
Model	-	Cable	-	Combination	-	X-axis stroke	-	Y-axis stroke	-	Cable	-	Controller / Number of controllable axes	-	Safety standard	-	Regeneratine unit	-	Option A (OP.A)	-	Option B (OP.B)	-	Vision System	-	Absolute battery
				A1 A3		50 to 200cm		15 to 65cm		3L: 3.5m 5L: 5m 10L: 10m														

Specify various controller setting items. RCX320 ▶ P.626

Specification

	X-axis	Y-axis
Axis construction Note 1	N15	F14
AC servo motor output (W)	400	100
Repeatability Note 2 (mm)	+/-0.01	+/-0.01
Drive system	Ball screw ϕ15	Ball screw ϕ15
Ball screw lead Note 3 (Deceleration ratio) (mm)	20	20
Maximum speed (mm/sec)	1200	1200
Moving range (mm)	500 to 2000	150 to 650
Robot cable length (m)	Standard: 3.5 Option: 5,10	

Note 1.Use caution that the flame machining (installation holes, tap holes) differs from single-axis robots'.
Note 2.Positioning repeatability in one direction.
Note 3. Leads not listed in the catalog are also available. Contact us for details.

Maximum payload (kg)

Y stroke (mm)	XY 2 axes
150	25
250	21
350	18
450	16
550	13
650	11

Controller

Controller	Operation method
RCX320-R	Programming / I/O point trace / Remote command / Operation using RS-232C communication

NXY 2 axes A1

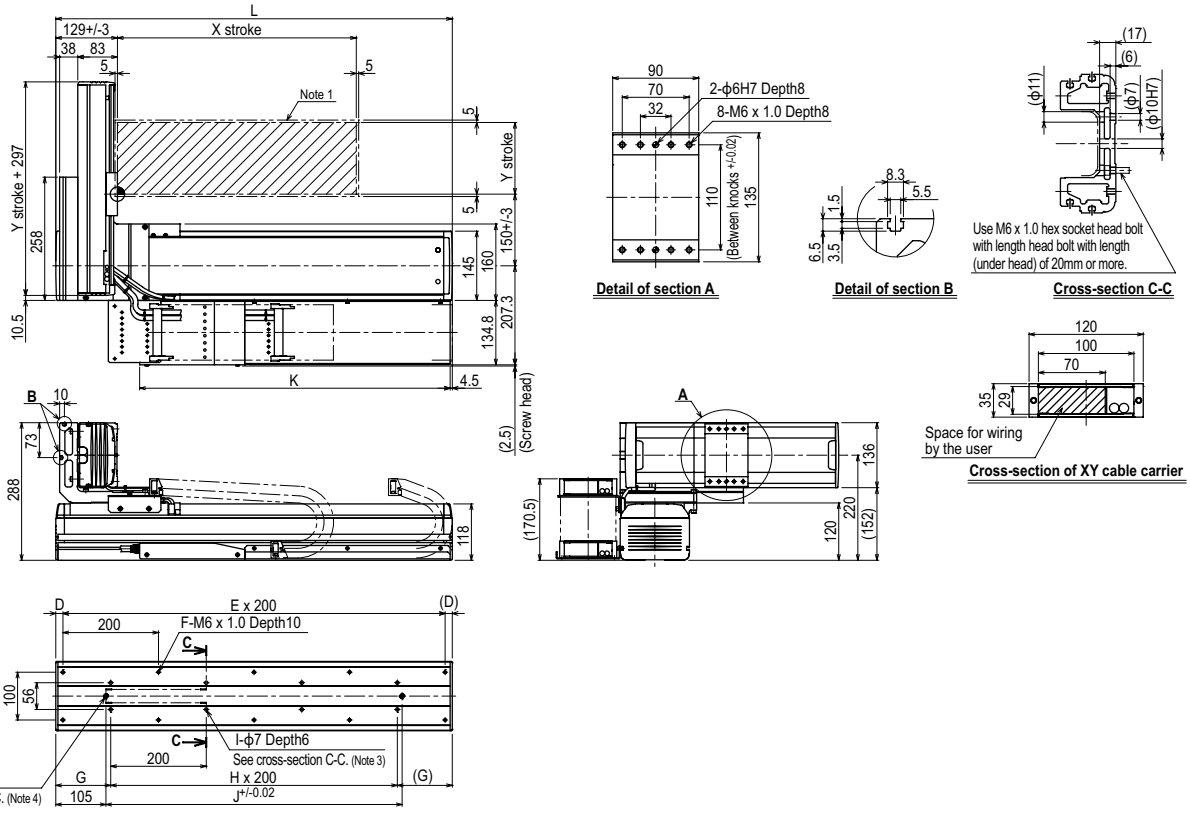

X stroke	500	600	700	800	900	1000	1100	1200	1300	1400	1500	1600	1700	1800	1900	2000
L	830	930	1030	1130	1230	1330	1430	1530	1630	1730	1830	1930	2030	2130	2230	2330
D	15	65	15	65	15	65	15	65	15	65	15	65	15	65	15	65
E	4	4	5	5	6	6	7	7	8	8	9	9	10	10	11	11
F	10	10	12	12	14	14	16	16	18	18	20	20	22	22	24	24
G	115	165	115	165	115	165	115	165	115	165	115	165	115	165	115	165
H	3	3	4	4	5	5	6	6	7	7	8	8	9	9	10	10
I	8	8	10	10	12	12	14	14	16	16	18	18	20	20	22	22
J	620	720	820	920	1020	1120	1220	1320	1420	1520	1620	1720	1820	1920	2020	2120
K	650	700	750	800	850	900	950	1000	1050	1100	1150	1200	1250	1300	1350	1400

Y stroke	150	250	350	450	550	650

Note 1. The moving range when returning to origin and the stop position when stopping by the mechanical stopper.
Note 2. The origin of the X axis is set originally as the drawing and it is possible to change it to the R side origin by changing parameters.
Note 3. When using ϕ7 holes for installation, you must not use a washer, spring washer, etc. in the main unit.
Note 4. When using a ϕ10H7 hole, make sure that the pin does not go into deeper than as shown in the drawing.
Note 5. Use M4 tap of the box next to X axis for the user grounding terminal.
Note 6. The M4 taps at both ends of the cable carriage can be used for fixing cables.

NXY 2 axes A3

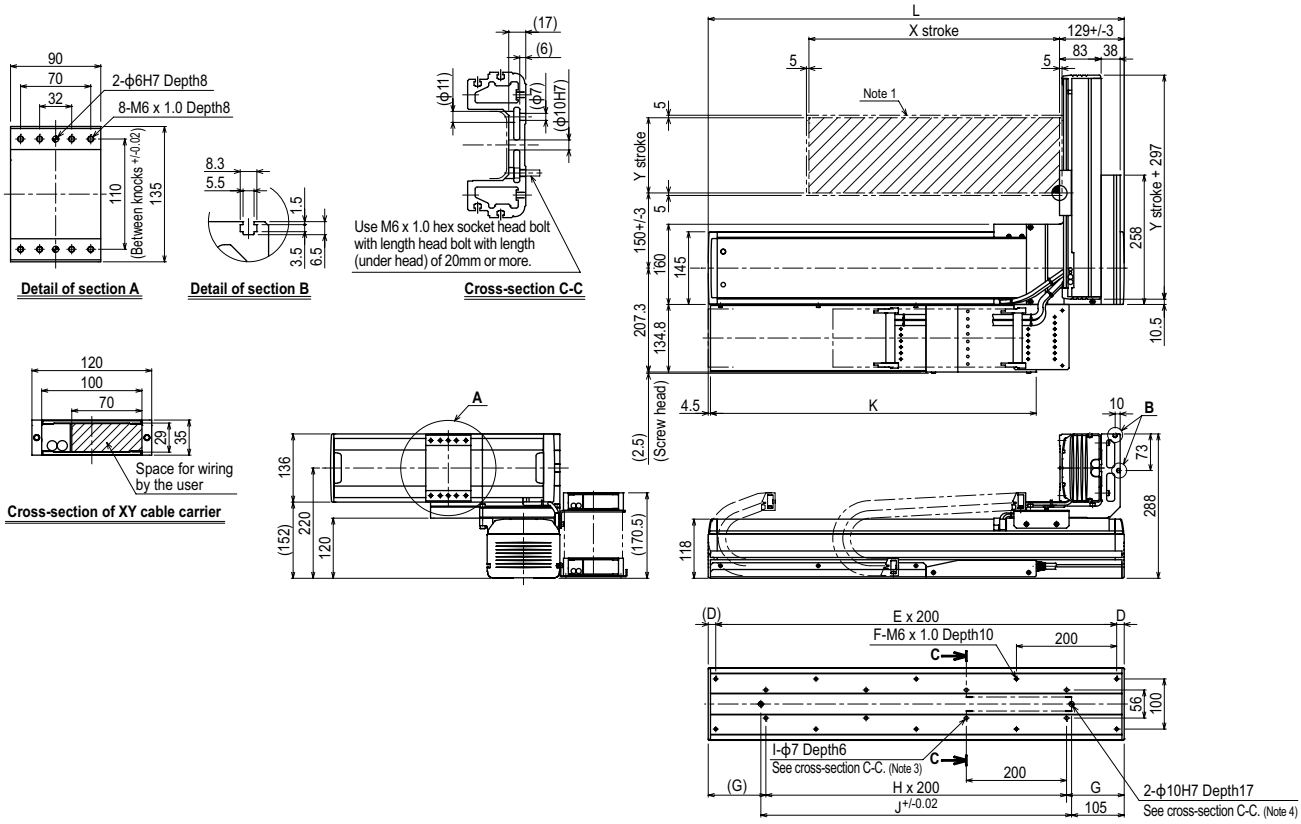

X stroke	500	600	700	800	900	1000	1100	1200	1300	1400	1500	1600	1700	1800	1900	2000
L	830	930	1030	1130	1230	1330	1430	1530	1630	1730	1830	1930	2030	2130	2230	2330
D	15	65	15	65	15	65	15	65	15	65	15	65	15	65	15	65
E	4	4	5	5	6	6	7	7	8	8	9	9	10	10	11	11
F	10	10	12	12	14	14	16	16	18	18	20	20	22	22	24	24
G	115	165	115	165	115	165	115	165	115	165	115	165	115	165	115	165
H	3	3	4	4	5	5	6	6	7	7	8	8	9	9	10	10
I	8	8	10	10	12	12	14	14	16	16	18	18	20	20	22	22
J	620	720	820	920	1020	1120	1220	1320	1420	1520	1620	1720	1820	1920	2020	2120
K	650	700	750	800	850	900	950	1000	1050	1100	1150	1200	1250	1300	1350	1400

Y stroke	150	250	350	450	550	650

Note 1. The moving range when returning to origin and the stop position when stopping by the mechanical stopper.
Note 2. The origin of the X axis is set originally as the drawing and it is possible to change it to the R side origin by changing parameters.
Note 3. When using ϕ7 holes for installation, you must not use a washer, spring washer, etc. in the main unit.
Note 4. When using a ϕ10H7 hole, make sure that the pin does not go into deeper than as shown in the drawing.
Note 5. Use M4 tap of the box next to X axis for the user grounding terminal.
Note 6. The M4 taps at both ends of the cable carriage can be used for fixing cables.

NXY 3 axes / ZFL20

Arm type | Cable carrier | Z-axis: clamped base / moving table type (200W)

Ordering method

NXY - C	-		-		-		- ZFL20 -			-		- RCX340-3 -								
Model	Cable	Combi-nation	X-axis stroke	Y-axis stroke	ZR-axis	Z-axis stroke	Cable	Controller / Number of controllable axes	Safety standard	Option A (OP.A)	Option B (OP.B)	Option C (OP.C)	Option D (OP.D)	Option E (OP.E)	Absolute battery
		A1 A3	50 to 200cm	15 to 65cm		15 to 35cm	3L: 3.5m 5L: 5m 10L: 10m								

Specify various controller setting items. RCX340 ▶ P.636

Specification

	X-axis	Y-axis	Z-axis
Axis construction Note 1	N15	F14	F10H-BK
AC servo motor output (W)	400	100	200
Repeatability Note 2 (mm)	+/-0.01	+/-0.01	+/-0.01
Drive system	Ball screw ϕ15	Ball screw ϕ15	Ball screw ϕ15
Ball screw lead Note 3 (Deceleration ratio) (mm)	20	20	20
Maximum speed (mm/sec)	1200	1200	1200
Moving range (mm)	500 to 2000	150 to 650	150 to 350
Robot cable length (m)	Standard: 3.5 Option: 5,10		

Note 1.Use caution that the flame machining (installation holes, tap holes) differs from single-axis robots'.
Note 2.Positioning repeatability in one direction.
Note 3. Leads not listed in the catalog are also available. Contact us for details.

Maximum payload (kg)

	Z stroke (mm)		
Y stroke (mm)	150	250	350
150	8	8	8
250	8	8	8
350	8	8	8
450	8	7	6
550	5	4	3
650	3	2	1

Controller

Controller	Operation method
RCX340	Programming / I/O point trace / Remote command / Operation using RS-232C communication

NXY 3 axes / ZFL20 A1

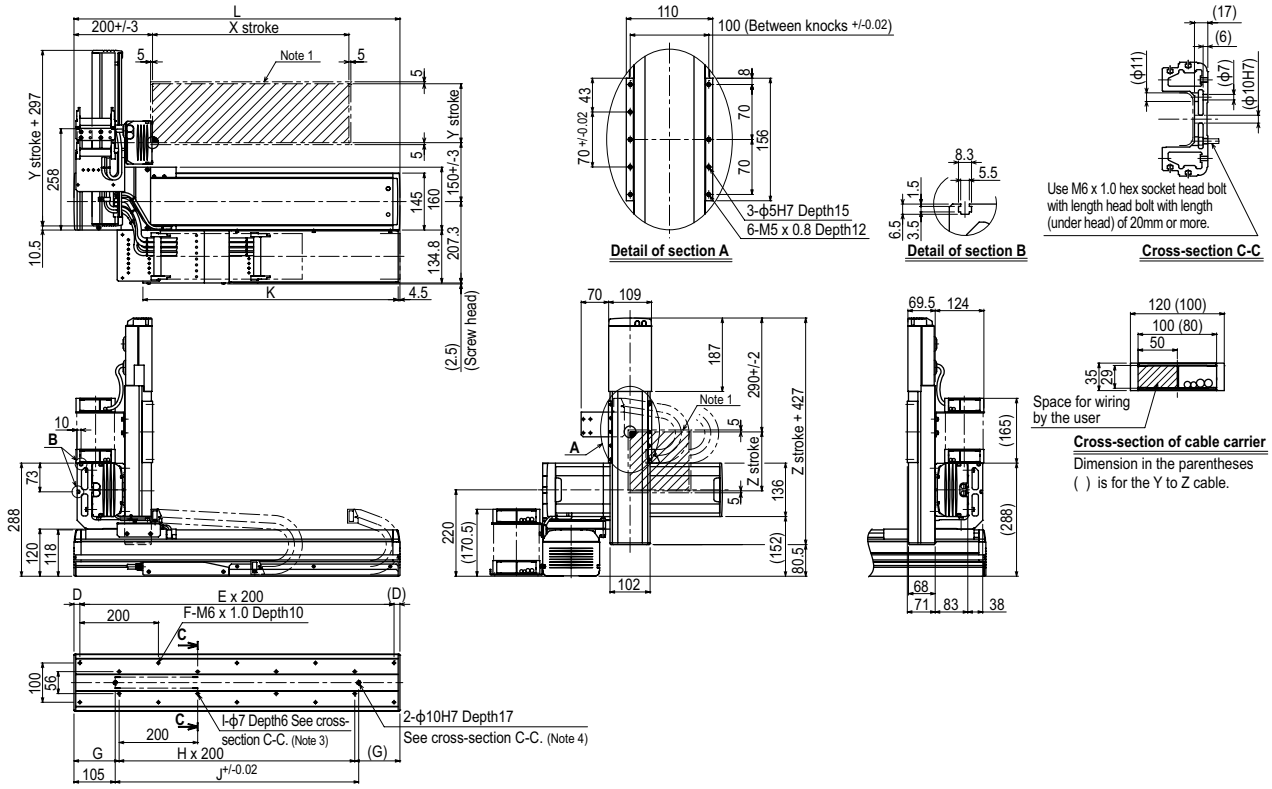

X stroke	500	600	700	800	900	1000	1100	1200	1300	1400	1500	1600	1700	1800	1900	2000
L	830	930	1030	1130	1230	1330	1430	1530	1630	1730	1830	1930	2030	2130	2230	2330
D	15	65	15	65	15	65	15	65	15	65	15	65	15	65	15	65
E	4	4	5	5	6	6	7	7	8	8	9	9	10	10	11	11
F	10	10	12	12	14	14	16	16	18	18	20	20	22	22	24	24
G	115	165	115	165	115	165	115	165	115	165	115	165	115	165	115	165
H	3	3	4	4	5	5	6	6	7	7	8	8	9	9	10	10
I	8	8	10	10	12	12	14	14	16	16	18	18	20	20	22	22
J	620	720	820	920	1020	1120	1220	1320	1420	1520	1620	1720	1820	1920	2020	2120
K	650	700	750	800	850	900	950	1000	1050	1100	1150	1200	1250	1300	1350	1400

Y stroke	150	250	350	450	550	650
Z stroke	150	250	350			

Note 1. The moving range when returning to origin and the stop position when stopping by the mechanical stopper.
Note 2. The origin of the X axis is set originally as the drawing and it is possible to change it to the R side origin by changing parameters.
Note 3. When using ϕ7 holes for installation, you must not use a washer, spring washer, etc. in the main unit.
Note 4. When using a ϕ10H7 hole, make sure that the pin does not go into deeper than as shown in the drawing.
Note 5. Use M4 tap of the box next to X axis for the user grounding terminal.
Note 6. The M4 taps at both ends of the cable carriage can be used for fixing cables.

Controller RCX340 ▶ 636

NXY 3 axes / ZFL20 A3

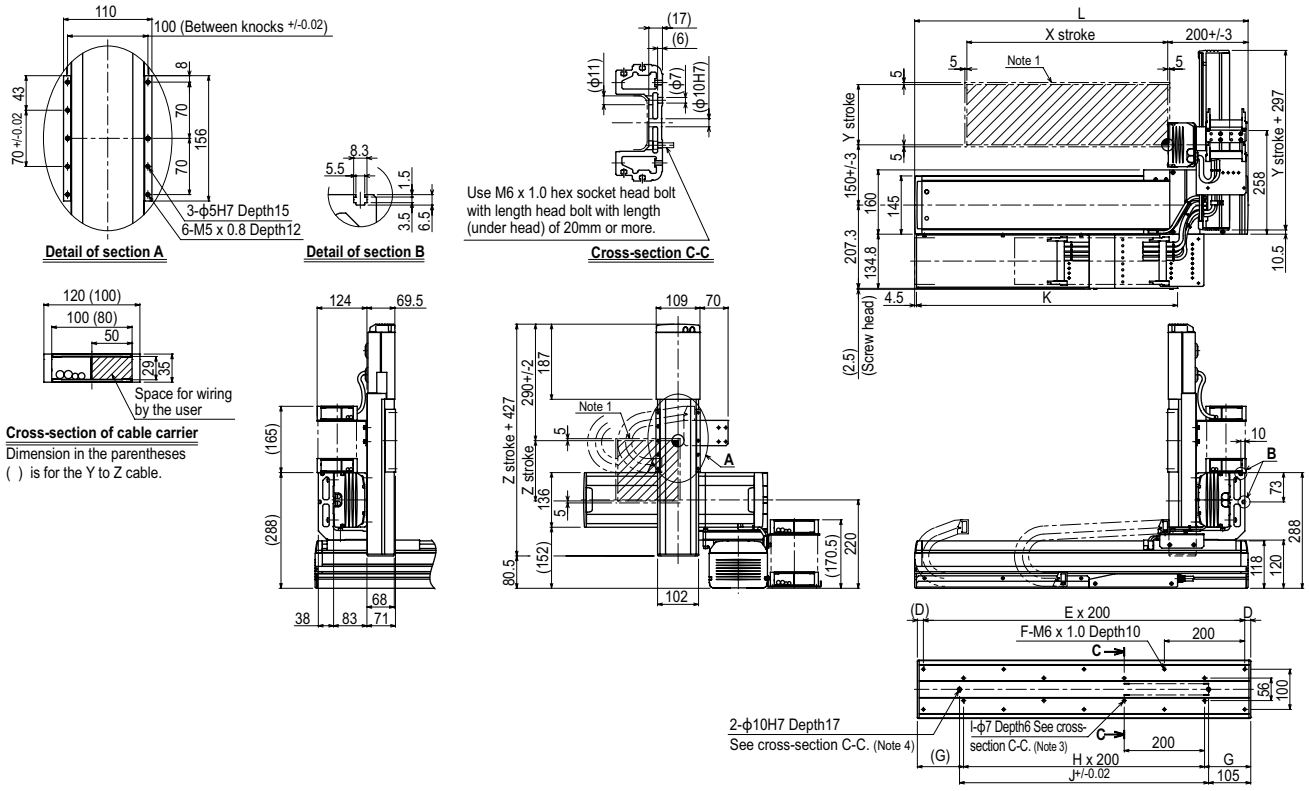

X stroke	500	600	700	800	900	1000	1100	1200	1300	1400	1500	1600	1700	1800	1900	2000
L	830	930	1030	1130	1230	1330	1430	1530	1630	1730	1830	1930	2030	2130	2230	2330
D	15	65	15	65	15	65	15	65	15	65	15	65	15	65	15	65
E	4	4	5	5	6	6	7	7	8	8	9	9	10	10	11	11
F	10	10	12	12	14	14	16	16	18	18	20	20	22	22	24	24
G	115	165	115	165	115	165	115	165	115	165	115	165	115	165	115	165
H	3	3	4	4	5	5	6	6	7	7	8	8	9	9	10	10
I	8	8	10	10	12	12	14	14	16	16	18	18	20	20	22	22
J	620	720	820	920	1020	1120	1220	1320	1420	1520	1620	1720	1820	1920	2020	2120
K	650	700	750	800	850	900	950	1000	1050	1100	1150	1200	1250	1300	1350	1400

Y stroke	150	250	350	450	550	650

Z stroke	150	250	350

Note 1. The moving range when returning to origin and the stop position when stopping by the mechanical stopper.
Note 2. The origin of the X axis is set originally as the drawing and it is possible to change it to the R side origin by changing parameters.
Note 3. When using ϕ7 holes for installation, you must not use a washer, spring washer, etc. in the main unit.
Note 4. When using a ϕ10H7 hole, make sure that the pin does not go into deeper than as shown in the drawing.
Note 5. Use M4 tap of the box next to X axis for the user grounding terminal.
Note 6. The M4 taps at both ends of the cable carriage can be used for fixing cables.

NXY 3 axes / ZFH

Arm type | Cable carrier | Z-axis clamped table: moving base type (200W)

Ordering method

NXY - C	-	-	-	- ZFH	-	-	- RCX340-3	-	-	-	-	-	-	-
Model	Cable	Combination	X-axis stroke	Y-axis stroke	ZR-axis	Z-axis stroke	Cable	Controller / Number of controllable axes	Safety standard	Option A (OP.A)	Option B (OP.B)	Option C (OP.C)	Option D (OP.D)	Option E (OP.E)	Absolute battery
		A1 A3	50 to 200cm	15 to 65cm		15 to 35cm	3L: 3.5m 5L: 5m 10L: 10m								

Specify various controller setting items. RCX340 ▶ P.636

Specification

	X-axis	Y-axis	Z-axis
Axis construction Note 1	N15	F14	F10H-BK
AC servo motor output (W)	400	100	200
Repeatability Note 2 (mm)	+/-0.01	+/-0.01	+/-0.01
Drive system	Ball screw ϕ15	Ball screw ϕ15	Ball screw ϕ15
Ball screw lead Note 3 (Deceleration ratio) (mm)	20	20	10
Maximum speed (mm/sec)	1200	1200	600
Moving range (mm)	500 to 2000	150 to 650	150 to 350
Robot cable length (m)	Standard: 3.5 Option: 5,10		

Note 1. Use caution that the flame machining (installation holes, tap holes) differs from single-axis robots'.
Note 2. Positioning repeatability in one direction.
Note 3. Leads not listed in the catalog are also available. Contact us for details.

Maximum payload (kg)

	Z stroke (mm)		
Y stroke (mm)	150	250	350
150	13	13	12
250	12	11	10
350	10	9	8
450	8	7	6
550	5	4	3
650	3	2	1

Controller

Controller	Operation method
RCX340	Programming / I/O point trace / Remote command / Operation using RS-232C communication

NXY 3 axes / ZFH A1

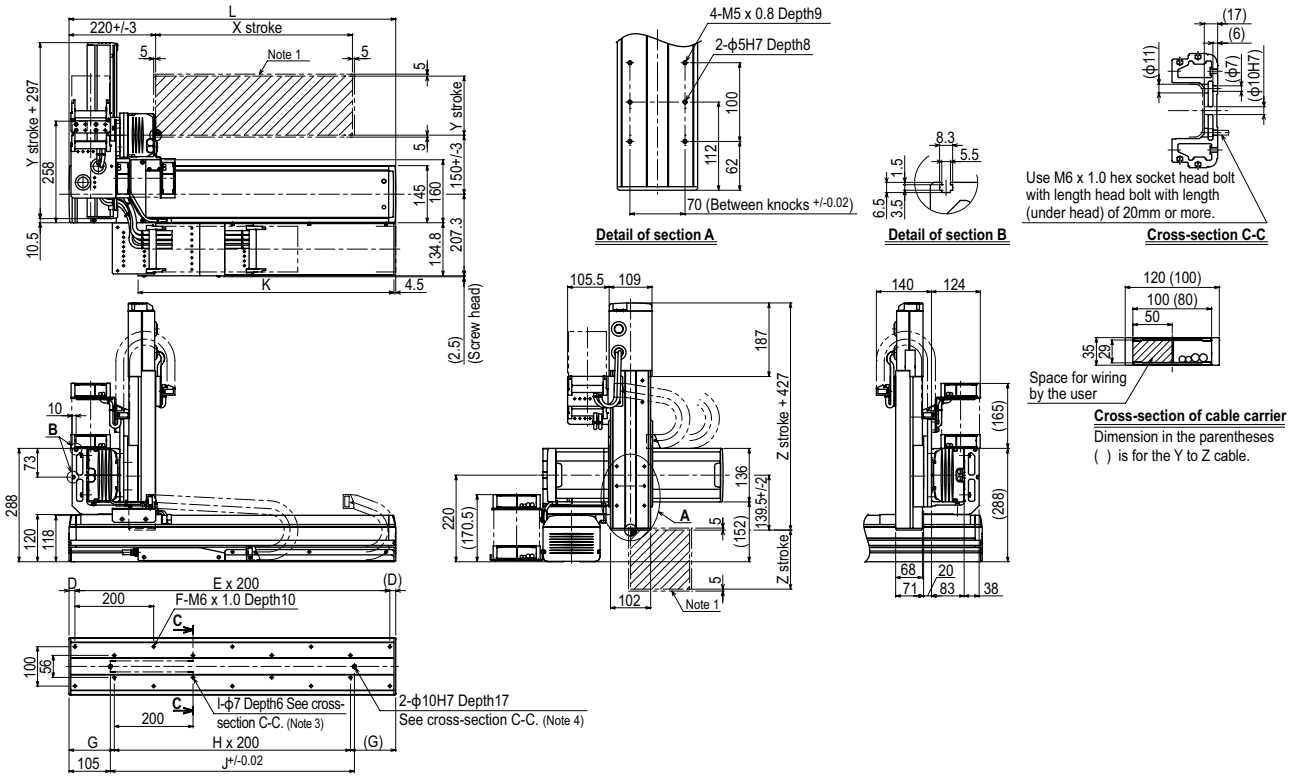

X stroke	500	600	700	800	900	1000	1100	1200	1300	1400	1500	1600	1700	1800	1900	2000
L	830	930	1030	1130	1230	1330	1430	1530	1630	1730	1830	1930	2030	2130	2230	2330
D	15	65	15	65	15	65	15	65	15	65	15	65	15	65	15	65
E	4	4	5	5	6	6	7	7	8	8	9	9	10	10	11	11
F	10	10	12	12	14	14	16	16	18	18	20	20	22	22	24	24
G	115	165	115	165	115	165	115	165	115	165	115	165	115	165	115	165
H	3	3	4	4	5	5	6	6	7	7	8	8	9	9	10	10
I	8	8	10	10	12	12	14	14	16	16	18	18	20	20	22	22
J	620	720	820	920	1020	1120	1220	1320	1420	1520	1620	1720	1820	1920	2020	2120
K	650	700	750	800	850	900	950	1000	1050	1100	1150	1200	1250	1300	1350	1400

Y stroke	150	250	350	450	550	650
Z stroke	150	250	350			

Note 1. The moving range when returning to origin and the stop position when stopping by the mechanical stopper.
Note 2. The origin of the X axis is set originally as the drawing and it is possible to change it to the R side origin by changing parameters.
Note 3. When using ϕ7 holes for installation, you must not use a washer, spring washer, etc. in the main unit.
Note 4. When using a ϕ10H7 hole, make sure that the pin does not go into deeper than as shown in the drawing.
Note 5. Use M4 tap of the box next to X axis for the user grounding terminal.
Note 6. The M4 taps at both ends of the cable carriage can be used for fixing cables.

Controller RCX340 ▶ 636

NXY 3 axes / ZFH A3

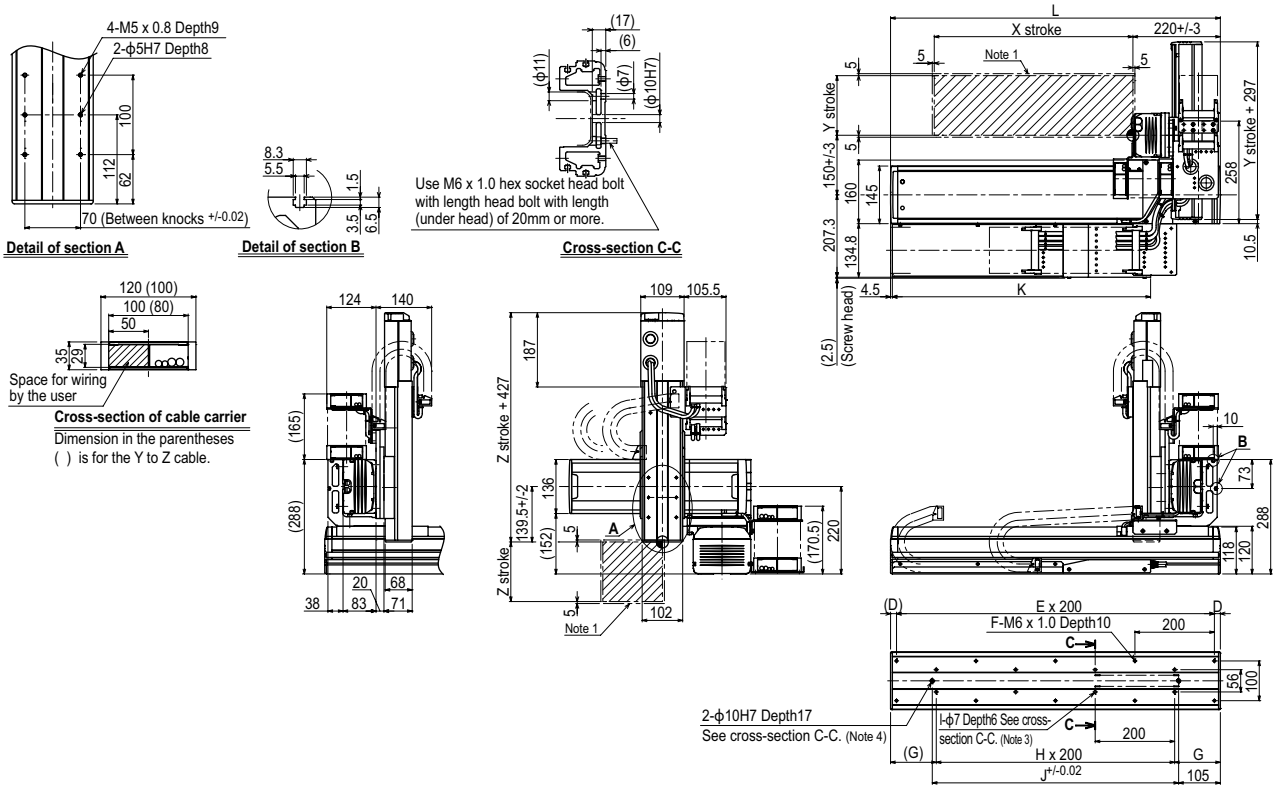

X stroke	500	600	700	800	900	1000	1100	1200	1300	1400	1500	1600	1700	1800	1900	2000
L	830	930	1030	1130	1230	1330	1430	1530	1630	1730	1830	1930	2030	2130	2230	2330
D	15	65	15	65	15	65	15	65	15	65	15	65	15	65	15	65
E	4	4	5	5	6	6	7	7	8	8	9	9	10	10	11	11
F	10	10	12	12	14	14	16	16	18	18	20	20	22	22	24	24
G	115	165	115	165	115	165	115	165	115	165	115	165	115	165	115	165
H	3	3	4	4	5	5	6	6	7	7	8	8	9	9	10	10
I	8	8	10	10	12	12	14	14	16	16	18	18	20	20	22	22
J	620	720	820	920	1020	1120	1220	1320	1420	1520	1620	1720	1820	1920	2020	2120
K	650	700	750	800	850	900	950	1000	1050	1100	1150	1200	1250	1300	1350	1400

Y stroke	150	250	350	450	550	650

Z stroke	150	250	350

Note 1. The moving range when returning to origin and the stop position when stopping by the mechanical stopper.
Note 2. The origin of the X axis is set originally as the drawing and it is possible to change it to the R side origin by changing parameters.
Note 3. When using ϕ7 holes for installation, you must not use a washer, spring washer, etc. in the main unit.
Note 4. When using a ϕ10H7 hole, make sure that the pin does not go into deeper than as shown in the drawing.
Note 5. Use M4 tap of the box next to X axis for the user grounding terminal.
Note 6. The M4 taps at both ends of the cable carriage can be used for fixing cables.

NXY-W 4 axes

Arm type | Cable carrier | Double Y axes specifications

Ordering method

NXY	- C	- WA1	- [ ]	- [ ]	- [ ]	- RCX340-4	- [ ]	- [ ]	- [ ]	- [ ]	- [ ]	- [ ]	- [ ]
Model	Cable	Combination	X-axis stroke	Y-axis stroke	Cable	Controller / Number of controllable axes	Safety standard	Option A (OP.A)	Option B (OP.B)	Option C (OP.C)	Option D (OP.D)	Option E (OP.E)	Absolute battery
			25 to 175cm	15 to 65cm Note 1	3L: 3.5m 5L: 5m 10L: 10m								

Specify various controller setting items. RCX340 ▶ P636

Note 1. When the Y-axis stroke is different between the right and left, it will be an order-made.

Specification

	X-axis	Y-axis Note 1
Axis construction Note 2	N15D	F14
AC servo motor output (W)	400	100
Repeatability Note 3 (mm)	+/-0.01	+/-0.01
Drive system	Ball screw ϕ15	Ball screw ϕ15
Ball screw lead Note 4 (Deceleration ratio) (mm)	20	20
Maximum speed (mm/sec)	1200	1200
Moving range (mm)	250 to 1750	150 to 650
Robot cable length (m)	Standard: 3.5 Option: 5,10	

Note 1. The same two Y axes are installed and they have same specifications. If axes of individually different stroke are desired, it will be an order-made. In that case, consult YAMAHA.
Note 2. Use caution that the flame machining (installation holes, tap holes) differs from single-axis robots'.
Note 3. Positioning repeatability in one direction.
Note 4. Leads not listed in the catalog are also available. Contact us for details.

Maximum payload (kg)

Y stroke (mm)	XY 2 axes
150	25
250	21
350	18
450	16
550	13
650	11

Controller

Controller	Operation method
RCX340	Programming / I/O point trace / Remote command / Operation using RS-232C communication

NXY-W 4 axes WA1

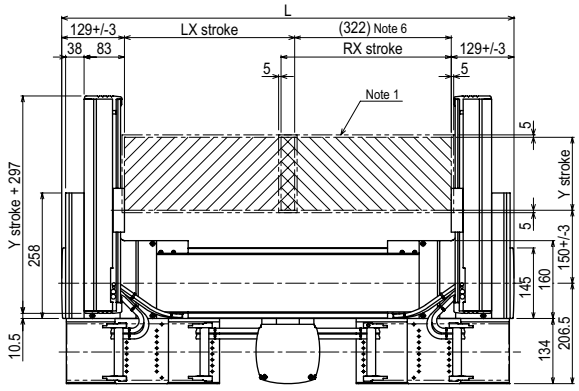

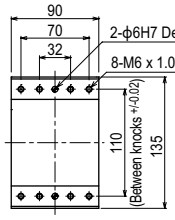

Detail of section A

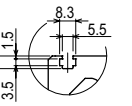

Detail of section B

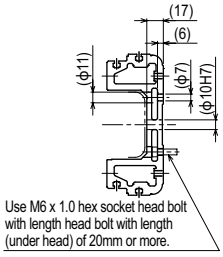

Cross-section C-C

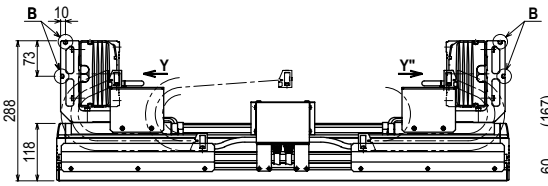

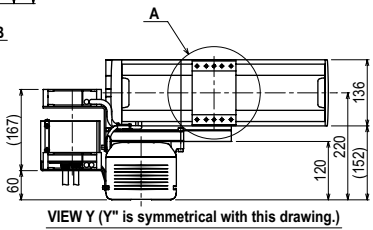

VIEW Y (Y" is symmetrical with this drawing.)

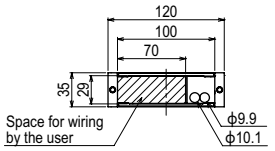

Cross-section of XY cable carrier

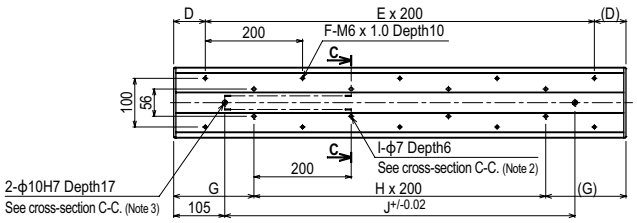

X stroke	250	350	450	550	650	750	850	950	1050	1150	1250	1350	1450	1550	1650	1750
L	830	930	1030	1130	1230	1330	1430	1530	1630	1730	1830	1930	2030	2130	2230	2330
D	15	65	15	65	15	65	15	65	15	65	15	65	15	65	15	65
E	4	4	5	5	6	6	7	7	8	8	9	9	10	10	11	11
F	10	10	12	12	14	14	16	16	18	18	20	20	22	22	24	24
G	115	165	115	165	115	165	115	165	115	165	115	165	115	165	115	165
H	3	3	4	4	5	5	6	6	7	7	8	8	9	9	10	10
I	8	8	10	10	12	12	14	14	16	16	18	18	20	20	22	22
J	620	720	820	920	1020	1120	1220	1320	1420	1520	1620	1720	1820	1920	2020	2120

Y stroke	150	250	350	450	550	650

Note 1. The moving range when returning to origin and the stop position when stopping by the mechanical stopper.
Note 2. When using ϕ7 holes for installation, you must not use a washer, spring washer, etc. in the main unit.
Note 3. When using a ϕ10H7 hole, make sure that the pin does not go into deeper than as shown in the drawing.
Note 4. Use M4 tap of the box next to X axis for the user grounding terminal.
Note 5. The M4 taps at both ends of the cable carriage can be used for fixing cables.
Note 6. Minimum dimension between LX and RX sliders.

Controller RCX340 ▶ 636

NXY-W

6 axes / ZFL

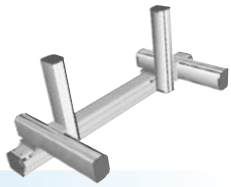

- Arm type
- Cable carrier
- Double Y axes specifications
- Z-axis: clamped base / moving table type (200W)

Ordering method

NXY - C - WA1 - □ - □ - ZFL20 - □ - □ - RCX340-4 - □ - □ - □ - □ - □ - □ - □

Model	Cable	Combination	X-axis stroke	Y-axis stroke	ZR-axis	Z-axis stroke	Cable	Controller / Number of controllable axes	Safety standard	Option A (OP.A)	Option B (OP.B)	Option C (OP.C)	Option D (OP.D)	Option E (OP.E)	Absolute battery
			25 to 175cm	15 to 65cm Note 1		15 to 35cm	3L: 3.5m 5L: 5m 10L: 10m								

Specify various controller setting items. RCX340 ▶ P.636

Note 1. When either one or both of Y-axis or Z-axis stroke is different, it will be an order-made.

Specification

	X-axis	Y-axis Note 1	Z-axis
Axis construction Note 2	N15D	F14	F10H-BK
AC servo motor output (W)	400	100	200
Repeatability Note 3 (mm)	+/-0.01	+/-0.01	+/-0.01
Drive system	Ball screw ϕ15	Ball screw ϕ15	Ball screw ϕ15
Ball screw lead Note 4 (Deceleration ratio) (mm)	20	20	20
Maximum speed (mm/sec)	1200	1200	1200
Moving range (mm)	250 to 1750	150 to 650	150 to 350
Robot cable length (m)	Standard: 3.5 Option: 5,10		

Note 1.The same two Y axes are installed and they have same specifications. If axes of individually different stroke are desired, it will be an order-made. In that case, consult YAMAHA.
Note 2.Use caution that the flame machining (installation holes, tap holes) differs from single-axis robots'.
Note 3.Positioning repeatability in one direction.
Note 4. Leads not listed in the catalog are also available. Contact us for details.

Maximum payload (kg)

	Z stroke (mm)		
Y stroke (mm)	150	250	350
150	8	8	8
250	8	8	8
350	8	8	8
450	8	7	6
550	5	4	3
650	3	2	1

Controller

Controller	Operation method
RCX340	Programming / I/O point trace / Remote command / Operation using RS-232C communication

NXY-W 6 axes / ZFL WA1

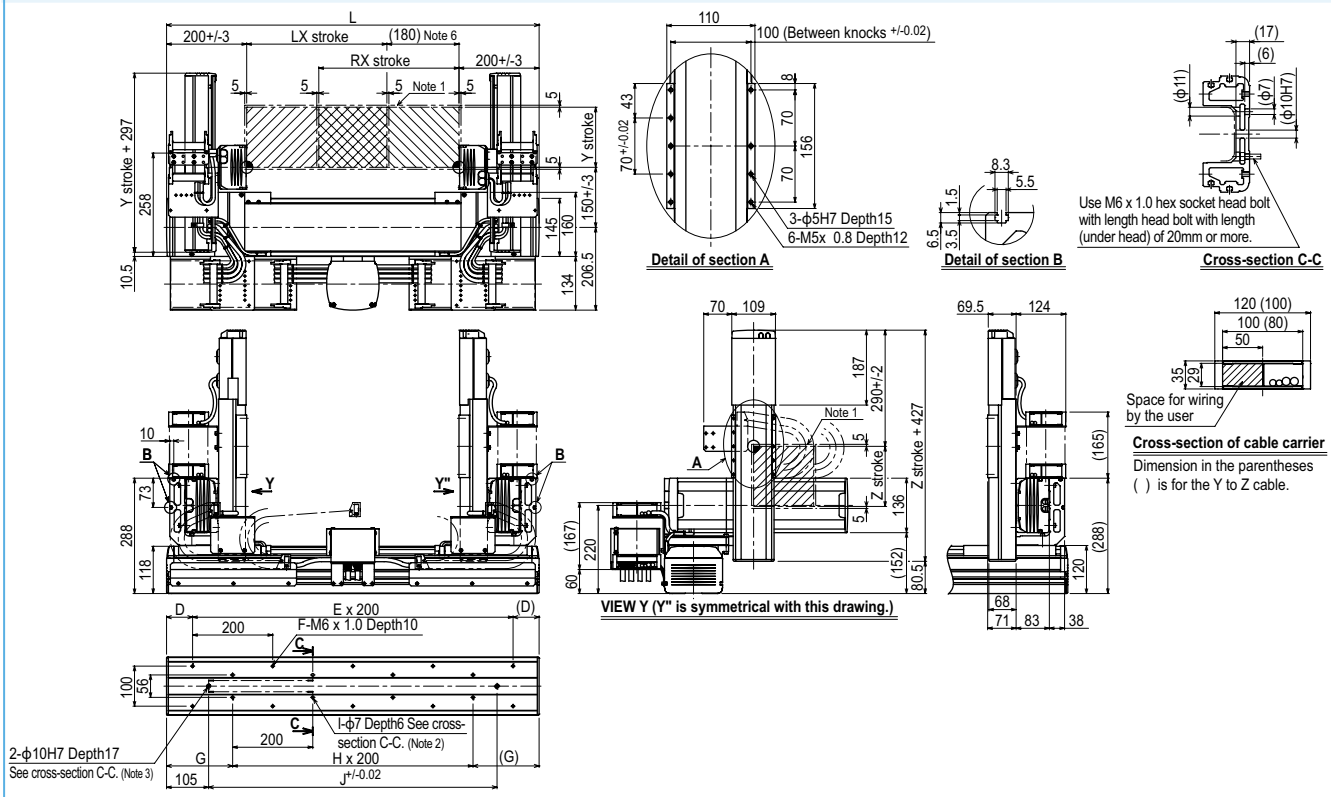

X stroke	250	350	450	550	650	750	850	950	1050	1150	1250	1350	1450	1550	1650	1750
L	830	930	1030	1130	1230	1330	1430	1530	1630	1730	1830	1930	2030	2130	2230	2330
D	15	65	15	65	15	65	15	65	15	65	15	65	15	65	15	65
E	4	4	5	5	6	6	7	7	8	8	9	9	10	10	11	11
F	10	10	12	12	14	14	16	16	18	18	20	20	22	22	24	24
G	115	165	115	165	115	165	115	165	115	165	115	165	115	165	115	165
H	3	3	4	4	5	5	6	6	7	7	8	8	9	9	10	10
I	8	8	10	10	12	12	14	14	16	16	18	18	20	20	22	22
J	620	720	820	920	1020	1120	1220	1320	1420	1520	1620	1720	1820	1920	2020	2120

Y stroke	150	250	350	450	550	650

Z stroke	150	250	350

Note 1. The moving range when returning to origin and the stop position when stopping by the mechanical stopper.
Note 2. When using ϕ7 holes for installation, you must not use a washer, spring washer, etc. in the main unit.
Note 3. When using a ϕ10H7 hole, make sure that the pin does not go into deeper than as shown in the drawing.
Note 4. Use M4 tap of the box next to X axis for the user grounding terminal.
Note 5. The M4 taps at both ends of the cable carriage can be used for fixing cables.
Note 6. Minimum dimension between LX and RX sliders.

NXY-W 6 axes / ZFH

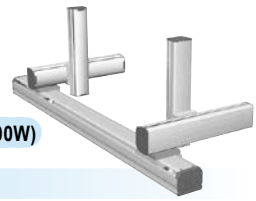

Arm type | Cable carrier | Double Y axes specifications | Z-axis: clamped table / moving base type (200W)

Ordering method

NXY	C	WA1			ZFH			RCX340-4							
Model	Cable	Combination	X-axis stroke (25 to 175cm)	Y-axis stroke (15 to 65cm Note 1)	ZR-axis	Z-axis stroke (15 to 35cm)	Cable (3L: 3.5m, 5L: 5m, 10L: 10m)	Controller / Number of controllable axes	Safety standard	Option A (OP.A)	Option B (OP.B)	Option C (OP.C)	Option D (OP.D)	Option E (OP.E)	Absolute battery

Specify various controller setting items. RCX340 ▶ P.636

Note 1. When either one or both of Y-axis or Z-axis stroke is different, it will be an order-made.

Specification

	X-axis	Y-axis Note 1	Z-axis
Axis construction Note 2	N15D	F14	F10H-BK
AC servo motor output (W)	400	100	200
Repeatability Note 3 (mm)	+/-0.01	+/-0.01	+/-0.01
Drive system	Ball screw ϕ15	Ball screw ϕ15	Ball screw ϕ15
Ball screw lead Note 4 (Deceleration ratio) (mm)	20	20	10
Maximum speed (mm/sec)	1200	1200	600
Moving range (mm)	250 to 1750	150 to 650	150 to 350
Robot cable length (m)	Standard: 3.5 Option: 5,10		

Note 1. The same two Y axes are installed and they have same specifications. If axes of individually different stroke are desired, it will be an order-made. In that case, consult YAMAHA.
Note 2. Use caution that the flame machining (installation holes, tap holes) differs from single-axis robots'.
Note 3. Positioning repeatability in one direction.
Note 4. Leads not listed in the catalog are also available. Contact us for details.

Maximum payload (kg)

	Z stroke (mm)		
Y stroke (mm)	150	250	350
150	13	13	12
250	12	11	10
350	10	9	8
450	8	7	6
550	5	4	3
650	3	2	1

Controller

Controller	Operation method
RCX340	Programming / I/O point trace / Remote command / Operation using RS-232C communication

NXY-W 6 axes / ZFH WA1

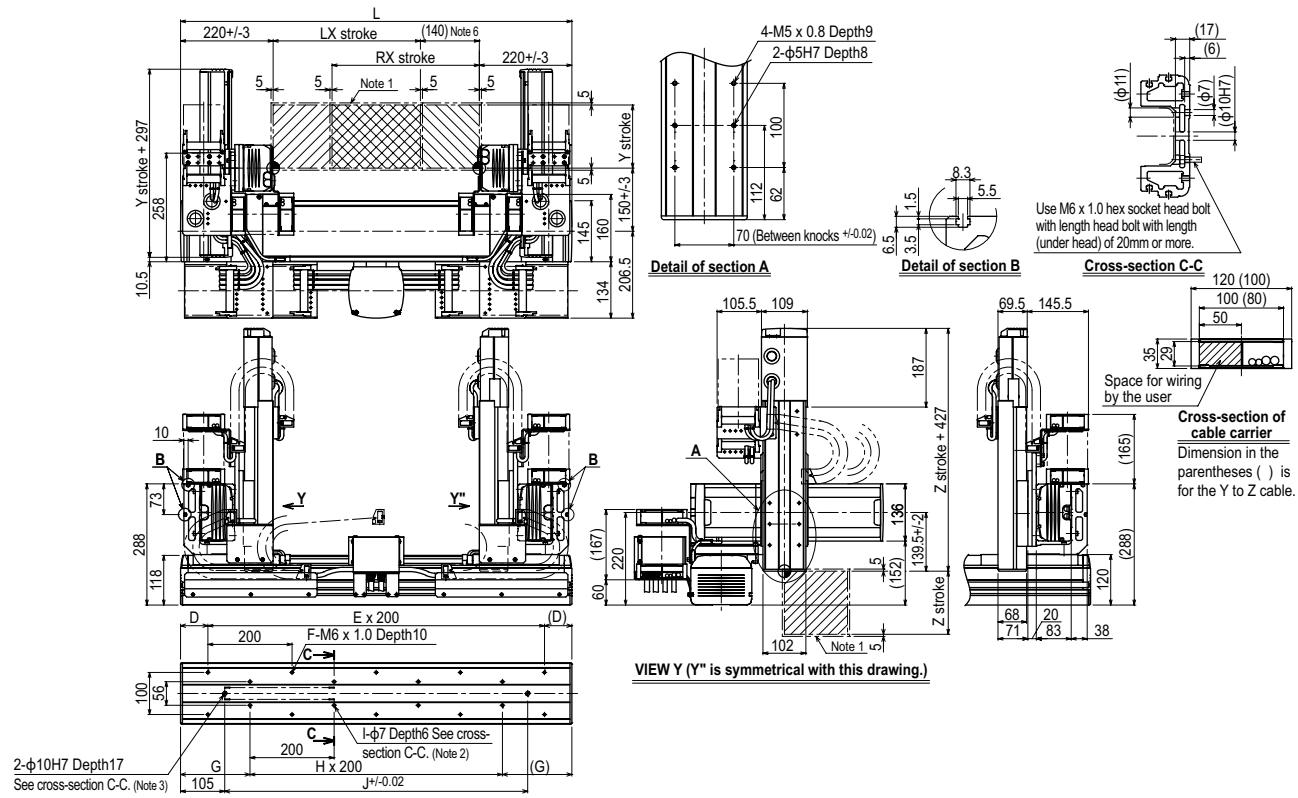

X stroke	250	350	450	550	650	750	850	950	1050	1150	1250	1350	1450	1550	1650	1750
L	830	930	1030	1130	1230	1330	1430	1530	1630	1730	1830	1930	2030	2130	2230	2330
D	15	65	15	65	15	65	15	65	15	65	15	65	15	65	15	65
E	4	4	5	5	6	6	7	7	8	8	9	9	10	10	11	11
F	10	10	12	12	14	14	16	16	18	18	20	20	22	22	24	24
G	115	165	115	165	115	165	115	165	115	165	115	165	115	165	115	165
H	3	3	4	4	5	5	6	6	7	7	8	8	9	9	10	10
I	8	8	10	10	12	12	14	14	16	16	18	18	20	20	22	22
J	620	720	820	920	1020	1120	1220	1320	1420	1520	1620	1720	1820	1920	2020	2120

Y stroke	150	250	350	450	550	650
Z stroke	150	250	350			

Note 1. The moving range when returning to origin and the stop position when stopping by the mechanical stopper.
Note 2. When using ϕ7 holes for installation, you must not use a washer, spring washer, etc. in the main unit.
Note 3. When using a ϕ10H7 hole, make sure that the pin does not go into deeper than as shown in the drawing.
Note 4. Use M4 tap of the box next to X axis for the user grounding terminal.
Note 5. The M4 taps at both ends of the cable carriage can be used for fixing cables.
Note 6. Minimum dimension between LX and RX sliders.

Controller RCX340 ▶ 636

MEMO

MXYx 2 axes

Arm type | Cable carrier

Ordering method

MXYx -	C	-	[ ]	-	[ ]	-	[ ]	-	RCX320-2	-	[ ]	-	R	-	[ ]	-	[ ]	-	[ ]	-	[ ]
Model	Cable	Combination		X-axis stroke		Y-axis stroke		Cable	Controller / Number of controllable axes	Safety standard		Regenerative unit		Option A (OP.A)		Option B (OP.B)		Vision System		Absolute battery

Combination: A1, A2, A3, A4
X-axis stroke: 25 to 125cm
Y-axis stroke: 15 to 65cm
Cable: 3L: 3.5m, 5L: 5m, 10L: 10m

Specify various controller setting items. RCX320 ▶ P.626

Specification

	X-axis	Y-axis
Axis construction Note 1	F17	F14H
AC servo motor output (W)	400	200
Repeatability Note 2 (mm)	+/-0.01	+/-0.01
Drive system	Ball screw ϕ20	Ball screw ϕ15
Ball screw lead Note 3 (Deceleration ratio) (mm)	20	20
Maximum speed Note 4 (mm/sec)	1200	1200
Moving range (mm)	250 to 1250	150 to 650
Robot cable length (m)	Standard: 3.5 Option: 5,10	

Note 1.Use caution that the flame machining (installation holes, tap holes) differs from single-axis robots'.
Note 2.Positioning repeatability in one direction.
Note 3. Leads not listed in the catalog are also available. Contact us for details.
Note 4.When the X-axis stroke is longer than 850mm, resonance of the ball screw may occur depending on the operation conditions (critical speed). In this case, reduce the speed setting on the program by referring to the maximum speeds shown in the table below.

Maximum payload (kg)

Y stroke (mm)	XY 2 axes
150	30
250	30
350	25
450	20
550	20
650	16

Controller

Controller	Operation method
RCX320-R	Programming / I/O point trace / Remote command / Operation using RS-232C communication

MXYx 2 axes A1

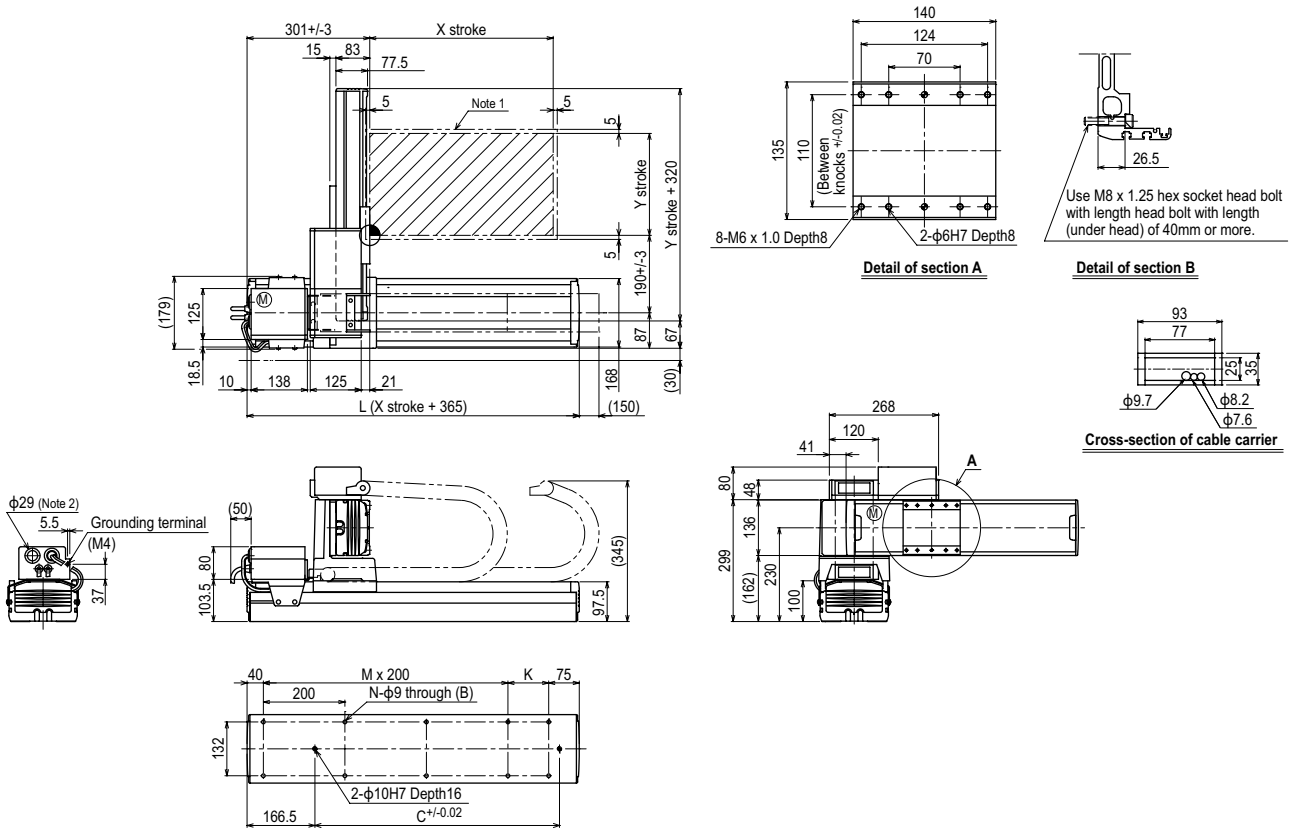

X stroke	250	350	450	550	650	750	850	950	1050	1150	1250
L	615	715	815	915	1015	1115	1215	1315	1415	1515	1615
K	100	200	100	200	100	200	100	200	100	200	100
C	240	420	600	600	780	780	960	960	1140	1140	1320
M	2	2	3	3	4	4	5	5	6	6	7
N	8	8	10	10	12	12	14	14	16	16	18

Y stroke	150	250	350	450	550	650
Maximum speed for each stroke (mm/sec) Note 3 — X-axis	1200					
Maximum speed for each stroke (mm/sec) Note 3 — Speed setting	–			960	840	720	600	480
				80%	70%	60%	50%	40%

Note 1. The moving range when returning to origin and the stop position when stopping by the mechanical stopper.
Note 2. User cable extraction port.

Note 3. When the X-axis stroke is longer than 850mm, resonance of the ball screw may occur depending on the operation conditions (critical speed). In this case, reduce the speed setting on the program by referring to the maximum speeds shown in the table at the left.

MXYx 2 axes A2

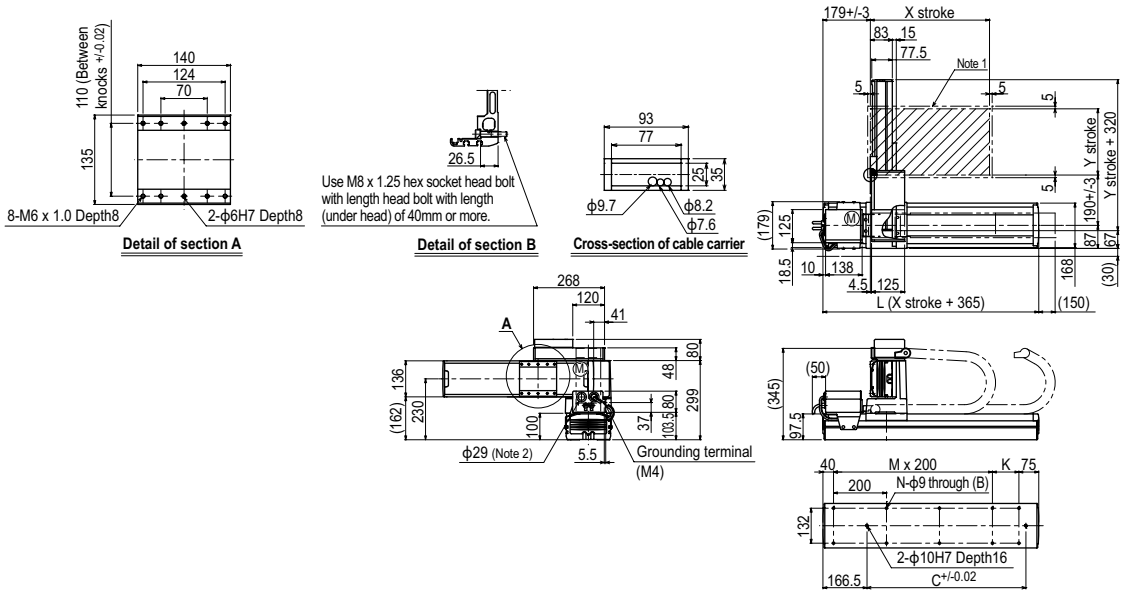

MXYx 2 axes A3

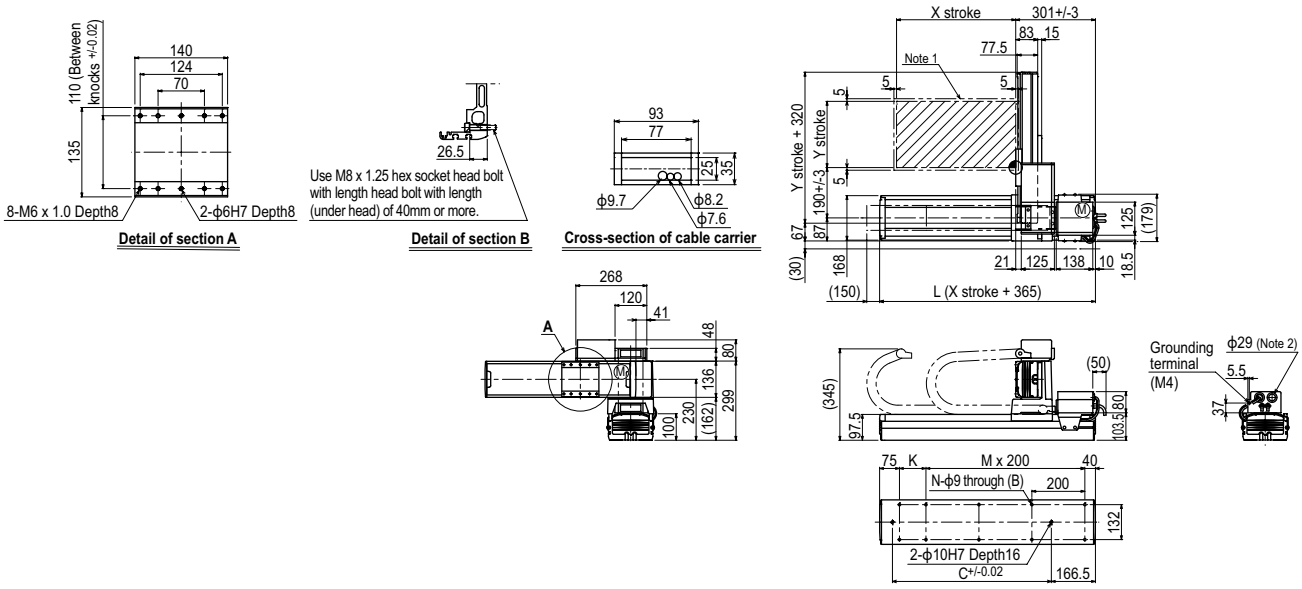

MXYx 2 axes A4

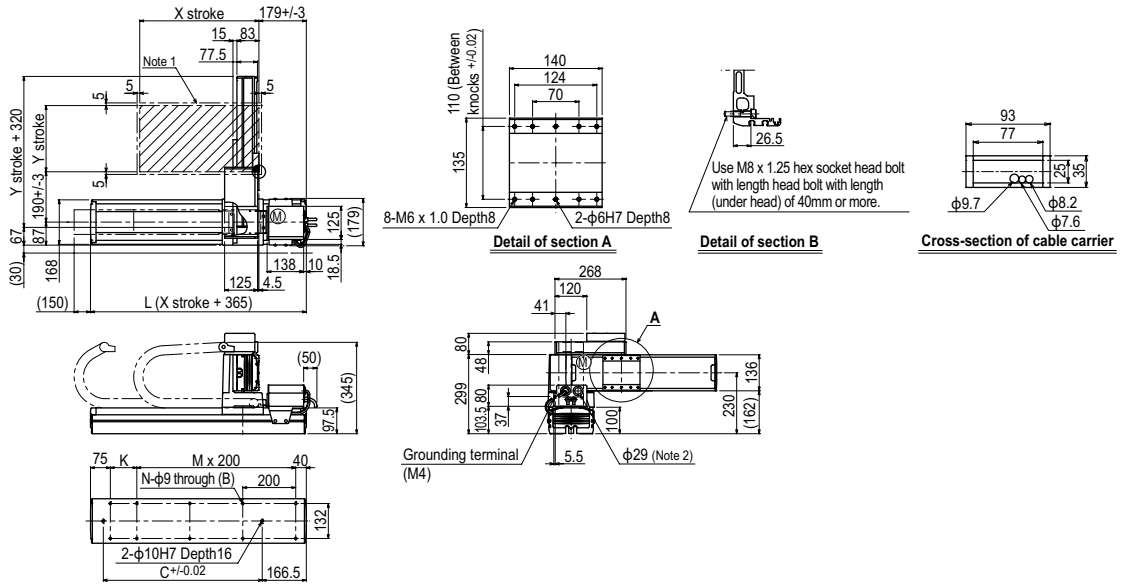

MXYx 2 axes

Arm type Whipover

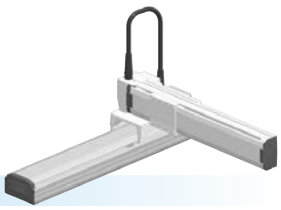

Ordering method

MXYx -	S	-	[ ]	-	[ ]	-	[ ]	-	RCX320-2	-	[ ]	-	R	-	[ ]	-	[ ]	-	[ ]	-	[ ]
Model	Cable		Combination		X-axis stroke		Y-axis stroke		Cable		Controller / Number of controllable axes		Safety standard		Regeneratine unit		Option A (OP.A)		Option B (OP.B)		Vision System		Absolute battery
			A1 A2 A3 A4		25 to 85cm		15 to 65cm		3L: 3.5m 5L: 5m 10L: 10m														

Specify various controller setting items. RCX320 ▶ P.626

Specification

	X-axis	Y-axis
Axis construction Note 1	F17	F14H
AC servo motor output (W)	400	200
Repeatability Note 2 (mm)	+/-0.01	+/-0.01
Drive system	Ball screw ϕ20	Ball screw ϕ15
Ball screw lead Note 3 (Deceleration ratio) (mm)	20	20
Maximum speed Note 4 (mm/sec)	1200	1200
Moving range (mm)	250 to 850	150 to 650
Robot cable length (m)	Standard: 3.5 Option: 5,10	

Note 1. Use caution that the flame machining (installation holes, tap holes) differs from single-axis robots'.
Note 2. Positioning repeatability in one direction.
Note 3. Leads not listed in the catalog are also available. Contact us for details.
Note 4.When the X-axis stroke is longer than 850mm, resonance of the ball screw may occur depending on the operation conditions (critical speed). In this case, reduce the speed setting on the program by referring to the maximum speeds shown in the table below.

Maximum payload (kg)

Y stroke (mm)	XY 2 axes
150	30
250	30
350	25
450	20
550	20
650	16

Controller

Controller	Operation method
RCX320-R	Programming / I/O point trace / Remote command / Operation using RS-232C communication

MXYx 2 axes A1

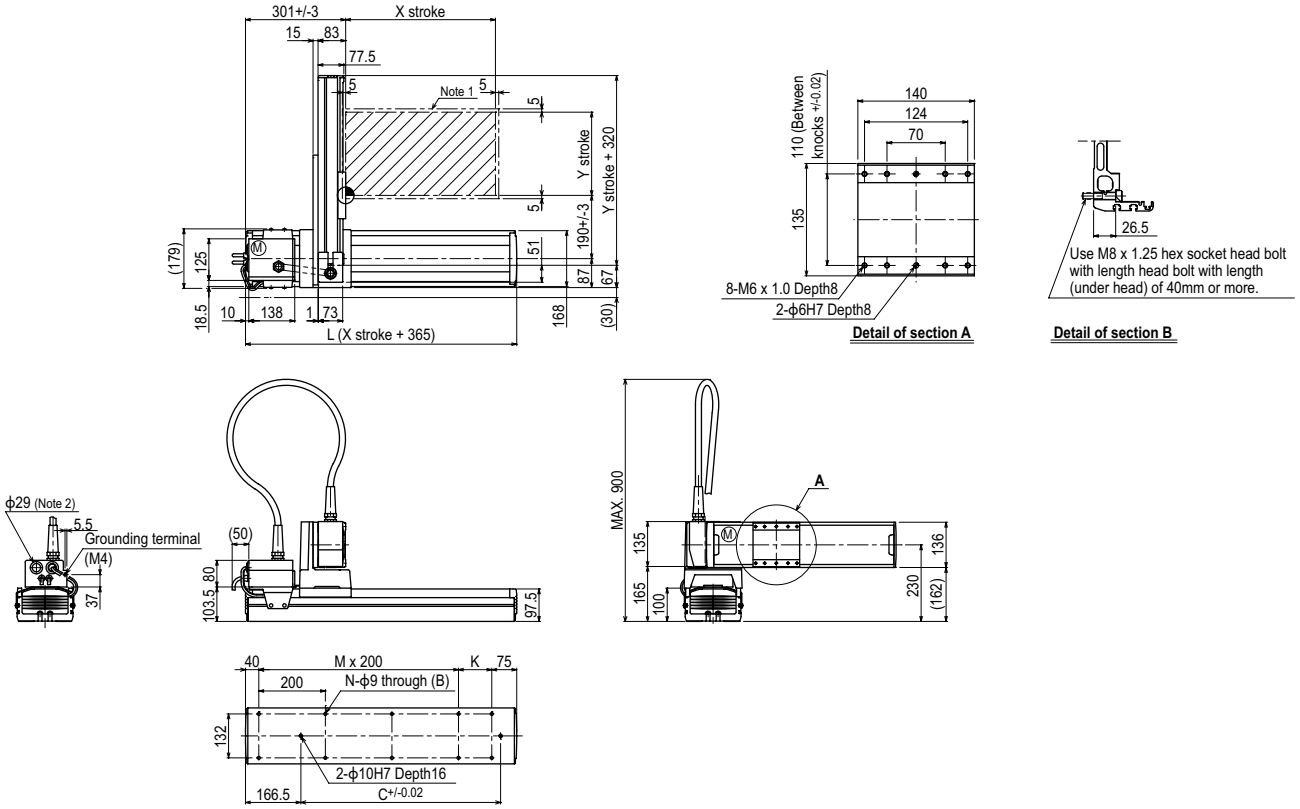

X stroke	250	350	450	550	650	750	850
L	615	715	815	915	1015	1115	1215
K	100	200	100	200	100	200	100
C	240	420	600	600	780	780	960
M	2	2	3	3	4	4	5
N	8	8	10	10	12	12	14

Y stroke	150	250	350	450	550	650

Maximum speed for each stroke (mm/sec) Note 3			
	X-axis	1200	960
	Speed setting	–	80%

Note 1. The moving range when returning to origin and the stop position when stopping by the mechanical stopper.
Note 2. User cable extraction port.

Note 3. When the X-axis stroke is longer than 850mm, resonance of the ball screw may occur depending on the operation conditions (critical speed). In this case, reduce the speed setting on the program by referring to the maximum speeds shown in the table at the left.

Controller RCX320 ▶ 626

MXYx 2 axes A2

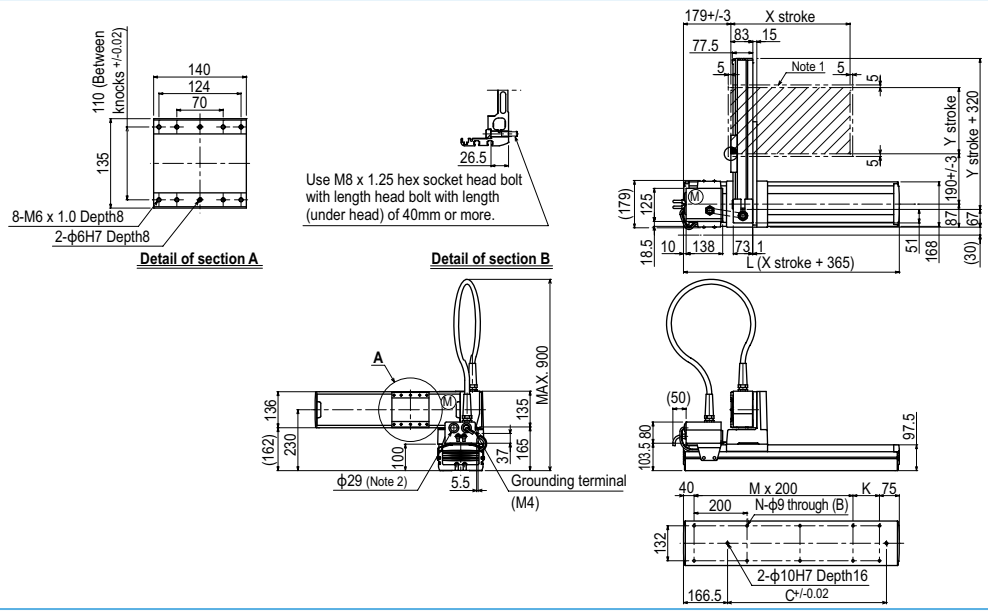

MXYx 2 axes A3

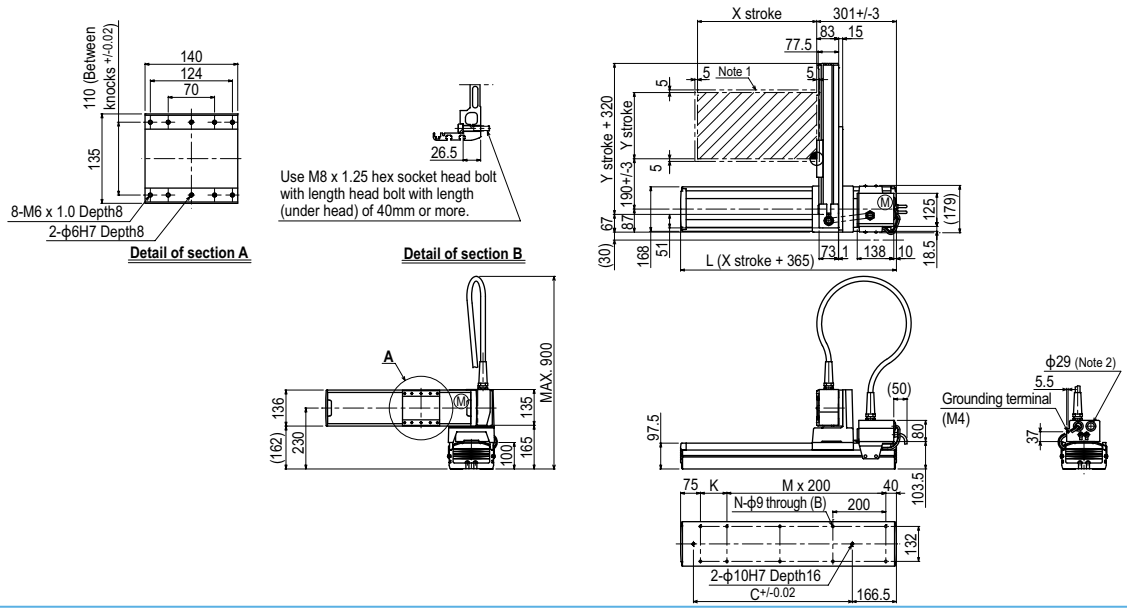

MXYx 2 axes A4

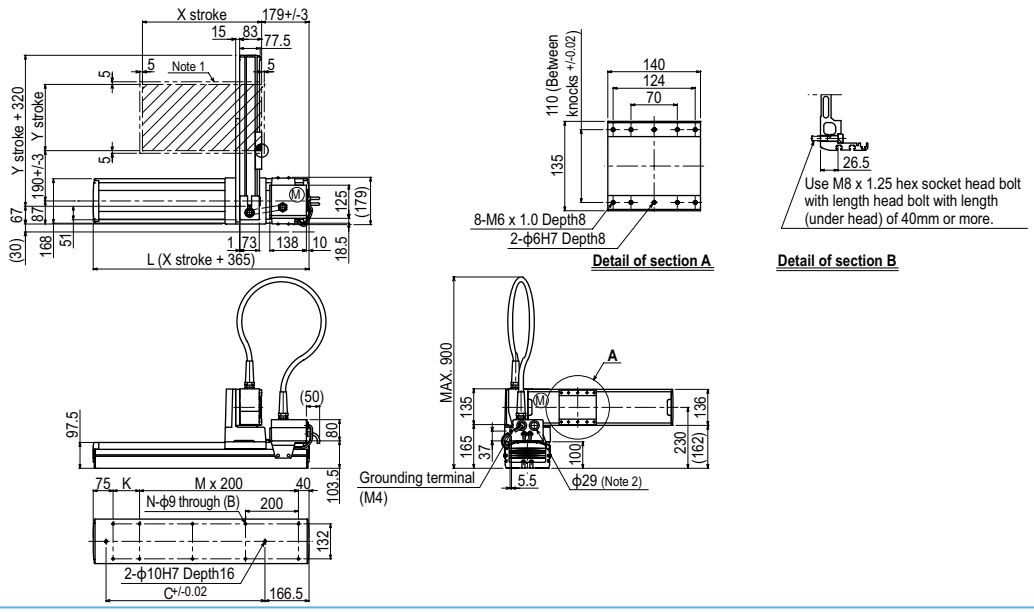

MXYx 2 axes / IO

Arm type | Cable carrier | Type with Y-axis I/O cable carrier added

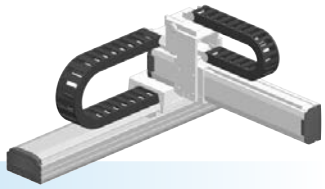

Ordering method

MXYx -	C -	[ ] -	[ ] -	[ ] -	IO -	[ ] -	RCX320-2 -	[ ] -	R -	[ ] -	[ ] -	[ ] -	[ ]
Model	Cable	Combination	X-axis stroke	Y-axis stroke	ZR-axis	Cable	Controller / Number of controllable axes	Safety standard	Regeneratine unit	Option A (OP.A)	Option B (OP.B)	Vision System	Absolute battery
		A1 A2 A3 A4	25 to 125cm	15 to 65cm		3L: 3.5m 5L: 5m 10L: 10m							

Specify various controller setting items. RCX320 ▶ P.626

Specification

	X-axis	Y-axis
Axis construction Note 1	F17	F14H
AC servo motor output (W)	400	200
Repeatability Note 2 (mm)	+/-0.01	+/-0.01
Drive system	Ball screw ϕ20	Ball screw ϕ15
Ball screw lead Note 3 (Deceleration ratio) (mm)	20	20
Maximum speed Note 4 (mm/sec)	1200	1200
Moving range (mm)	250 to 1250	150 to 650
Robot cable length (m)	Standard: 3.5 Option: 5,10	

Note 1. Use caution that the flame machining (installation holes, tap holes) differs from single-axis robots'.
Note 2. Positioning repeatability in one direction.
Note 3. Leads not listed in the catalog are also available. Contact us for details.
Note 4. When the X-axis stroke is longer than 850mm, resonance of the ball screw may occur depending on the operation conditions (critical speed). In this case, reduce the speed setting on the program by referring to the maximum speeds shown in the table below.

Maximum payload (kg)

Y stroke (mm)	XY 2 axes
150	29
250	29
350	24
450	19
550	19
650	15

Controller

Controller	Operation method
RCX320-R	Programming / I/O point trace / Remote command / Operation using RS-232C communication

MXYx 2 axes / IO A1

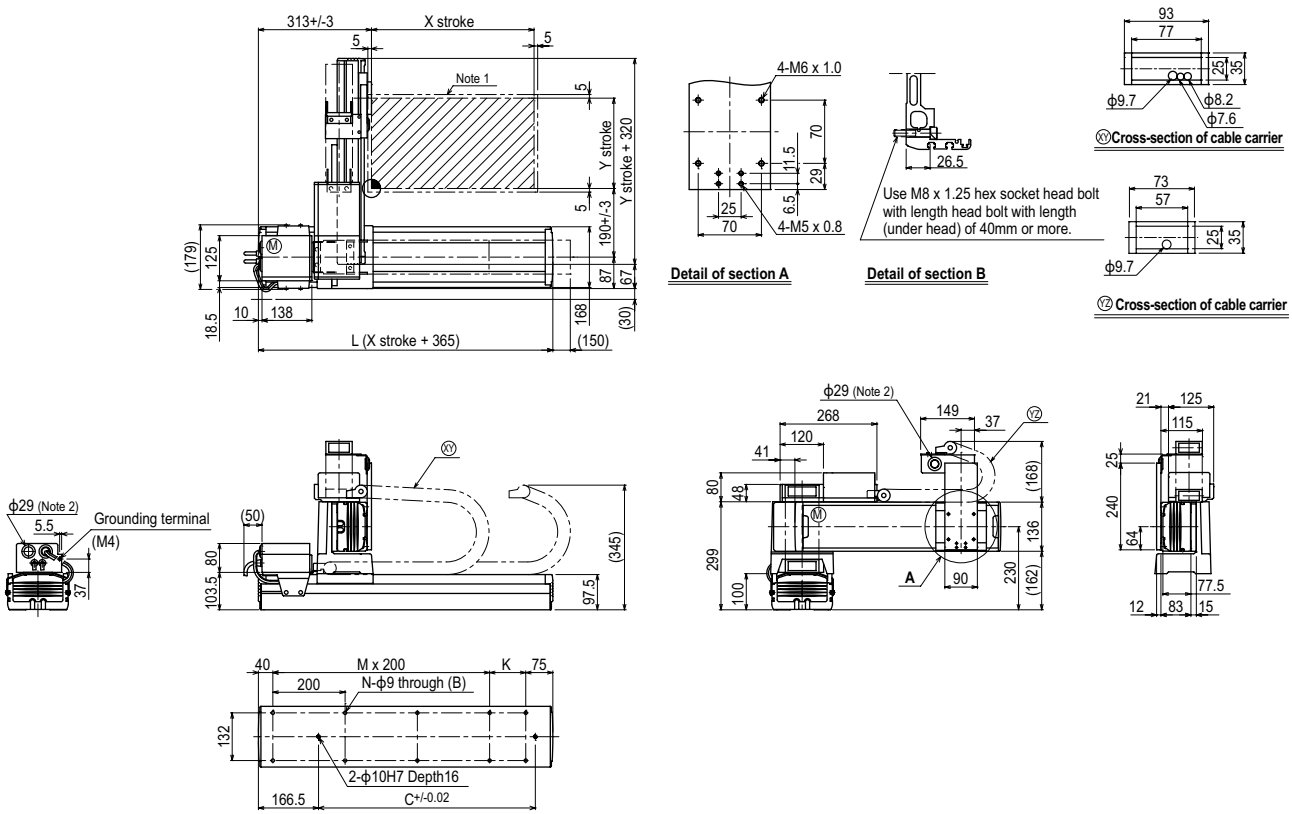

X stroke	250	350	450	550	650	750	850	950	1050	1150	1250
L	615	715	815	915	1015	1115	1215	1315	1415	1515	1615
K	100	200	100	200	100	200	100	200	100	200	100
C	240	420	600	780	780	960	960	1140	1140	1320	1320
M	2	2	3	3	4	4	5	5	6	6	7
N	8	8	10	10	12	12	14	14	16	16	18

Y stroke		150	250	350	450	550	650					
Maximum speed for each stroke (mm/sec) Note 3	X-axis	1200						960	840	720	600	480
	Speed setting	–						80%	70%	60%	50%	40%

Note 1. The moving range when returning to origin and the stop position when stopping by the mechanical stopper.
Note 2. User cable extraction port.

Note 3. When the X-axis stroke is longer than 850mm, resonance of the ball screw may occur depending on the operation conditions (critical speed). In this case, reduce the speed setting on the program by referring to the maximum speeds shown in the table at the left.

MXYx 3 axes / ZFL20/10

Arm type | Cable carrier | Z-axis: clamped base / moving table type (200W)

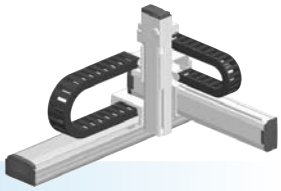

Ordering method

MXYx - C	Cable	Combination	X-axis stroke	Y-axis stroke	ZR-axis	Z-axis stroke	Cable	RCX340-3							
Model		A1 A2 A3 A4	25 to 125cm	15 to 65cm	ZFL20 ZFL10	15 to 35cm	3L: 3.5m 5L: 5m 10L: 10m	Controller / Number of controllable axes	Safety standard	Option A (OP.A)	Option B (OP.B)	Option C (OP.C)	Option D (OP.D)	Option E (OP.E)	Absolute battery

Specify various controller setting items. RCX340 ▶ P.636

Specification

	X-axis	Y-axis	Z-axis: ZFL20	Z-axis: ZFL10
Axis construction Note 1	F17	F14H	F10H-BK	
AC servo motor output (W)	400	200	200	
Repeatability Note 2 (mm)	+/-0.01	+/-0.01	+/-0.01	
Drive system	Ball screw ϕ20	Ball screw ϕ15	Ball screw ϕ15	
Ball screw lead Note 3 (Deceleration ratio) (mm)	20	20	20	10
Maximum speed Note 4 (mm/sec)	1200	1200	1200	600
Moving range (mm)	250 to 1250	150 to 650	150 to 350	
Robot cable length (m)	Standard: 3.5 Option: 5,10			

Note. The standard types are ZFL with higher rigidity as compared with ZF types which are conventional standard types. When you need the ZF type, please consult YAMAHA.
Note 1. Use caution that the flame machining (installation holes, tap holes) differs from single-axis robots'.
Note 2. Positioning repeatability in one direction.
Note 3. Leads not listed in the catalog are also available. Contact us for details.
Note 4. When the X-axis stroke is longer than 850mm, resonance of the ball screw may occur depending on the operation conditions (critical speed). In this case, reduce the speed setting on the program by referring to the maximum speeds shown in the table below.

Maximum payload (kg)

	Z stroke (mm)					
	ZFL20			ZFL10		
	150	250	350	150	250	350
150	8	8	8	15	15	15
250	8	8	8	15	15	15
350	8	8	8	15	15	15
450	8	8	8	12	11	10
550	8	8	8	12	11	10
650	8	7	6	8	7	6

Controller

Controller	Operation method
RCX340	Programming / I/O point trace / Remote command / Operation using RS-232C communication

MXYx 3 axes / ZFL20/10 A1

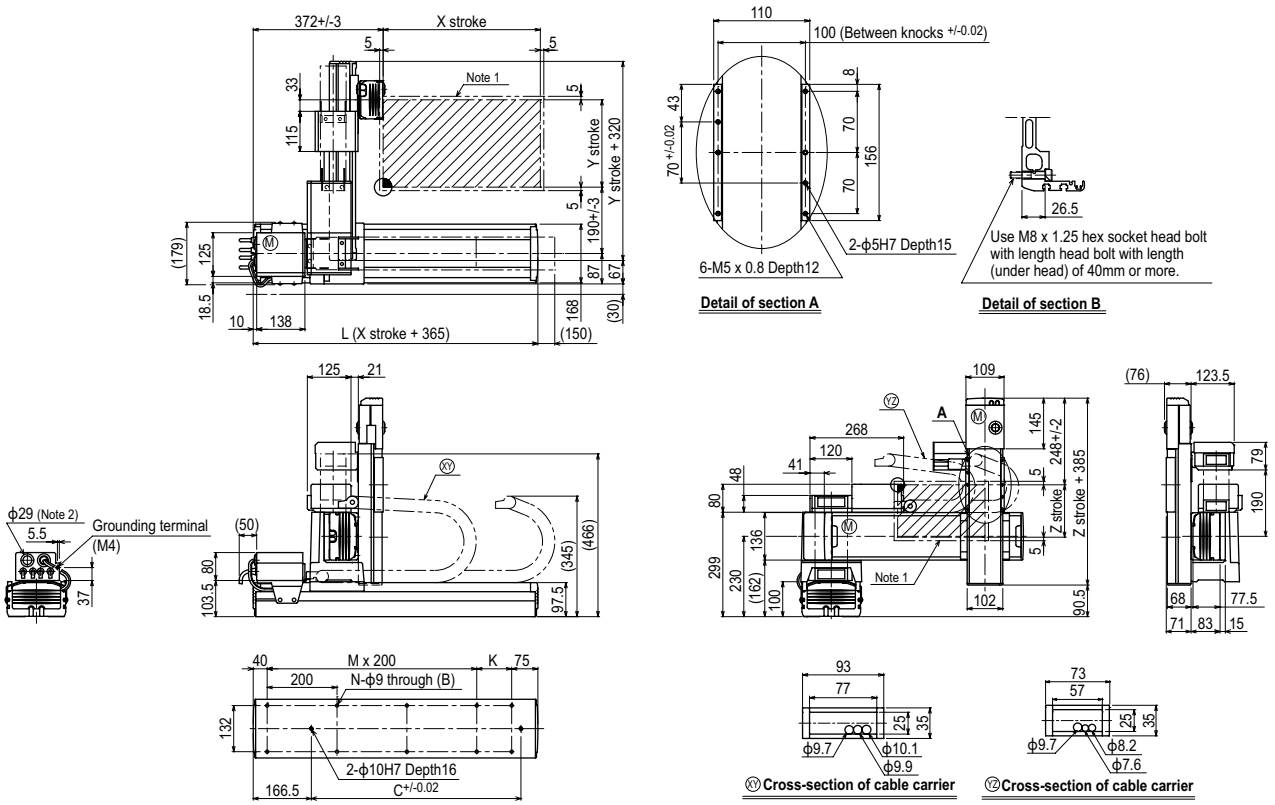

X stroke	250	350	450	550	650	750	850	950	1050	1150	1250
L	615	715	815	915	1015	1115	1215	1315	1415	1515	1615
K	100	200	100	200	100	200	100	200	100	200	100
C	240	420	600	600	780	780	960	960	1140	1140	1320
M	2	2	3	3	4	4	5	5	6	6	7
N	8	8	10	10	12	12	14	14	16	16	18

Y stroke	150	250	350	450	550	650

Z stroke	150	250	350

Maximum speed for each stroke (mm/sec) Note 3							
X-axis	1200	960	840	720	600	480
Speed setting	–	80%	70%	60%	50%	40%

Note 1. The moving range when returning to origin and the stop position when stopping by the mechanical stopper.
Note 2. User cable extraction port.

Note 3. When the X-axis stroke is longer than 850mm, resonance of the ball screw may occur depending on the operation conditions (critical speed). In this case, reduce the speed setting on the program by referring to the maximum speeds shown in the table at the left.

MXYx 3 axes / ZFH

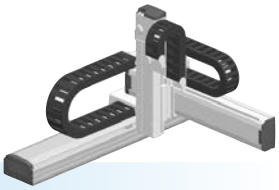

Arm type | Cable carrier | Z-axis: clamped table / moving base type (200W)

Ordering method

MXYx - C	-	-	-	-	- ZFH -	-	-	- RCX340-3 -	-	-	-	-	-	-	-
Model	Cable	Combination	X-axis stroke	Y-axis stroke	ZR-axis	Z-axis stroke	Cable	Controller / Number of controllable axes	Safety standard	Option A (OP.A)	Option B (OP.B)	Option C (OP.C)	Option D (OP.D)	Option E (OP.E)	Absolute battery
		A1 A2 A3 A4	25 to 125cm	15 to 65cm		15 to 35cm	3L: 3.5m 5L: 5m 10L: 10m								

Specify various controller setting items. RCX340 ▶ P.636

Specification

	X-axis	Y-axis	Z-axis
Axis construction Note 1	F17	F14H	F10H-BK
AC servo motor output (W)	400	200	200
Repeatability Note 2 (mm)	+/-0.01	+/-0.01	+/-0.01
Drive system	Ball screw ϕ20	Ball screw ϕ15	Ball screw ϕ15
Ball screw lead Note 3 (Deceleration ratio) (mm)	20	20	10
Maximum speed Note 4 (mm/sec)	1200	1200	600
Moving range (mm)	250 to 1250	150 to 650	150 to 350
Robot cable length (m)	Standard: 3.5 Option: 5,10		

Note. The standard types are ZFH with higher rigidity as compared with ZF types which are conventional standard types. When you need the ZF type, please consult YAMAHA.
Note 1. Use caution that the flame machining (installation holes, tap holes) differs from single-axis robots'.
Note 2. Positioning repeatability in one direction.
Note 3. Leads not listed in the catalog are also available. Contact us for details.
Note 4. When the X-axis stroke is longer than 850mm, resonance of the ball screw may occur depending on the operation conditions (critical speed). In this case, reduce the speed setting on the program by referring to the maximum speeds shown in the table below.

Maximum payload (kg)

	Z stroke (mm)		
Y stroke (mm)	150	250	350
150	14	13	12
250	14	13	12
350	14	13	12
450	12	11	10
550	12	11	10
650	8	7	6

Controller

Controller	Operation method
RCX340	Programming / I/O point trace / Remote command / Operation using RS-232C communication

MXYx 3 axes / ZFH A1

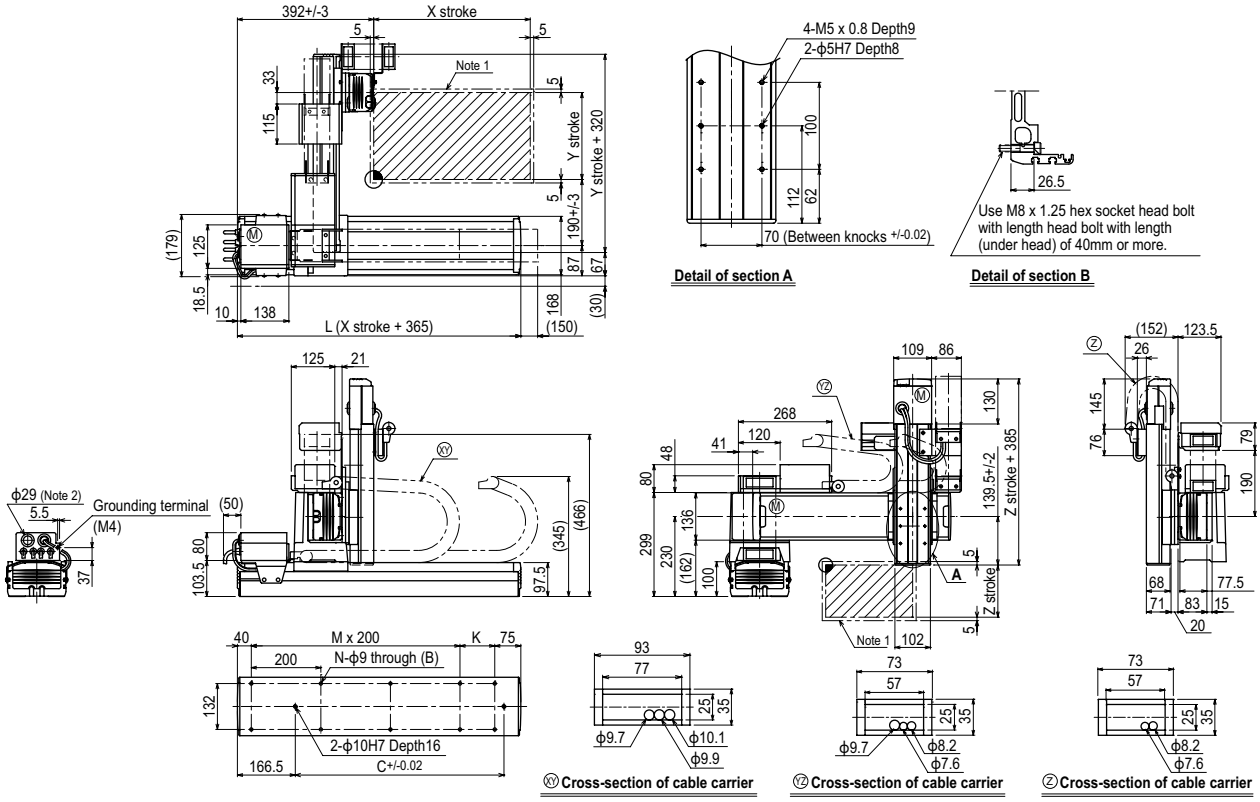

X stroke	250	350	450	550	650	750	850	950	1050	1150	1250
L	615	715	815	915	1015	1115	1215	1315	1415	1515	1615
K	100	200	100	200	100	200	100	200	100	200	100
C	240	420	600	600	780	780	960	960	1140	1140	1320
M	2	2	3	3	4	4	5	5	6	6	7
N	8	8	10	10	12	12	14	14	16	16	18

Y stroke	150	250	350	450	550	650

Z stroke	150	250	350

Maximum speed for each stroke (mm/sec) Note 3							
X-axis	1200	960	840	720	600	480
Speed setting	–	80%	70%	60%	50%	40%

Note 1. The moving range when returning to origin and the stop position when stopping by the mechanical stopper.
Note 2. User cable extraction port.
Note 3. When the X-axis stroke is longer than 850mm, resonance of the ball screw may occur depending on the operation conditions (critical speed). In this case, reduce the speed setting on the program by referring to the maximum speeds shown in the table at the left.

Controller RCX340 ▶ 636

MXYx 4 axes / ZRFL20/10

Arm type | Cable carrier | Z-axis: clamped base / moving table type (200W)+R-axis

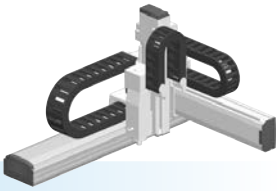

Ordering method

MXYx - C															
Model	Cable	Combination	X-axis stroke	Y-axis stroke	ZR-axis	Z-axis stroke	Cable	Controller / Number of controllable axes	Safety standard	Option A (OP.A)	Option B (OP.B)	Option C (OP.C)	Option D (OP.D)	Option E (OP.E)	Absolute battery
		A1 A2 A3 A4	25 to 125cm	15 to 65cm	ZRFL20 ZRFL10	15 to 35cm	3L: 3.5m 5L: 5m 10L: 10m	RCX340-4							

Specify various controller setting items. RCX340 ▶ P.636

Specification

	X-axis	Y-axis	Z-axis: ZRFL20	Z-axis: ZRFL10	R-axis
Axis construction Note 1	F17	F14H	F10H-BK		R5
AC servo motor output (W)	400	200	200		50
Repeatability Note 2 (XYZ: mm) (R: °)	+/-0.01	+/-0.01	+/-0.01		+/-0.0083
Drive system	Ball screw ϕ20	Ball screw ϕ15	Ball screw ϕ15		Harmonic gear
Ball screw lead Note 3 (Deceleration ratio) (mm)	20	20	20	10	(1/50)
Maximum speed Note 4 (XYZ: mm/sec) (R: °/sec)	1200	1200	1200	600	360
Moving range (XYZ: mm)(R: °)	250 to 1250	150 to 650	150 to 350		360
Robot cable length (m)	Standard: 3.5 Option: 5,10				

Note. The standard types are ZRFL with higher rigidity as compared with ZRF types which are conventional standard types. When you need the ZRF type, please consult YAMAHA.
Note 1.Use caution that the flame machining (installation holes, tap holes) differs from single-axis robots'.
Note 2.Positioning repeatability in one direction.
Note 3. Leads not listed in the catalog are also available. Contact us for details.
Note 4.When the X-axis stroke is longer than 850mm, resonance of the ball screw may occur depending on the operation conditions (critical speed). In this case, reduce the speed setting on the program by referring to the maximum speeds shown in the table below.

Maximum payload (kg)

Y stroke (mm)	Z stroke (mm) ZRFL20 150	ZRFL20 250	ZRFL20 350	ZRFL10 150	ZRFL10 250	ZRFL10 350
150	4	4	4	11	11	11
250	4	4	4	11	11	11
350	4	4	4	11	11	11
450	4	4	4	8	7	6
550	4	4	4	8	7	6
650	4	4	4	4	3	2

Controller

Controller	Operation method
RCX340	Programming / I/O point trace / Remote command / Operation using RS-232C communication

MXYx 4 axes / ZRFL20/10 A1

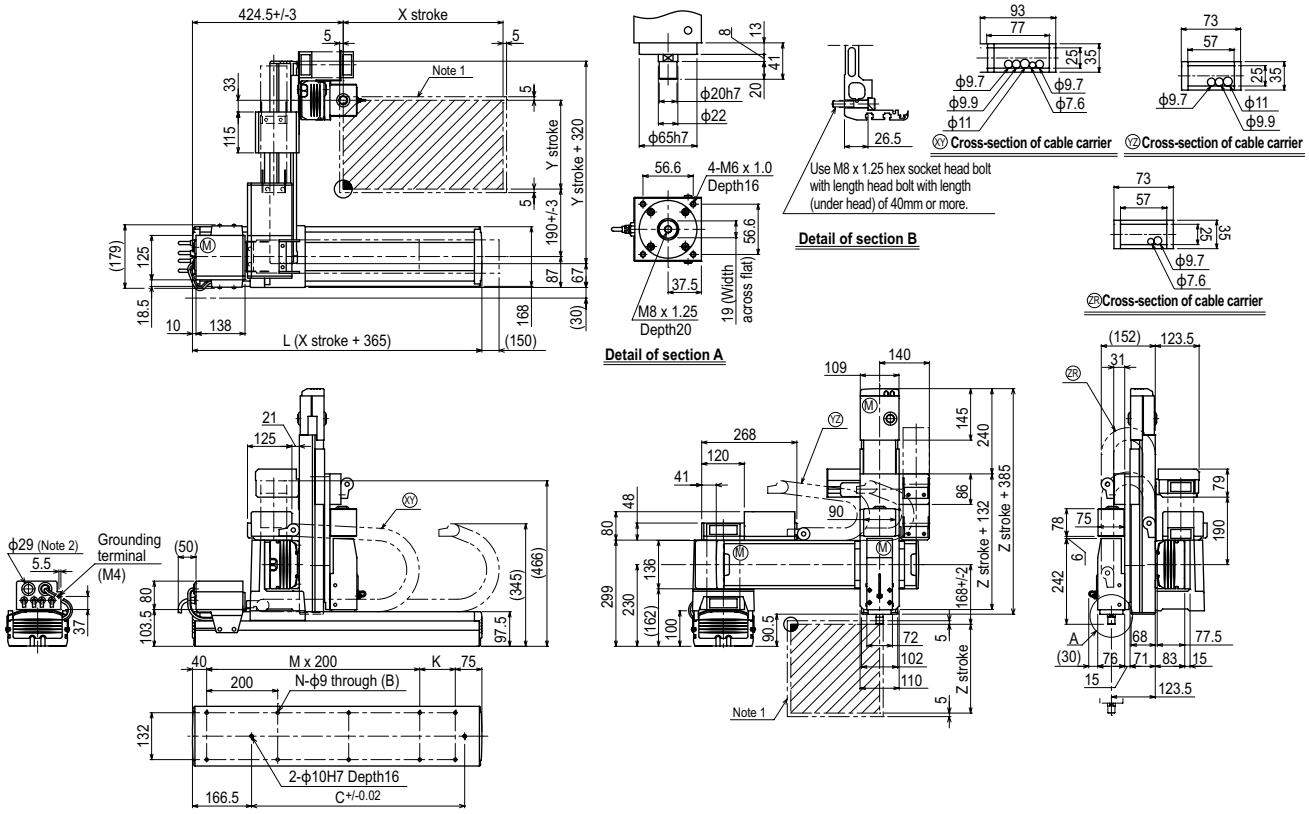

X stroke	250	350	450	550	650	750	850	950	1050	1150	1250
L	615	715	815	915	1015	1115	1215	1315	1415	1515	1615
K	100	200	100	200	100	200	100	200	100	200	100
C	240	420	600	600	780	780	960	960	1140	1140	1320
M	2	2	3	3	4	4	5	5	6	6	7
N	8	8	10	10	12	12	14	14	16	16	18

Y stroke	150	250	350	450	550	650

Z stroke	150	250	350

Maximum speed for each stroke (mm/sec) Note 3							
X-axis	1200	960	840	720	600	480
Speed setting	–	80%	70%	60%	50%	40%

Note 1. The moving range when returning to origin and the stop position when stopping by the mechanical stopper.
Note 2. User cable extraction port.

Note 3. When the X-axis stroke is longer than 850mm, resonance of the ball screw may occur depending on the operation conditions (critical speed). In this case, reduce the speed setting on the program by referring to the maximum speeds shown in the table at the left.

MXYx 4 axes / ZRFH

Arm type | Cable carrier | Z-axis: clamped table / moving base type (200W)+R-axis

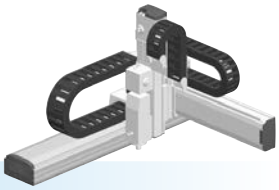

Ordering method

MXYx - C	-		-		-		- ZRFH -			-	RCX340-4	-		-		-		-		-	
Model	Cable	Combination	X-axis stroke	Y-axis stroke	ZR-axis	Z-axis stroke	Cable	Controller / Number of controllable axes	Safety standard	Option A (OP.A)	Option B (OP.B)	Option C (OP.C)	Option D (OP.D)	Option E (OP.E)	Absolute battery
		A1 A2 A3 A4	25 to 125cm	15 to 65cm		15 to 35cm	3L: 3.5m 5L: 5m 10L: 10m								

Specify various controller setting items. RCX340 ▶ P.636

Specification

	X-axis	Y-axis	Z-axis	R-axis
Axis construction Note 1	F17	F14H	F10H-BK	R5
AC servo motor output (W)	400	200	200	50
Repeatability Note 2 (XYZ: mm)(R: °)	+/-0.01	+/-0.01	+/-0.01	+/-0.0083
Drive system	Ball screw ϕ20	Ball screw ϕ15	Ball screw ϕ15	Harmonic gear
Ball screw lead Note 3 (Deceleration ratio) (mm)	20	20	10	(1/50)
Maximum speed Note 4 (XYZ: mm/sec) (R: °/sec)	1200	1200	600	360
Moving range (XYZ: mm)(R: °)	250 to 1250	150 to 650	150 to 350	360
Robot cable length (m)	Standard: 3.5 Option: 5,10			

Note. The standard types are ZRFH with higher rigidity as compared with ZRF types which are conventional standard types. When you need the ZRF type, please consult YAMAHA.
Note 1. Use caution that the flame machining (installation holes, tap holes) differs from single-axis robots'.
Note 2. Positioning repeatability in one direction.
Note 3. Leads not listed in the catalog are also available. Contact us for details.
Note 4. When the X-axis stroke is longer than 850mm, resonance of the ball screw may occur depending on the operation conditions (critical speed). In this case, reduce the speed setting on the program by referring to the maximum speeds shown in the table below.

Maximum payload (kg)

	Z stroke (mm)		
Y stroke (mm)	150	250	350
150	11	9	8
250	11	9	8
350	11	9	8
450	8	7	6
550	8	7	6
650	4	3	2

Controller

Controller	Operation method
RCX340	Programming / I/O point trace / Remote command / Operation using RS-232C communication

MXYx 4 axes / ZRFH A1

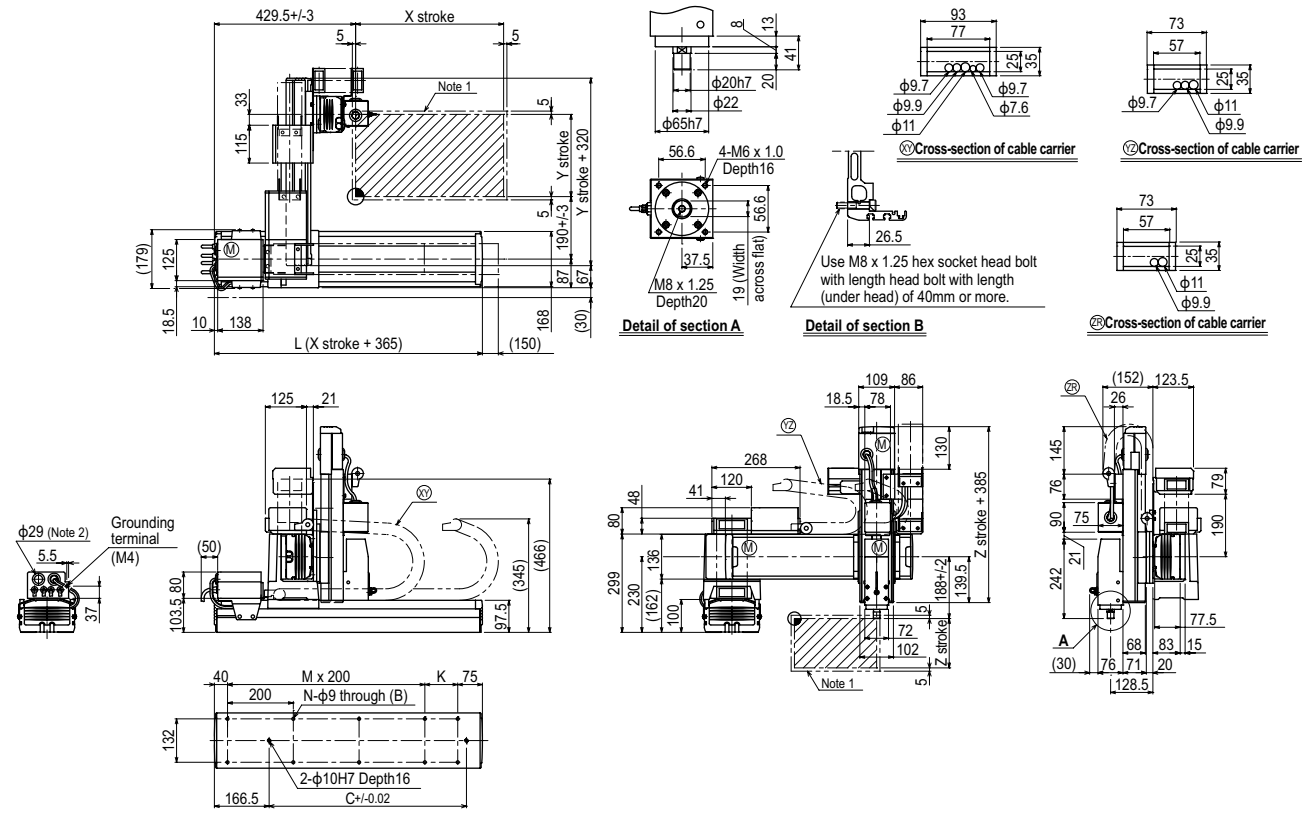

X stroke	250	350	450	550	650	750	850	950	1050	1150	1250
L	615	715	815	915	1015	1115	1215	1315	1415	1515	1615
K	100	200	100	200	100	200	100	200	100	200	100
C	240	420	600	600	780	780	960	960	1140	1140	1320
M	2	2	3	3	4	4	5	5	6	6	7
N	8	8	10	10	12	12	14	14	16	16	18

Y stroke	150	250	350	450	550	650

Z stroke	150	250	350

Maximum speed for each stroke (mm/sec) Note 3								
	X-axis	1200	960	840	720	600	480
	Speed setting	–	80%	70%	60%	50%	40%

Note 1. The moving range when returning to origin and the stop position when stopping by the mechanical stopper.
Note 2. User cable extraction port.
Note 3. When the X-axis stroke is longer than 850mm, resonance of the ball screw may occur depending on the operation conditions (critical speed). In this case, reduce the speed setting on the program by referring to the maximum speeds shown in the table at the left.

Controller RCX340 ▶ 636

MEMO

HXYx 2 axes

Arm type Cable carrier

Ordering method

HXYx -	C	-		-		-		-	RCX320-2	-		-	R	-		-		-		-	
Model	Cable	Combination		X-axis stroke		Y-axis stroke		Cable	Controller / Number of controllable axes	Safety standard		Regeneratine unit		Option A (OP.A)		Option B (OP.B)		Vision System		Absolute battery
		A1 A2 A3 A4		25 to 125cm		25 to 65cm		3L: 3.5m 5L: 5m 10L: 10m												

Specify various controller setting items. RCX320 ▶ P.626

Specification

	X-axis	Y-axis
Axis construction Note 1	F20	F17
AC servo motor output (W)	600	400
Repeatability Note 2 (mm)	+/-0.01	+/-0.01
Drive system	Ball screw ϕ20	Ball screw ϕ20
Ball screw lead Note 3 (Deceleration ratio) (mm)	20	20
Maximum speed Note 4 (mm/sec)	1200	1200
Moving range (mm)	250 to 1250	250 to 650
Robot cable length (m)	Standard: 3.5 Option: 5,10	

Note 1. Use caution that the flame machining (installation holes, tap holes) differs from single-axis robots'.
Note 2. Positioning repeatability in one direction.
Note 3. Leads not listed in the catalog are also available. Contact us for details.
Note 4. When the X-axis stroke is longer than 850mm, resonance of the ball screw may occur depending on the operation conditions (critical speed). In this case, reduce the speed setting on the program by referring to the maximum speeds shown in the table below.

Maximum payload (kg)

Y stroke (mm)	XY 2 axes
250	40
350	40
450	35
550	30
650	30

Controller

Controller	Operation method
RCX320-R	Programming / I/O point trace / Remote command / Operation using RS-232C communication

HXYx 2 axes A1

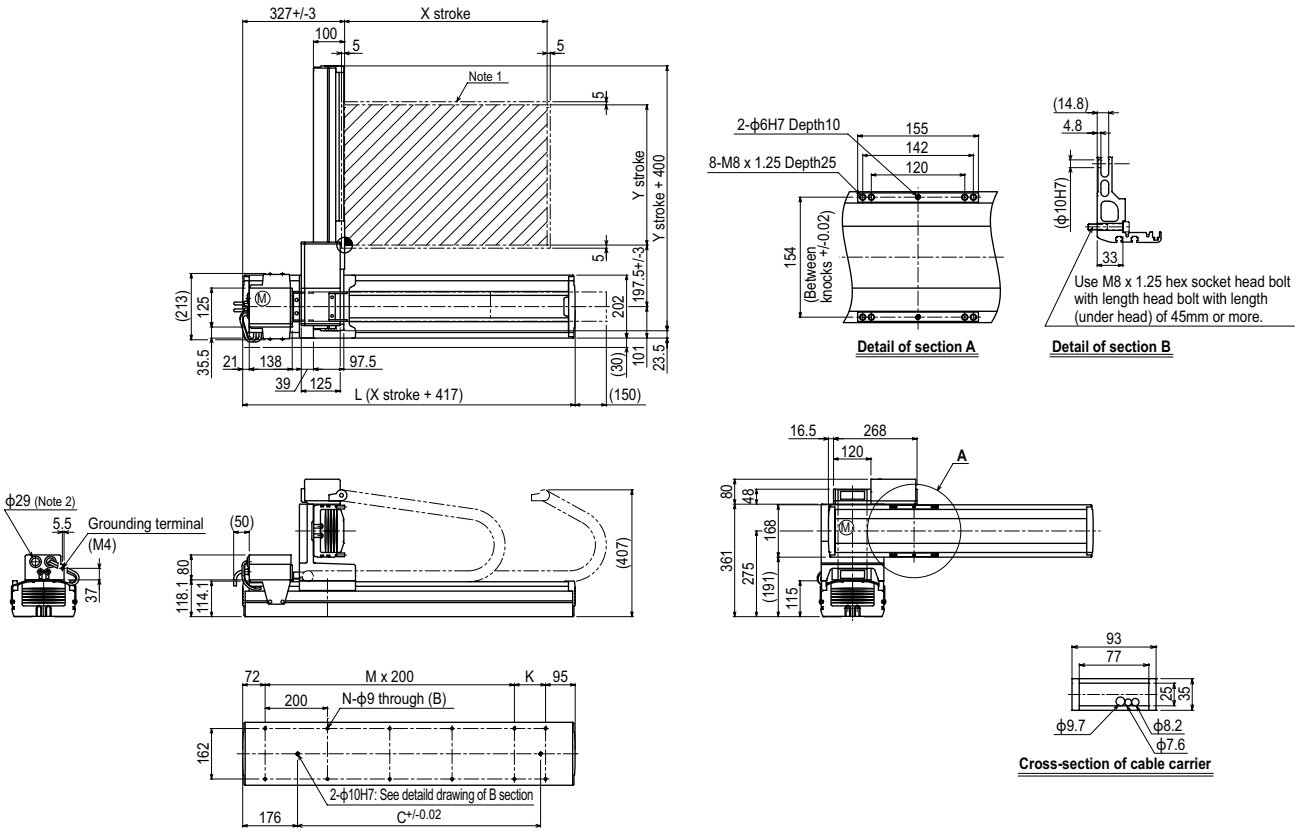

X stroke	250	350	450	550	650	750	850	950	1050	1150	1250
L	667	767	867	967	1067	1167	1267	1367	1467	1567	1667
K	100	200	100	200	100	200	100	200	100	200	100
C	420	420	600	600	780	780	960	960	1140	1320	1320
M	2	2	3	3	4	4	5	5	6	6	7
N	8	8	10	10	12	12	14	14	16	16	18

Y stroke	250	350	450	550	650
Maximum speed for each stroke (mm/sec) Note 3 — X-axis	1200				
Maximum speed for each stroke (mm/sec) Note 3 — Speed setting	–				

X stroke	850	950	1050	1150	1250
Maximum speed for each stroke (mm/sec) Note 3 — X-axis	960	840	720	600	480
Maximum speed for each stroke (mm/sec) Note 3 — Speed setting	80%	70%	60%	50%	40%

Note 1. The moving range when returning to origin and the stop position when stopping by the mechanical stopper.
Note 2. User cable extraction port.

Note 3. When the X-axis stroke is longer than 850mm, resonance of the ball screw may occur depending on the operation conditions (critical speed). In this case, reduce the speed setting on the program by referring to the maximum speeds shown in the table at the left.

HXYx 2 axes A2

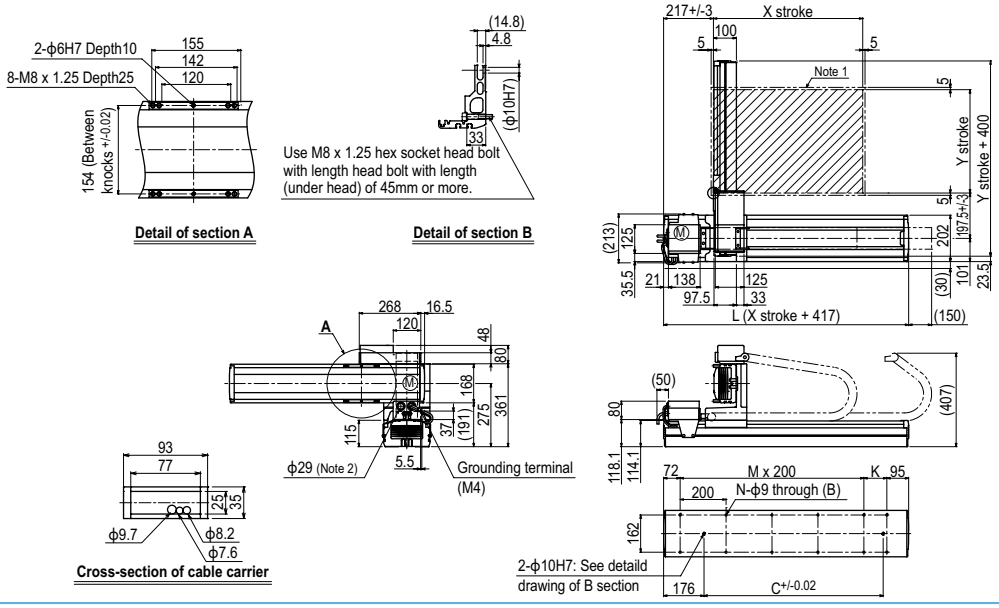

HXYx 2 axes A3

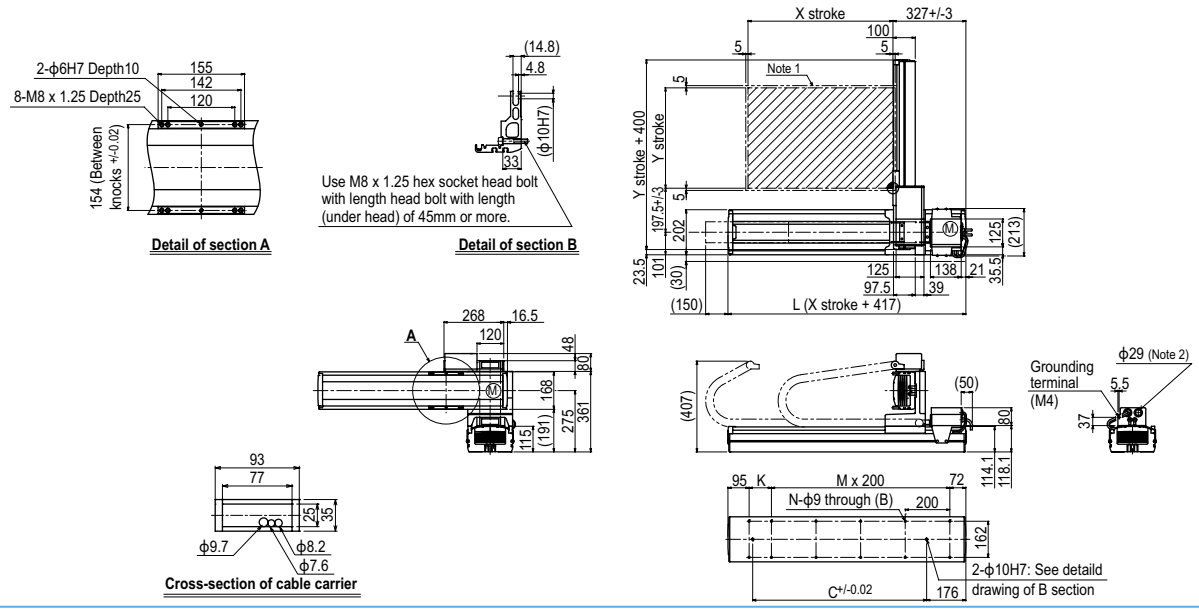

HXYx 2 axes A4

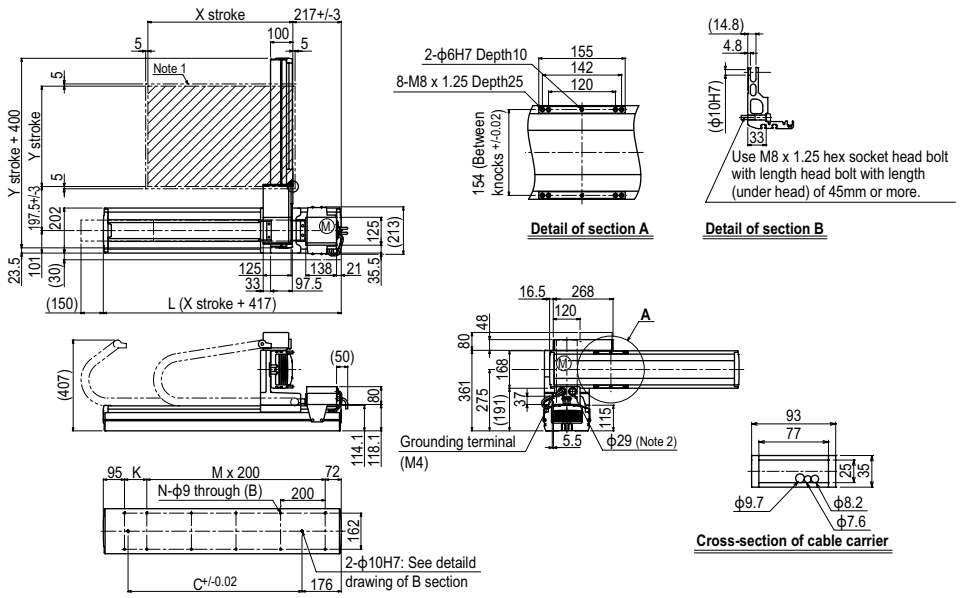

HXYx 3 axes / ZL

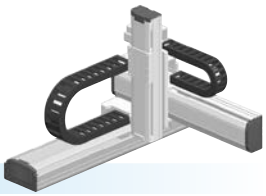

Arm type | Cable carrier | Z-axis: clamped base / moving table type (200W)

Ordering method

HXYx - C - [ ] - [ ] - [ ] - ZL - [ ] - [ ] - RCX340-3 - [ ] - [ ] - [ ] - [ ] - [ ] - [ ] - [ ]

Model	Cable	Combination	X-axis stroke	Y-axis stroke	ZR-axis	Z-axis stroke	Cable	Controller / Number of controllable axes	Safety standard	Option A (OP.A)	Option B (OP.B)	Option C (OP.C)	Option D (OP.D)	Option E (OP.E)	Absolute battery
		A1 A2 A3 A4	25 to 125cm	25 to 65cm		25 to 55cm	3L: 3.5m 5L: 5m 10L: 10m								

Specify various controller setting items. RCX340 ▶ P.636

Specification

	X-axis	Y-axis	Z-axis
Axis construction Note 1	F20	F17	F14H-BK
AC servo motor output (W)	600	400	200
Repeatability Note 2 (mm)	+/-0.01	+/-0.01	+/-0.01
Drive system	Ball screw ϕ20	Ball screw ϕ20	Ball screw ϕ15
Ball screw lead Note 3 (Deceleration ratio) (mm)	20	20	10
Maximum speed Note 4 (mm/sec)	1200	1200	600
Moving range (mm)	250 to 1250	250 to 650	250 to 550
Robot cable length (m)	Standard: 3.5 Option: 5,10		

Note 1. Use caution that the flame machining (installation holes, tap holes) differs from single-axis robots'.
Note 2. Positioning repeatability in one direction.
Note 3. Leads not listed in the catalog are also available. Contact us for details.
Note 4. When the X-axis stroke is longer than 850mm, resonance of the ball screw may occur depending on the operation conditions (critical speed). In this case, reduce the speed setting on the program by referring to the maximum speeds shown in the table below.

Maximum payload (kg)

	Z stroke (mm)			
Y stroke (mm)	250	350	450	550
250	20	20	20	20
350	20	20	20	20
450	20	20	19	18
550	18	17	16	15
650	18	17	16	15

Controller

Controller	Operation method
RCX340	Programming / I/O point trace / Remote command / Operation using RS-232C communication

HXYx 3 axes / ZL A1

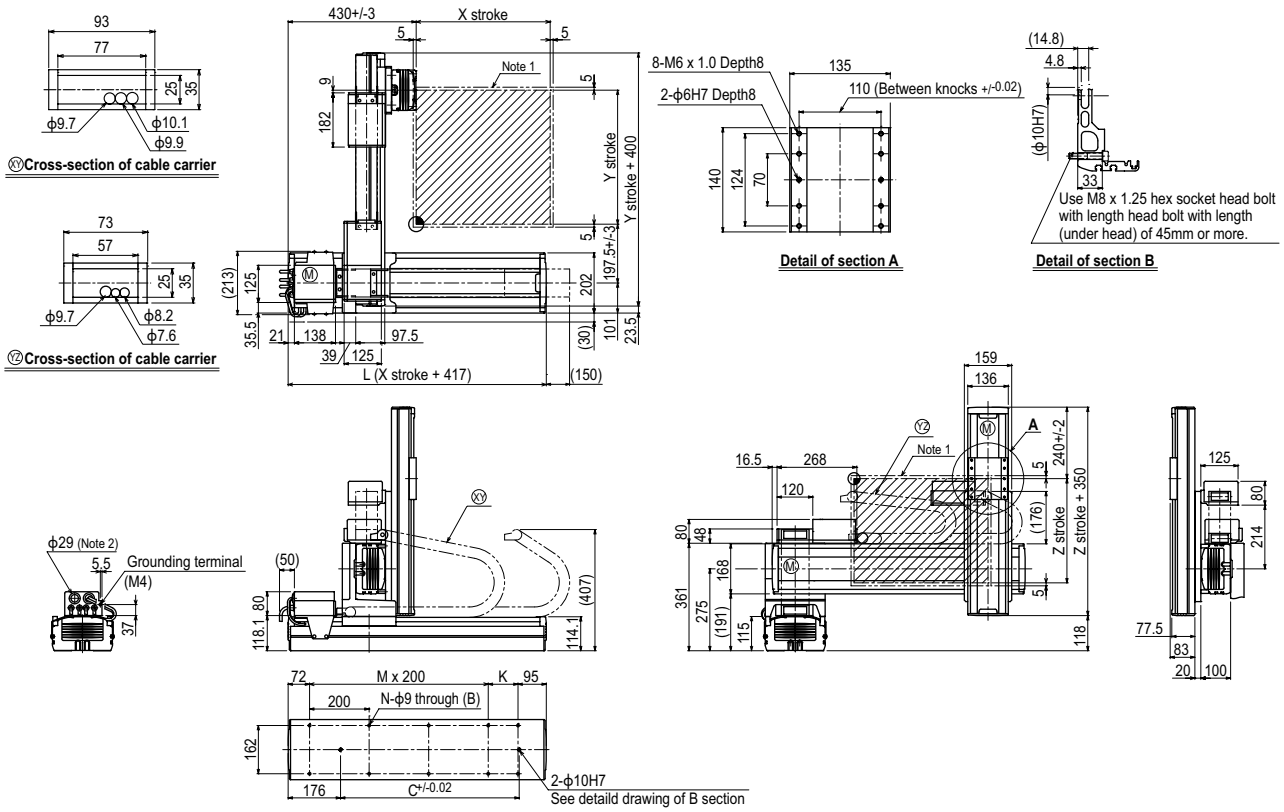

X stroke	250	350	450	550	650	750	850	950	1050	1150	1250
L	667	767	867	967	1067	1167	1267	1367	1467	1567	1667
K	100	200	100	200	100	200	100	200	100	200	100
C	420	420	600	600	780	780	960	960	1140	1320	1320
M	2	2	3	3	4	4	5	5	6	6	7
N	8	8	10	10	12	12	14	14	16	16	18

Y stroke	250	350	450	550	650
Z stroke	250	350	450	550	

Maximum speed for each stroke (mm/sec) Note 3								
	X-axis	1200	960	840	720	600	480
	Speed setting	–	80%	70%	60%	50%	40%

Note 1. The moving range when returning to origin and the stop position when stopping by the mechanical stopper.
Note 2. User cable extraction port.
Note 3. When the X-axis stroke is longer than 850mm, resonance of the ball screw may occur depending on the operation conditions (critical speed). In this case, reduce the speed setting on the program by referring to the maximum speeds shown in the table at the left.

Controller RCX340 ▶ 636

HXYx 3 axes / ZH

Arm type | Cable carrier | Z-axis: clamped table / moving base type (200W)

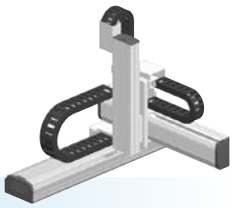

Ordering method

HXYx - C	-		-		-		- ZH -			-		- RCX340-3 -							
Model	Cable	Combination	X-axis stroke	Y-axis stroke	ZR-axis	Z-axis stroke	Cable	Controller / Number of controllable axes	Safety standard	Option A (OP.A)	Option B (OP.B)	Option C (OP.C)	Option D (OP.D)	Option E (OP.E)	Absolute battery
		A1 A2 A3 A4	25 to 125cm	25 to 65cm		25 to 55cm	3L: 3.5m 5L: 5m 10L: 10m								

Specify various controller setting items. RCX340 ▶ P.636

Specification

	X-axis	Y-axis	Z-axis
Axis construction Note 1	F20	F17	F14H-BK
AC servo motor output (W)	600	400	200
Repeatability Note 2 (mm)	+/-0.01	+/-0.01	+/-0.01
Drive system	Ball screw ϕ20	Ball screw ϕ20	Ball screw ϕ15
Ball screw lead Note 3 (Deceleration ratio) (mm)	20	20	5
Maximum speed Note 4 (mm/sec) (°/sec)	1200	1200	300
Moving range (mm)	250 to 1250	250 to 650	250 to 550
Robot cable length (m)	Standard: 3.5 Option: 5,10		

Note 1. Use caution that the flame machining (installation holes, tap holes) differs from single-axis robots'.
Note 2. Positioning repeatability in one direction.
Note 3. Leads not listed in the catalog are also available. Contact us for details.
Note 4. When the X-axis stroke is longer than 850mm, resonance of the ball screw may occur depending on the operation conditions (critical speed). In this case, reduce the speed setting on the program by referring to the maximum speeds shown in the table below.

Maximum payload (kg)

	Z stroke (mm)			
Y stroke (mm)	250	350	450	550
250	25	25	24	23
350	25	25	24	23
450	20	20	19	18
550	18	17	16	15
650	18	17	16	15

Controller

Controller	Operation method
RCX340	Programming / I/O point trace / Remote command / Operation using RS-232C communication

HXYx 3 axes / ZH A1

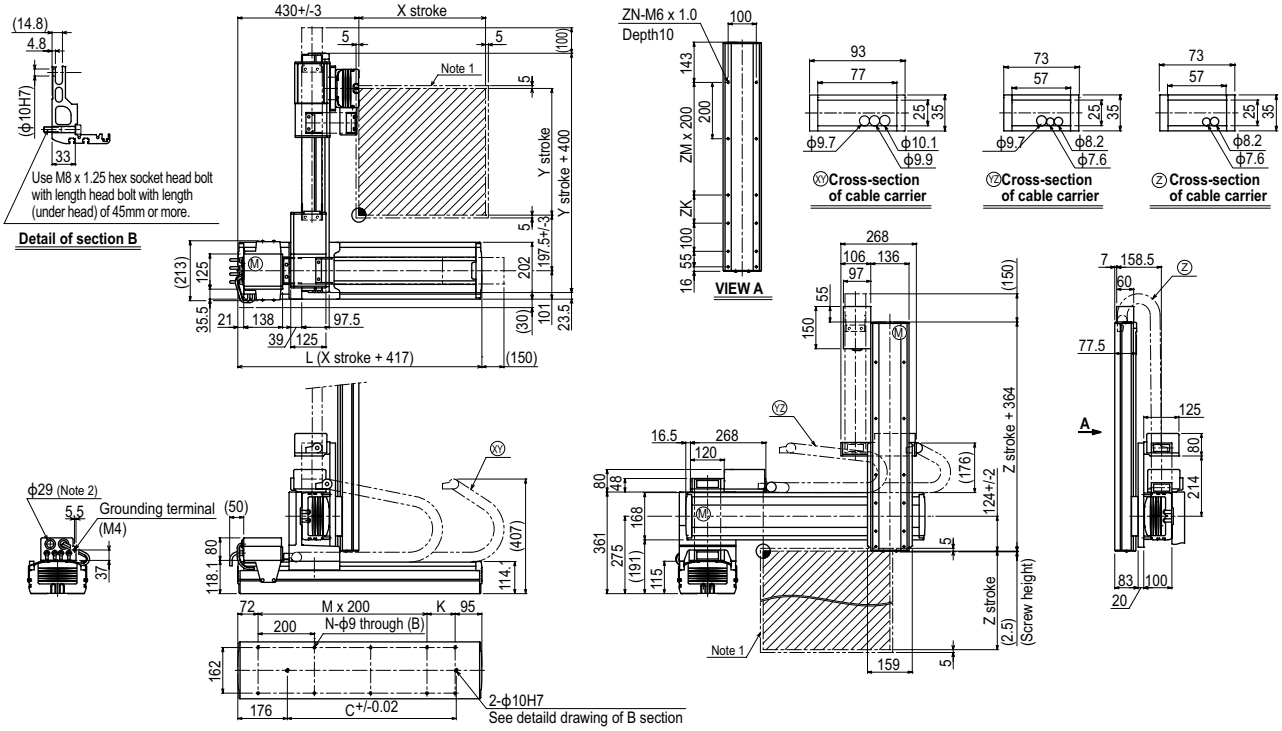

X stroke	250	350	450	550	650	750	850	950	1050	1150	1250
L	667	767	867	967	1067	1167	1267	1367	1467	1567	1667
K	100	200	100	200	100	200	100	200	100	200	100
C	420	420	600	600	780	780	960	960	1140	1320	1320
M	2	2	3	3	4	4	5	5	6	6	7
N	8	8	10	10	12	12	14	14	16	16	18

Y stroke	250	350	450	550	650

Z stroke	250	350	450	550
ZK	100	200	100	200
ZM	1	1	2	2
ZN	10	10	12	12

Maximum speed for each stroke (mm/sec) Note 3								
X-axis	1200			960	840	720	600	480
Speed setting	–			80%	70%	60%	50%	40%

Note 1. The moving range when returning to origin and the stop position when stopping by the mechanical stopper.
Note 2. User cable extraction port.
Note 3. When the X-axis stroke is longer than 850mm, resonance of the ball screw may occur depending on the operation conditions (critical speed). In this case, reduce the speed setting on the program by referring to the maximum speeds shown in the table at the left.

HXYx 4 axes / ZRL

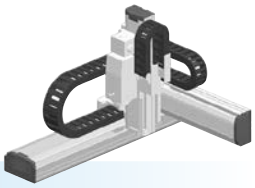

Arm type | Cable carrier | Z-axis: clamped base / moving table type (200W)+R-axis

Ordering method

Model	Cable	Combination	X-axis stroke	Y-axis stroke	ZR-axis	Z-axis stroke	Cable	Controller / Number of controllable axes	Safety standard	Option A (OP.A)	Option B (OP.B)	Option C (OP.C)	Option D (OP.D)	Option E (OP.E)	Absolute battery
HXYx	C	A1 / A2 / A3 / A4	25 to 125cm	25 to 65cm	ZRL	25 to 55cm	3L: 3.5m / 5L: 5m / 10L: 10m	RCX340-4							

Specify various controller setting items. RCX340 ▶ P.636

Specification

	X-axis	Y-axis	Z-axis	R-axis
Axis construction Note 1	F20	F17	F14H-BK	R20
AC servo motor output (W)	600	400	200	200
Repeatability Note 2 (XYZ: mm)(R: °)	+/-0.01	+/-0.01	+/-0.01	+/-0.0083
Drive system	Ball screw ϕ20	Ball screw ϕ20	Ball screw ϕ15	Harmonic gear
Ball screw lead Note 3 (Deceleration ratio) (mm)	20	20	10	(1/50)
Maximum speed Note 4 (XYZ: mm/sec) (R: °/sec)	1200	1200	600	360
Moving range (XYZ: mm) (R: °)	250 to 1250	250 to 650	250 to 550	360
Robot cable length (m)	Standard: 3.5 Option: 5,10			

Note 1. Use caution that the flame machining (installation holes, tap holes) differs from single-axis robots'.
Note 2. Positioning repeatability in one direction.
Note 3. Leads not listed in the catalog are also available. Contact us for details.
Note 4. When the X-axis stroke is longer than 850mm, resonance of the ball screw may occur depending on the operation conditions (critical speed). In this case, reduce the speed setting on the program by referring to the maximum speeds shown in the table below.

Maximum payload (kg)

Y stroke (mm)	Z stroke (mm) 250	350	450	550
250	12	12	12	12
350	12	12	12	12
450	12	12	12	11
550	10	9	8	7
650	10	9	8	7

Controller

Controller	Operation method
RCX340	Programming / I/O point trace / Remote command / Operation using RS-232C communication

HXYx 4 axes / ZRL A1

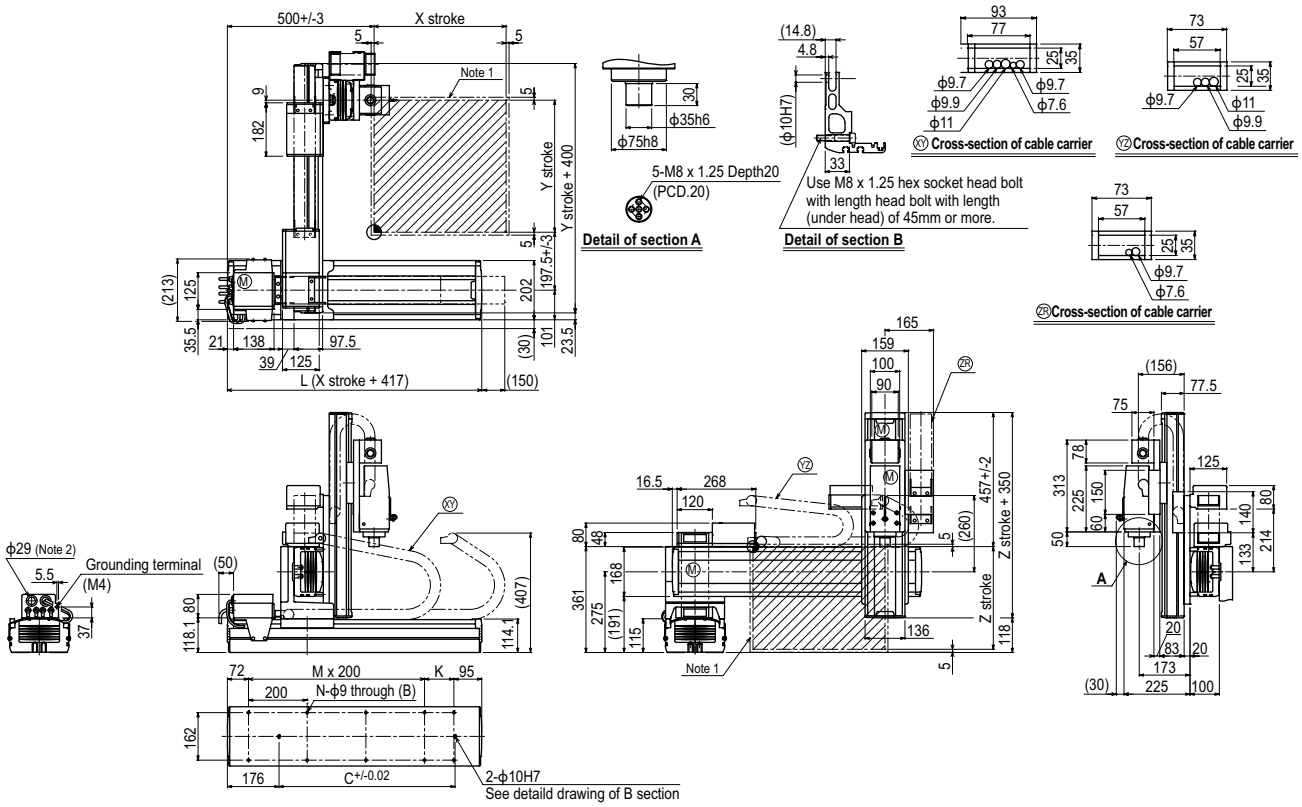

X stroke	250	350	450	550	650	750	850	950	1050	1150	1250
L	667	767	867	967	1067	1167	1267	1367	1467	1567	1667
K	100	200	100	200	100	200	100	200	100	200	100
C	420	420	600	600	780	780	960	960	1140	1320	1320
M	2	2	3	3	4	4	5	5	6	6	7
N	8	8	10	10	12	12	14	14	16	16	18

Y stroke	250	350	450	550	650
Z stroke	250	350	450	550	

Maximum speed for each stroke (mm/sec) Note 3								
X-axis	1200				960	840	720	600	480
Speed setting	–				80%	70%	60%	50%	40%

Note 1. The moving range when returning to origin and the stop position when stopping by the mechanical stopper.
Note 2. User cable extraction port.
Note 3. When the X-axis stroke is longer than 850mm, resonance of the ball screw may occur depending on the operation conditions (critical speed). In this case, reduce the speed setting on the program by referring to the maximum speeds shown in the table at the left.

HXYx 4 axes / ZRH

Arm type | Cable carrier | Z-axis: clamped table / moving base type (200W)+R-axis

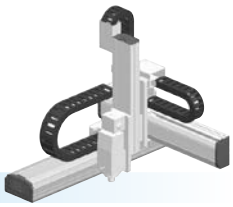

Ordering method

HXYx - C	-		-		-		- ZRH -			- RCX340-4 -							
Model	Cable	Combination	X-axis stroke	Y-axis stroke	ZR-axis	Z-axis stroke	Cable	Controller / Number of controllable axes	Safety standard	Option A (OP.A)	Option B (OP.B)	Option C (OP.C)	Option D (OP.D)	Option E (OP.E)	Absolute battery
		A1 A2 A3 A4	25 to 125cm	25 to 65cm		25 to 55cm	3L: 3.5m 5L: 5m 10L: 10m								

Specify various controller setting items. RCX340 ▶ P.636

Specification

	X-axis	Y-axis	Z-axis	R-axis
Axis construction Note 1	F20	F17	F14H-BK	R20
AC servo motor output (W)	600	400	200	200
Repeatability Note 2 (XYZ: mm)(R: °)	+/-0.01	+/-0.01	+/-0.01	+/-0.0083
Drive system	Ball screw ϕ20	Ball screw ϕ20	Ball screw ϕ15	Harmonic gear
Ball screw lead Note 3 (Deceleration ratio) (mm)	20	20	5	(1/50)
Maximum speed Note 4 (XYZ: mm/sec) (R: °/sec)	1200	1200	300	360
Moving range (XYZ: mm) (R: °)	250 to 1250	250 to 650	250 to 550	360
Robot cable length (m)	Standard: 3.5 Option: 5,10			

Note 1. Use caution that the flame machining (installation holes, tap holes) differs from single-axis robots'.
Note 2. Positioning repeatability in one direction.
Note 3. Leads not listed in the catalog are also available. Contact us for details.
Note 4. When the X-axis stroke is longer than 850mm, resonance of the ball screw may occur depending on the operation conditions (critical speed). In this case, reduce the speed setting on the program by referring to the maximum speeds shown in the table below.

Maximum payload (kg)

	Z stroke (mm)			
Y stroke (mm)	250	350	450	550
250	12	12	12	12
350	12	12	12	12
450	12	12	12	11
550	11	10	9	8
650	11	10	9	8

Controller

Controller	Operation method
RCX340	Programming / I/O point trace / Remote command / Operation using RS-232C communication

HXYx 4 axes / ZRH A1

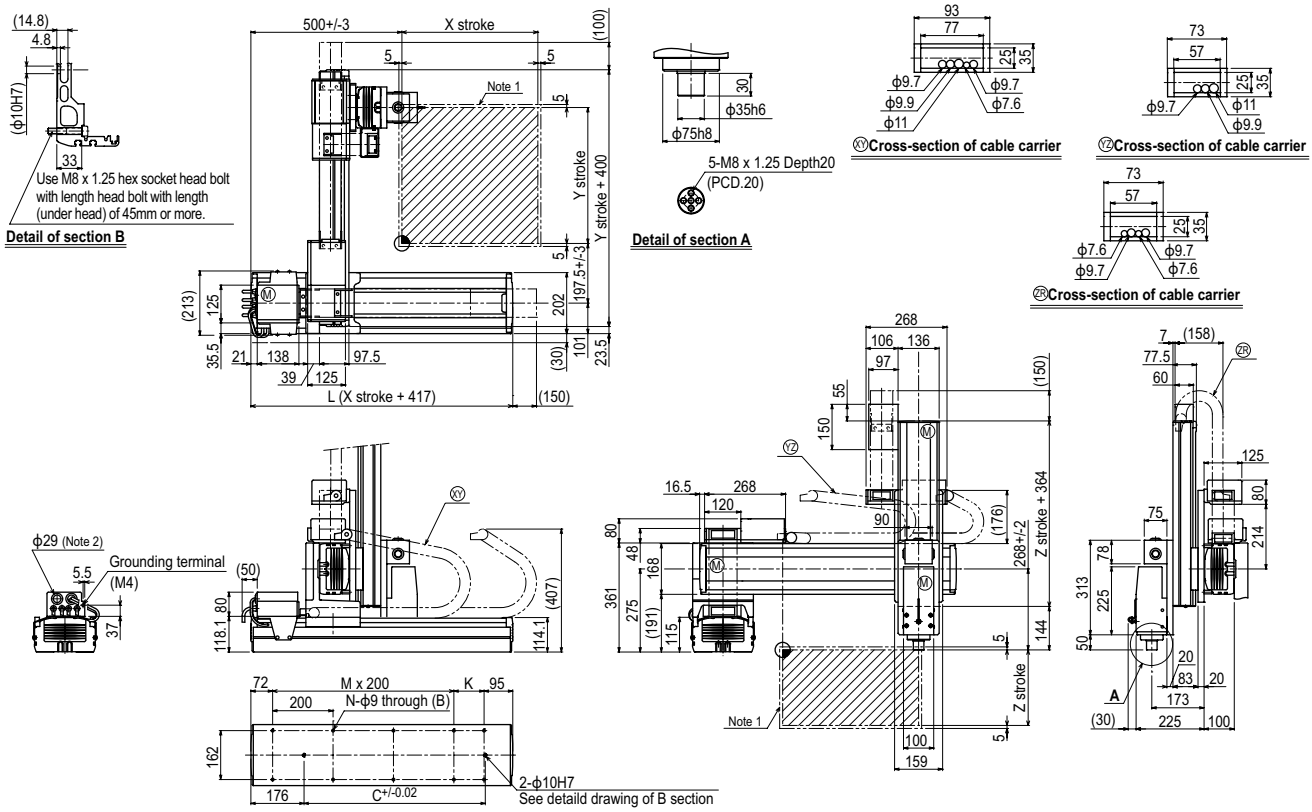

X stroke	250	350	450	550	650	750	850	950	1050	1150	1250
L	667	767	867	967	1067	1167	1267	1367	1467	1567	1667
K	100	200	100	200	100	200	100	200	100	200	100
C	420	420	600	600	780	780	960	960	1140	1320	1320
M	2	2	3	3	4	4	5	5	6	6	7
N	8	8	10	10	12	12	14	14	16	16	18

Y stroke	250	350	450	550	650

Z stroke	250	350	450	550

Maximum speed for each stroke (mm/sec) Note 3							
X-axis	1200	960	840	720	600	480
Speed setting	–	80%	70%	60%	50%	40%

Note 1. The moving range when returning to origin and the stop position when stopping by the mechanical stopper.
Note 2. User cable extraction port.

Note 3. When the X-axis stroke is longer than 850mm, resonance of the ball screw may occur depending on the operation conditions (critical speed). In this case, reduce the speed setting on the program by referring to the maximum speeds shown in the table at the left.

HXYLx 2 axes

Arm type Cable carrier

Ordering method

HXYLx - C	-		-		-		-	RCX320-2	-		-		-		-		-	
Model	Cable	Combination	X-axis stroke	Y-axis stroke	Cable	Controller / Number of controllable axes	Safety standard	Regeneratine unit	Option A (OP.A)	Option B (OP.B)	Vision System	Absolute battery
		A1 A2 A3 A4	115 to 205cm	25 to 65cm	3L: 3.5m 5L: 5m 10L: 10m			R				

Specify various controller setting items. RCX320 ▶ P.626

Specification

	X-axis	Y-axis
Axis construction Note 1	F20N	F17
AC servo motor output (W)	400	400
Repeatability Note 2 (mm)	+/-0.04	+/-0.01
Drive system	Ball screw ϕ20	Ball screw ϕ20
Ball screw lead Note 3 (Deceleration ratio) (mm)	20	20
Maximum speed (mm/sec)	1200	1200
Moving range (mm)	1150 to 2050	250 to 650
Robot cable length (m)	Standard: 3.5 Option: 5,10	

Note 1. Use caution that the flame machining (installation holes, tap holes) differs from single-axis robots'.
Note 2. Positioning repeatability in one direction.
Note 3. Leads not listed in the catalog are also available. Contact us for details.

Maximum payload (kg)

Y stroke (mm)	XY 2 axes
250	40
350	40
450	35
550	30
650	30

Controller

Controller	Operation method
RCX320-R	Programming / I/O point trace / Remote command / Operation using RS-232C communication

HXYLx 2 axes A1

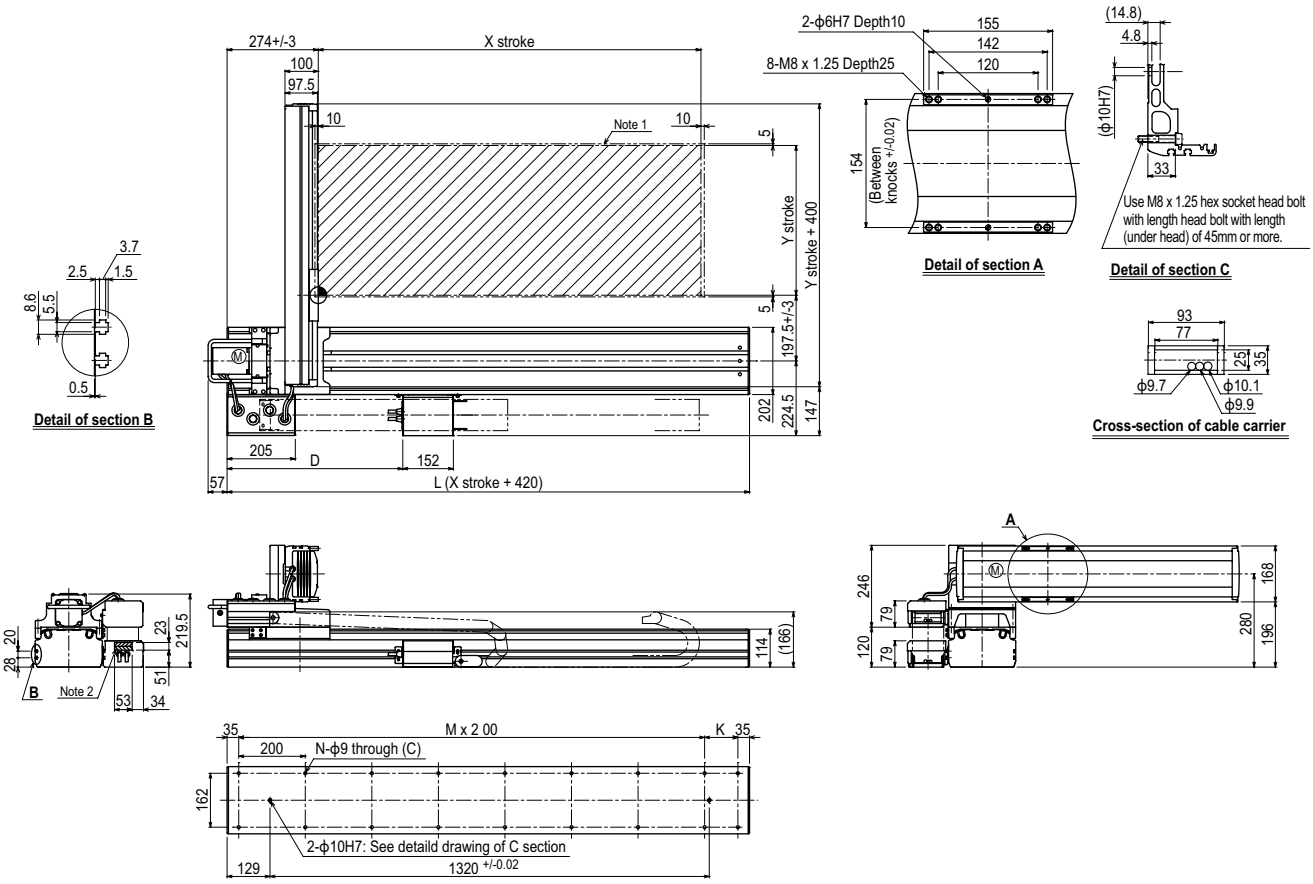

X stroke	1150	1250	1350	1450	1550	1650	1750	1850	1950	2050
L	1570	1670	1770	1870	1970	2070	2170	2270	2370	2470
D	528	574	620	666	712	758	804	850	896	942
K	100	200	100	200	100	200	100	200	100	200
M	7	7	8	8	9	9	10	10	11	11
N	18	18	20	20	22	22	24	24	26	26

Y stroke	250	350	450	550	650

Note 1. The moving range when returning to origin and the stop position when stopping by the mechanical stopper.
Note 2. The shaded position indicates an user cable extraction port.

HXYLx 2 axes A2

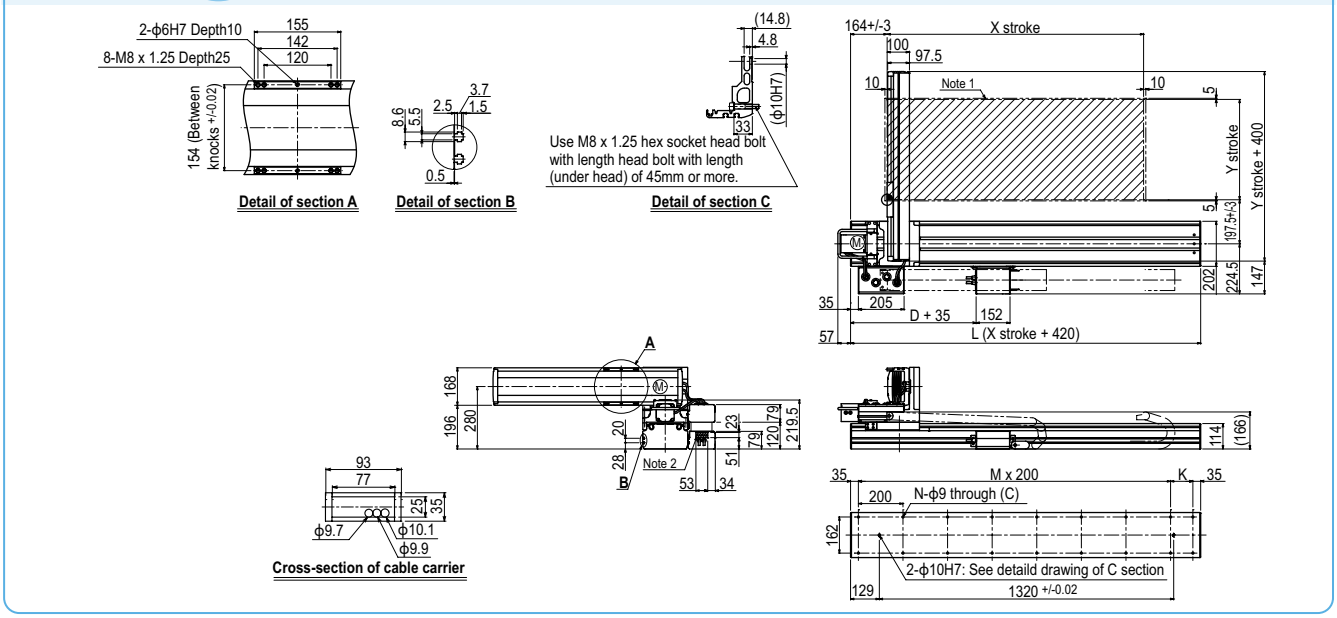

HXYLx 2 axes A3

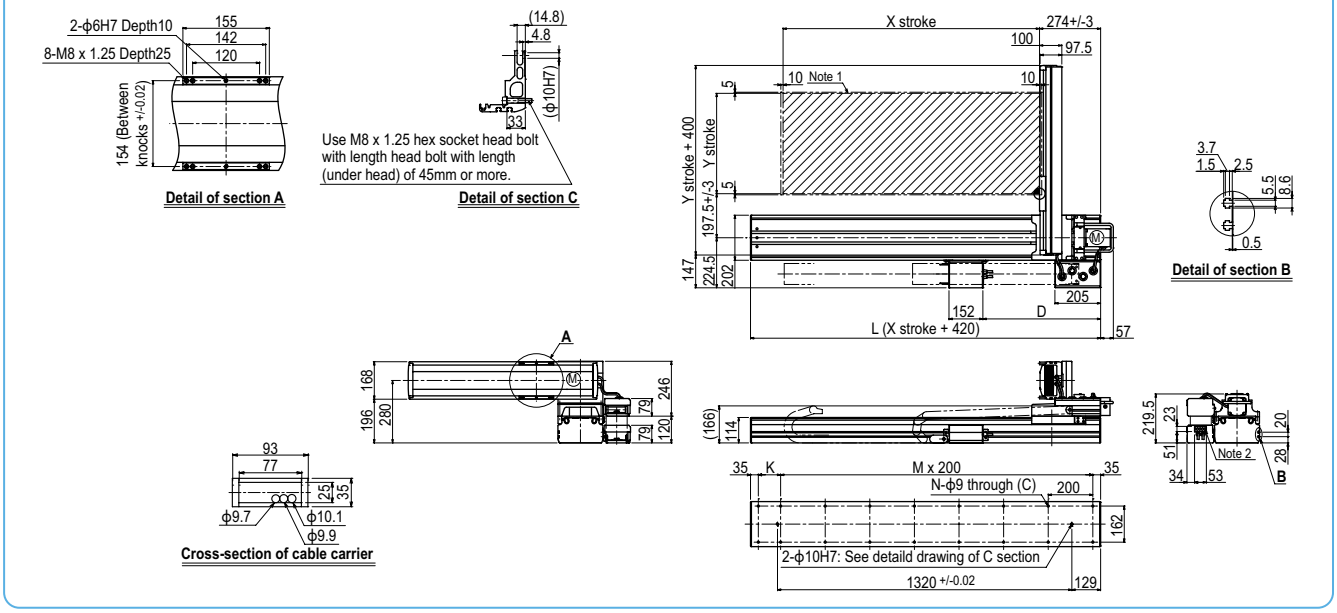

HXYLx 2 axes A4

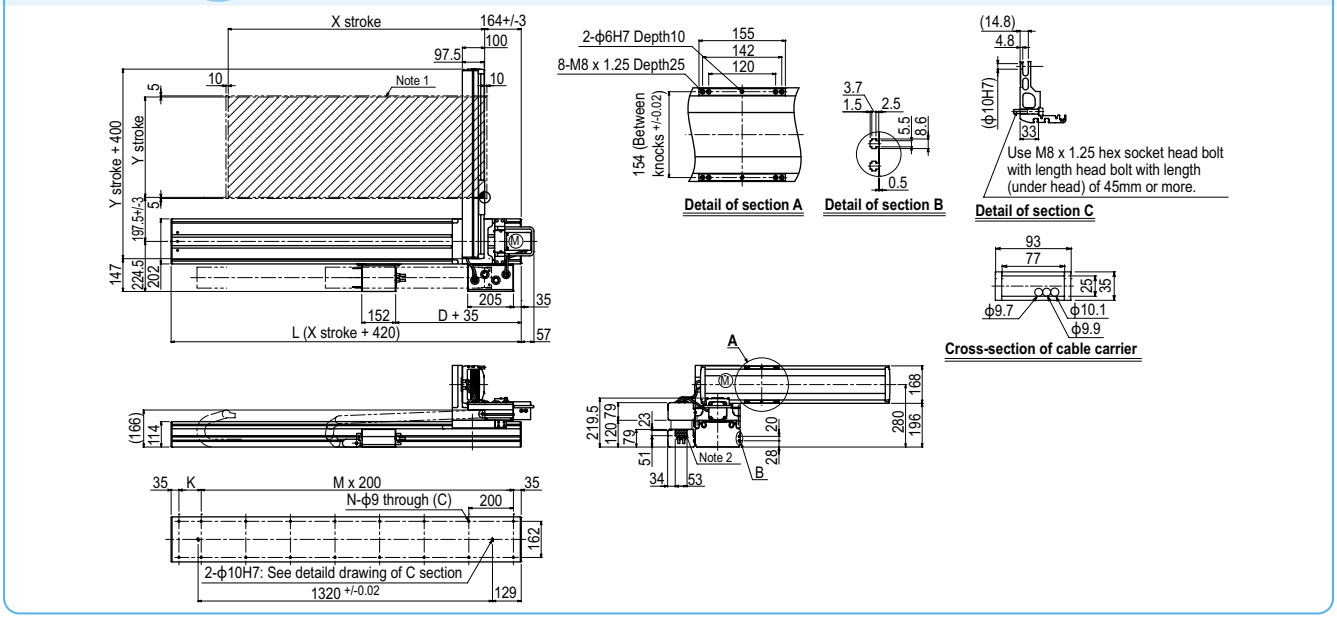

MXYx 2 axes

Gantry type | Cable carrier

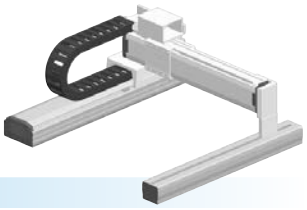

Ordering method

MXYx - C	-	[ ]	-	[ ]	-	[ ]	-	RCX320-2	-	[ ]	-	R	-	[ ]	-	[ ]	-	[ ]	-	[ ]
Model	Cable	Combination		X-axis stroke		Y-axis stroke		Cable		Controller / Number of controllable axes		Safety standard		Regeneratine unit		Option A (OP.A)		Option B (OP.B)		Vision System		Absolute battery

Combination: G1, G2, G3, G4
X-axis stroke: 25 to 125cm
Y-axis stroke: 15 to 85cm
Cable: 3L: 3.5m, 5L: 5m, 10L: 10m

Specify various controller setting items. RCX320 ▶ P.626

Specification

	X-axis	Y-axis
Axis construction Note 1	F17	F14H
AC servo motor output (W)	400	200
Repeatability Note 2 (mm)	+/-0.01	+/-0.01
Drive system	Ball screw ϕ20	Ball screw ϕ15
Ball screw lead Note 3 (Deceleration ratio) (mm)	20	20
Maximum speed Note 4 (mm/sec)	1200	1200
Moving range (mm)	250 to 1250	150 to 850
Robot cable length (m)	Standard: 3.5 Option: 5,10	

Note 1. Use caution that the flame machining (installation holes, tap holes) differs from single-axis robots'.
Note 2. Positioning repeatability in one direction.
Note 3. Leads not listed in the catalog are also available. Contact us for details.
Note 4. When the X-axis stroke is longer than 850mm (750mm for Y-axis), resonance of the ball screw may occur depending on the operation conditions (critical speed). In this case, reduce the speed setting on the program by referring to the maximum speeds shown in the table below.

Maximum payload (kg)

Y stroke (mm)	XY 2 axes
150	30
250	30
350	30
450	30
550	30
650	30
750	25
850	20

Controller

Controller	Operation method
RCX320-R	Programming / I/O point trace / Remote command / Operation using RS-232C communication

MXYx 2 axes G1

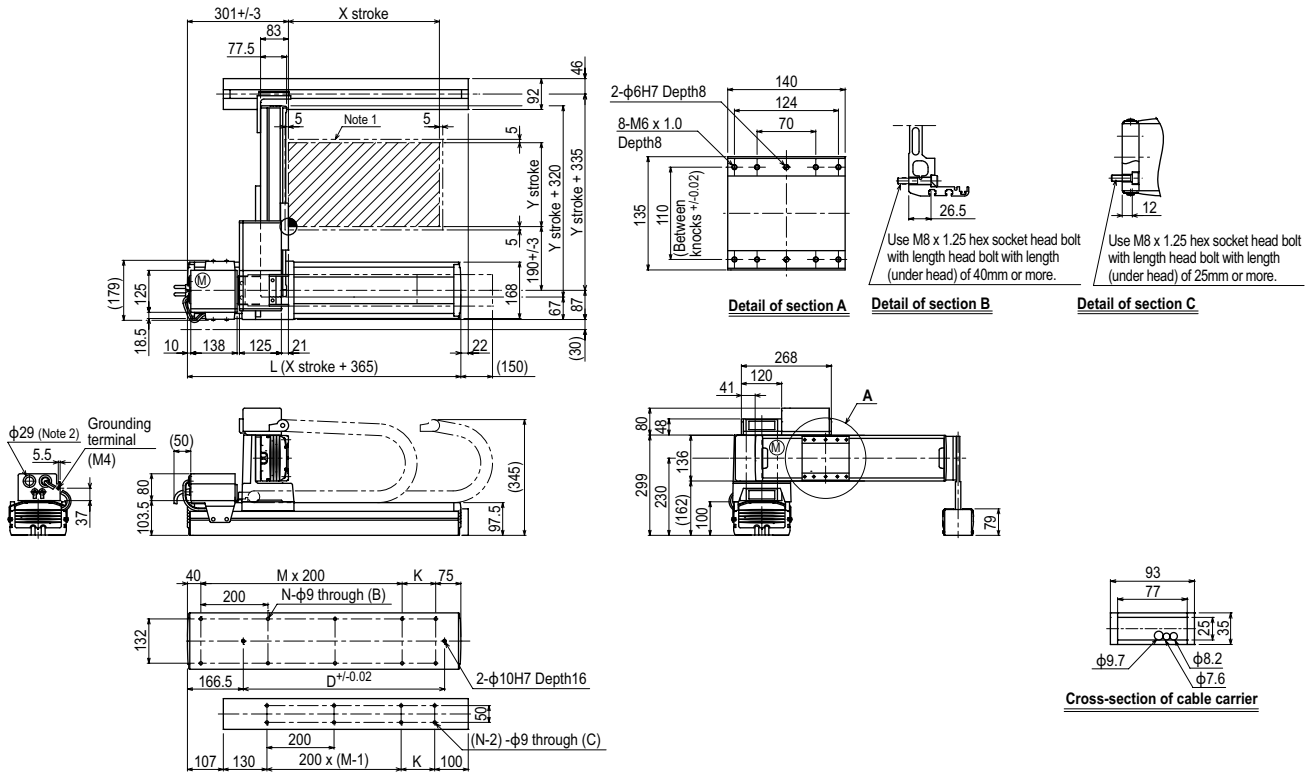

X stroke	250	350	450	550	650	750	850	950	1050	1150	1250
L	615	715	815	915	1015	1115	1215	1315	1415	1515	1615
K	100	200	100	200	100	200	100	200	100	200	100
D	240	420	600	600	780	780	960	960	1140	1140	1320
M	2	2	3	3	4	4	5	5	6	6	7
N	8	8	10	10	12	12	14	14	16	16	18

Y stroke		150	250	350	450	550	650	750	850
Maximum speed for each stroke (mm/sec) Note 3	X-axis	1200						960	840	720	600	480
	Speed setting	–						80%	70%	60%	50%	40%
	Y-axis	1200						960	780			
	Speed setting	–						80%	65%			

Note 1. The moving range when returning to origin and the stop position when stopping by the mechanical stopper.
Note 2. User cable extraction port.
Note 3. When the X-axis stroke is longer than 850mm (750mm for Y-axis), resonance of the ball screw may occur depending on the operation conditions (critical speed). In this case, reduce the speed setting on the program by referring to the maximum speeds shown in the table at the left.

MXYx 2 axes G2

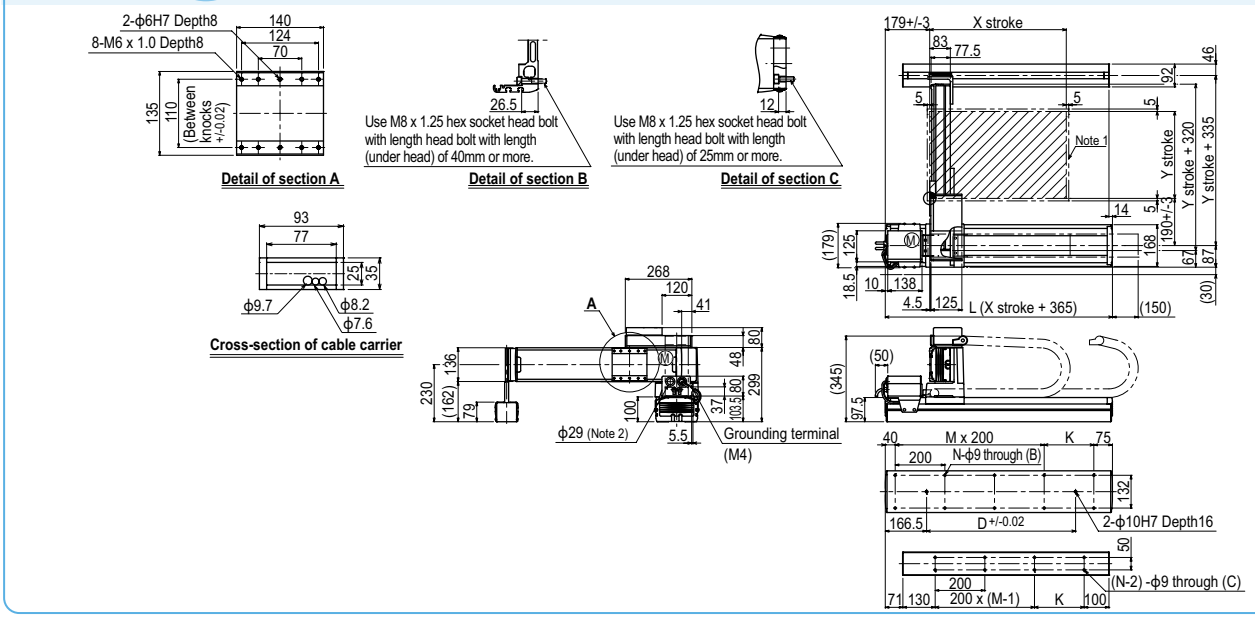

MXYx 2 axes G3

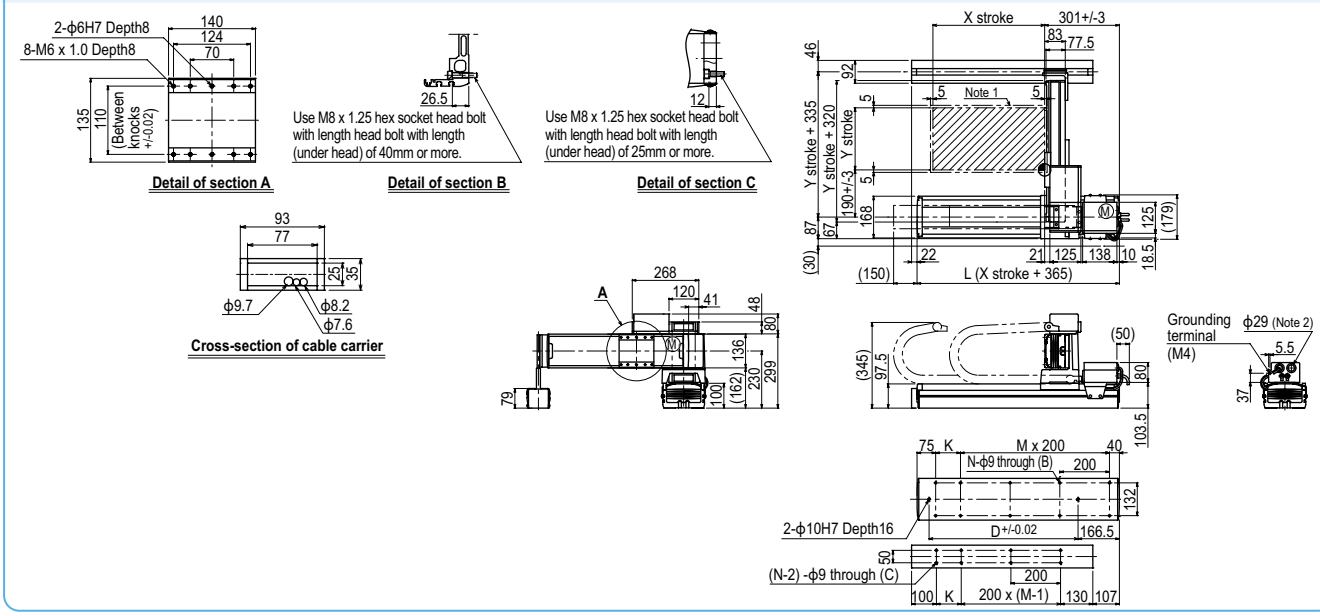

MXYx 2 axes G4

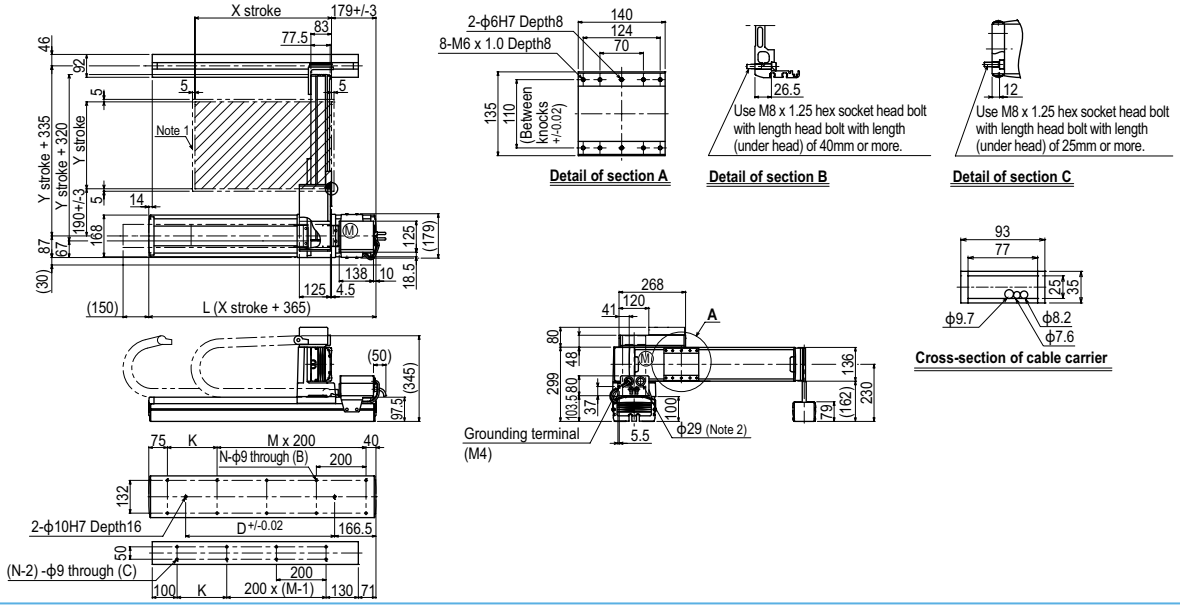

MXYx 2 axes / IO

● Gantry type ● Cable carrier ● Type with Y-axis I/O cable carrier added

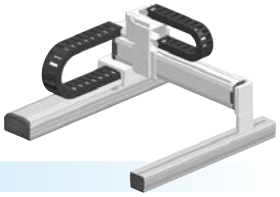

Ordering method

MXYx -	C	-	[ ]	-	[ ]	-	[ ]	- IO -	[ ]	-	RCX320-2	-	[ ]	-	R	-	[ ]	-	[ ]	-	[ ]	-	[ ]
Model	Cable		Combination		X-axis stroke		Y-axis stroke	ZR-axis	Cable		Controller / Number of controllable axes		Safety standard		Regeneratine unit		Option A (OP.A)		Option B (OP.B)		Vision System		Absolute battery

Combination: G1, G2, G3, G4
X-axis stroke: 25 to 125cm
Y-axis stroke: 15 to 85cm
Cable: 3L: 3.5m, 5L: 5m, 10L: 10m

Specify various controller setting items. RCX320 ▶ P.626

Specification

	X-axis	Y-axis
Axis construction Note 1	F17	F14H
AC servo motor output (W)	400	200
Repeatability Note 2 (mm)	+/-0.01	+/-0.01
Drive system	Ball screw ϕ20	Ball screw ϕ15
Ball screw lead Note 3 (Deceleration ratio) (mm)	20	20
Maximum speed Note 4 (mm/sec)	1200	1200
Moving range (mm)	250 to 1250	150 to 850
Robot cable length (m)	Standard: 3.5 Option: 5,10	

Note 1.Use caution that the flame machining (installation holes, tap holes) differs from single-axis robots'.
Note 2.Positioning repeatability in one direction.
Note 3. Leads not listed in the catalog are also available. Contact us for details.
Note 4. When the X-axis stroke is longer than 850mm (750mm for Y-axis), resonance of the ball screw may occur depending on the operation conditions (critical speed). In this case, reduce the speed setting on the program by referring to the maximum speeds shown in the table below.

Maximum payload (kg)

Y stroke (mm)	XY 2 axes
150	29
250	29
350	29
450	29
550	29
650	29
750	24
850	19

Controller

Controller	Operation method
RCX320-R	Programming / I/O point trace / Remote command / Operation using RS-232C communication

MXYx 2 axes / IO G1

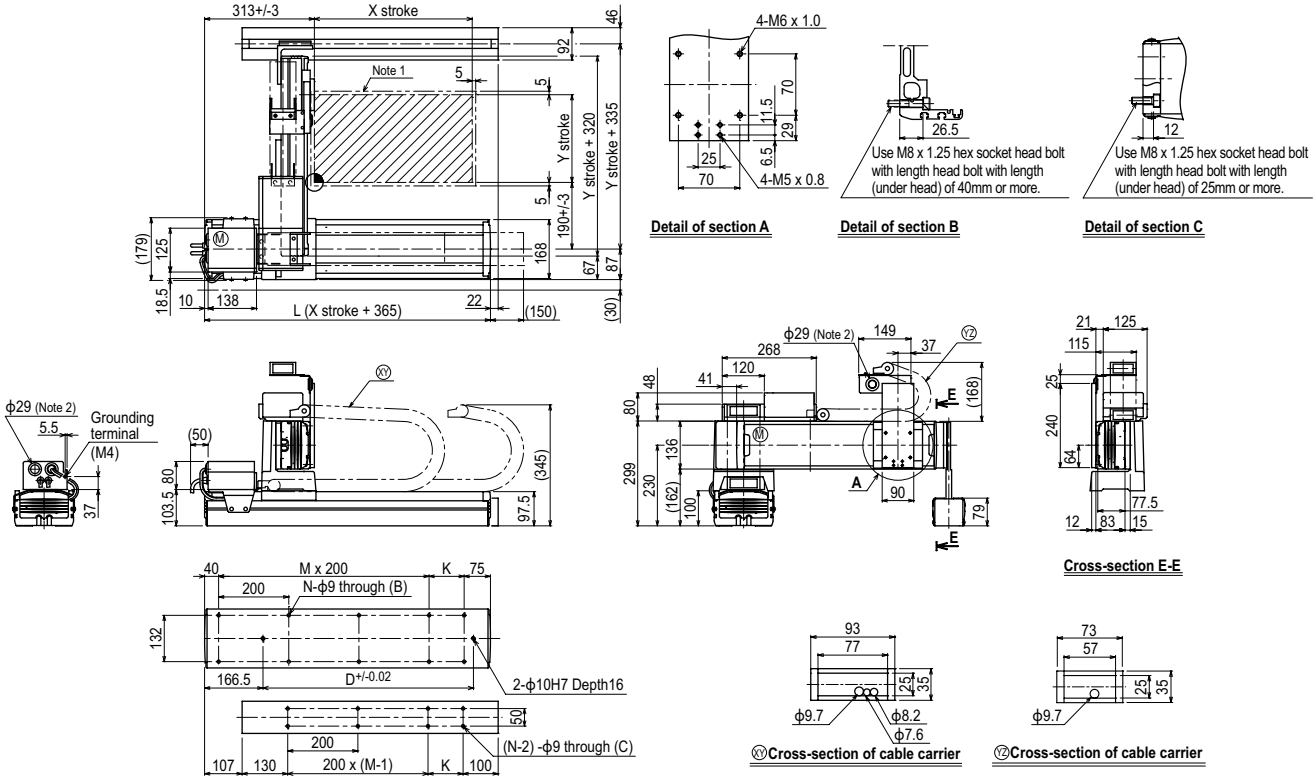

X stroke	250	350	450	550	650	750	850	950	1050	1150	1250
L	615	715	815	915	1015	1115	1215	1315	1415	1515	1615
K	100	200	100	200	100	200	100	200	100	200	100
D	240	420	600	600	780	780	960	960	1140	1140	1320
M	2	2	3	3	4	4	5	5	6	6	7
N	8	8	10	10	12	12	14	14	16	16	18

Y stroke	150	250	350	450	550	650	750	850

Maximum speed for each stroke (mm/sec) Note 3								
X-axis	1200					960	840	720	600	480
Speed setting	–					80%	70%	60%	50%	40%
Y-axis	1200					960	780			
Speed setting	–					80%	65%			

Note 1. The moving range when returning to origin and the stop position when stopping by the mechanical stopper.
Note 2. User cable extraction port.
Note 3. When the X-axis stroke is longer than 850mm (750mm for Y-axis), resonance of the ball screw may occur depending on the operation conditions (critical speed). In this case, reduce the speed setting on the program by referring to the maximum speeds shown in the table at the left.

MXYx 3 axes / ZFL20/10

Gantry type | Cable carrier | Z-axis: clamped base / moving table type (200W)

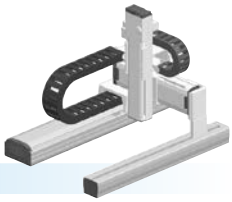

Ordering method

MXYx - C - [ ] - [ ] - [ ] - [ ] - [ ] - [ ] - **RCX340-3** - [ ] - [ ] - [ ] - [ ] - [ ] - [ ] - [ ]

Model	Cable	Combination	X-axis stroke	Y-axis stroke	ZR-axis	Z-axis stroke	Cable	Controller / Number of controllable axes	Safety standard	Option A (OP.A)	Option B (OP.B)	Option C (OP.C)	Option D (OP.D)	Option E (OP.E)	Absolute battery
		G1 G2 G3 G4	25 to 125cm	15 to 85cm	ZFL20 ZFL10	15 to 35cm	3L: 3.5m 5L: 5m 10L: 10m								

Specify various controller setting items. RCX340 ▶ P636

Specification

	X-axis	Y-axis	Z-axis: ZFL20	Z-axis: ZFL10
Axis construction Note 1	F17	F14H-BK	F10H-BK	
AC servo motor output (W)	400	200	200	
Repeatability Note 2 (mm)	+/-0.01	+/-0.01	+/-0.01	
Drive system	Ball screw ϕ20	Ball screw ϕ15	Ball screw ϕ15	
Ball screw lead Note 3 (Deceleration ratio) (mm)	20	20	20	10
Maximum speed Note 4 (mm/sec)	1200	1200	1200	600
Moving range (mm)	250 to 1250	150 to 850	150 to 350	
Robot cable length (m)	Standard: 3.5 Option: 5,10			

Note. The standard types are ZFL with higher rigidity as compared with ZF types which are conventional standard types. When you need the ZF type, please consult YAMAHA.
Note 1. Use caution that the flame machining (installation holes, tap holes) differs from single-axis robots'.
Note 2. Positioning repeatability in one direction.
Note 3. Leads not listed in the catalog are also available. Contact us for details.
Note 4. When the X-axis stroke is longer than 850mm (750mm for Y-axis), resonance of the ball screw may occur depending on the operation conditions (critical speed). In this case, reduce the speed setting on the program by referring to the maximum speeds shown in the table below.

Maximum payload (kg)

	Z stroke (mm)					
	ZFL20			ZFL10		
Y stroke (mm)	150	250	350	150	250	350
150	8	8	8	15	15	15
250	8	8	8	15	15	15
350	8	8	8	15	15	15
450	8	8	8	15	15	15
550	8	8	8	15	15	15
650	8	8	8	15	15	15
750	8	8	8	15	15	15
850	8	8	8	12	11	10

Controller

Controller	Operation method
RCX340	Programming / I/O point trace / Remote command / Operation using RS-232C communication

MXYx 3 axes / ZFL20/10 G1

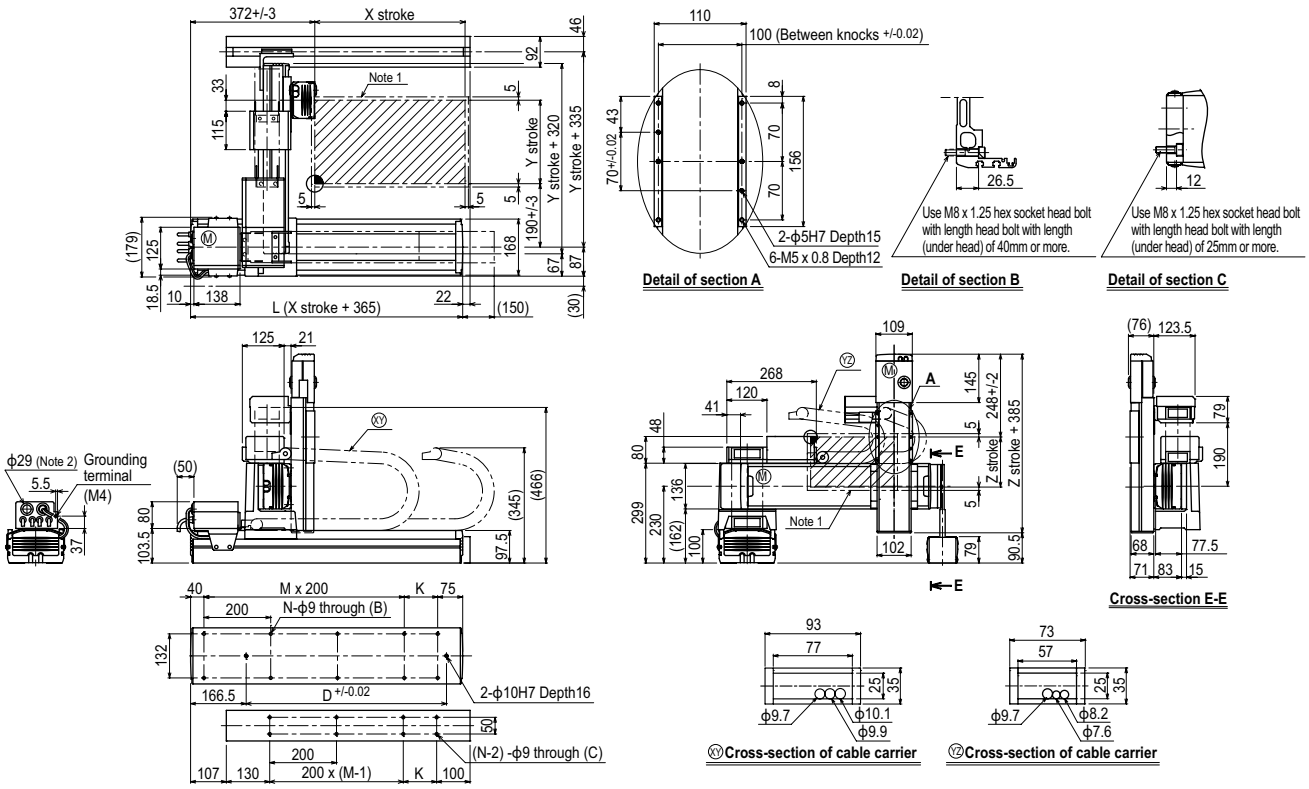

X stroke	250	350	450	550	650	750	850	950	1050	1150	1250
L	615	715	815	915	1015	1115	1215	1315	1415	1515	1615
K	100	200	100	200	100	200	100	200	100	200	100
D	240	420	600	600	780	780	960	960	1140	1140	1320
M	2	2	3	3	4	4	5	5	6	6	7
N	8	8	10	10	12	12	14	14	16	16	18

Y stroke	150	250	350	450	550	650	750	850
Z stroke	150	250	350					

Maximum speed for each stroke (mm/sec) Note 3								
X-axis	1200			960	840	720	600	480
Speed setting	–			80%	70%	60%	50%	40%
Y-axis	1200			960	780			
Speed setting	–			80%	65%			

Note 1. The moving range when returning to origin and the stop position when stopping by the mechanical stopper.
Note 2. User cable extraction port.
Note 3. When the X-axis stroke is longer than 850mm (750mm for Y-axis), resonance of the ball screw may occur depending on the operation conditions (critical speed). In this case, reduce the speed setting on the program by referring to the maximum speeds shown in the table at the left.

Controller RCX340 ▶ 636

MXYx 3 axes / ZFH

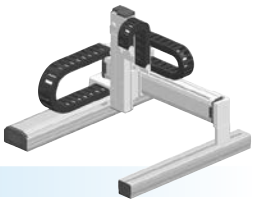

Gantry type | Cable carrier | Z-axis: clamped table / moving base type (200W)

Ordering method

MXYx -	C	-		-		-	ZFH	-		-	RCX340-3	-		-		-		-		-		-	
Model	Cable	Combination	X-axis stroke	Y-axis stroke	ZR-axis	Z-axis stroke	Cable	Controller / Number of controllable axes	Safety standard	Option A (OP.A)	Option B (OP.B)	Option C (OP.C)	Option D (OP.D)	Option E (OP.E)	Absolute battery
		G1 G2 G3 G4	25 to 125cm	15 to 85cm		15 to 35cm	3L: 3.5m 5L: 5m 10L: 10m								

Specify various controller setting items. RCX340 ▶ P636

Specification

	X-axis	Y-axis	Z-axis
Axis construction Note 1	F17	F14H	F10H-BK
AC servo motor output (W)	400	200	200
Repeatability Note 2 (mm)	+/-0.01	+/-0.01	+/-0.01
Drive system	Ball screw ϕ20	Ball screw ϕ15	Ball screw ϕ15
Ball screw lead Note 3 (Deceleration ratio) (mm)	20	20	10
Maximum speed Note 4 (mm/sec)	1200	1200	600
Moving range (mm)	250 to 1250	150 to 850	150 to 350
Robot cable length (m)	Standard: 3.5 Option: 5,10		

Note. The standard types are ZFH with higher rigidity as compared with ZF types which are conventional standard types. When you need the ZF type, please consult YAMAHA.
Note 1. Use caution that the flame machining (installation holes, tap holes) differs from single-axis robots'.
Note 2. Positioning repeatability in one direction.
Note 3. Leads not listed in the catalog are also available. Contact us for details.
Note 4. When the X-axis stroke is longer than 850mm (750mm for Y-axis), resonance of the ball screw may occur depending on the operation conditions (critical speed). In this case, reduce the speed setting on the program by referring to the maximum speeds shown in the table below.

Maximum payload (kg)

	Z stroke (mm)		
Y stroke (mm)	150	250	350
150	14	13	12
250	14	13	12
350	14	13	12
450	14	13	12
550	14	13	12
650	14	13	12
750	14	13	12
850	12	11	10

Controller

Controller	Operation method
RCX340	Programming / I/O point trace / Remote command / Operation using RS-232C communication

MXYx 3 axes / ZFH G1

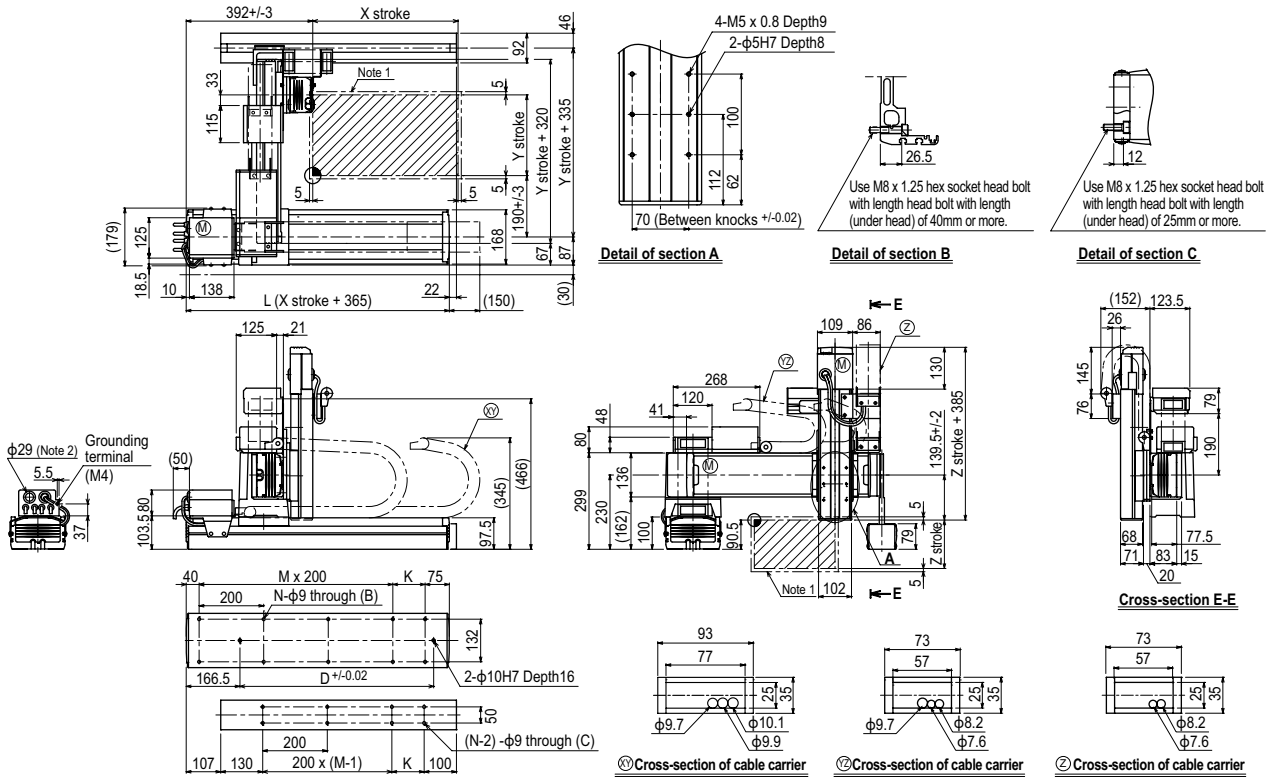

X stroke	250	350	450	550	650	750	850	950	1050	1150	1250
L	615	715	815	915	1015	1115	1215	1315	1415	1515	1615
K	100	200	100	200	100	200	100	200	100	200	100
D	240	420	600	600	780	780	960	960	1140	1140	1320
M	2	2	3	3	4	4	5	5	6	6	7
N	8	8	10	10	12	12	14	14	16	16	18

Y stroke	150	250	350	450	550	650	750	850

Z stroke	150	250	350

Maximum speed for each stroke (mm/sec) Note 3								
	X-axis	1200		960	840	720	600	480
	Speed setting	–		80%	70%	60%	50%	40%
	Y-axis	1200		960	780			
	Speed setting	–		80%	65%			

Note 1. The moving range when returning to origin and the stop position when stopping by the mechanical stopper.
Note 2. User cable extraction port.
Note 3. When the X-axis stroke is longer than 850mm (750mm for Y-axis), resonance of the ball screw may occur depending on the operation conditions (critical speed). In this case, reduce the speed setting on the program by referring to the maximum speeds shown in the table at the left.

MXYx 4 axes / ZRFL20/10

Gantry type | Cable carrier | Z-axis: clamped base / moving table type (200W)+R-axis

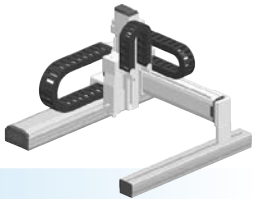

Ordering method

MXYx- C	-		-		-		-		-		-	RCX340-4	-		-		-		-		-		-	
Model	-	Cable	-	Combination	-	X-axis stroke	-	Y-axis stroke	-	ZR-axis	-	Z-axis stroke	-	Cable	-	Controller / Number of controllable axes	-	Safety standard	-	Option A (OP.A)	-	Option B (OP.B)	-	Option C (OP.C)	-	Option D (OP.D)	-	Option E (OP.E)	-	Absolute battery

Combination	X-axis stroke	Y-axis stroke	ZR-axis	Z-axis stroke	Cable
G1 G2 G3 G4	25 to 125cm	15 to 85cm	ZRFL20 ZRFL10	15 to 35cm	3L: 3.5m 5L: 5m 10L: 10m

Specify various controller setting items. RCX340 ▶ P636

Specification

	X-axis	Y-axis	Z-axis: ZRFL20	Z-axis: ZRFL10	R-axis
Axis construction Note 1	F17	F14H	F10H-BK		R5
AC servo motor output (W)	400	200	200		50
Repeatability Note 2 (XYZ: mm)(R: °)	+/-0.01	+/-0.01	+/-0.01		+/-0.0083
Drive system	Ball screw ϕ20	Ball screw ϕ15	Ball screw ϕ15		Harmonic gear
Ball screw lead Note 3 (Deceleration ratio) (mm)	20	20	20	10	(1/50)
Maximum speed Note 4 (XYZ: mm/sec) (R: °/sec)	1200	1200	1200	600	360
Moving range (XYZ: mm)(R: °)	250 to 1250	150 to 850	150 to 350		360
Robot cable length (m)	Standard: 3.5 Option: 5,10				

Note. The standard types are ZRFL with higher rigidity as compared with ZRF types which are conventional standard types. When you need the ZRF type, please consult YAMAHA.
Note 1. Use caution that the flame machining (installation holes, tap holes) differs from single-axis robots'.
Note 2. Positioning repeatability in one direction.
Note 3. Leads not listed in the catalog are also available. Contact us for details.
Note 4. When the X-axis stroke is longer than 850mm (750mm for Y-axis), resonance of the ball screw may occur depending on the operation conditions (critical speed). In this case, reduce the speed setting on the program by referring to the maximum speeds shown in the table below.

Maximum payload (kg)

	Z stroke (mm)					
	ZRFL20			ZRFL10		
Y stroke (mm)	150	250	350	150	250	350
150	4	4	4	11	11	11
250	4	4	4	11	11	11
350	4	4	4	11	11	11
450	4	4	4	11	11	11
550	4	4	4	11	11	11
650	4	4	4	11	11	11
750	4	4	4	11	11	11
850	4	4	4	8	7	6

Controller

Controller	Operation method
RCX340	Programming / I/O point trace / Remote command / Operation using RS-232C communication

MXYx 4 axes / ZRFL20/10 G1

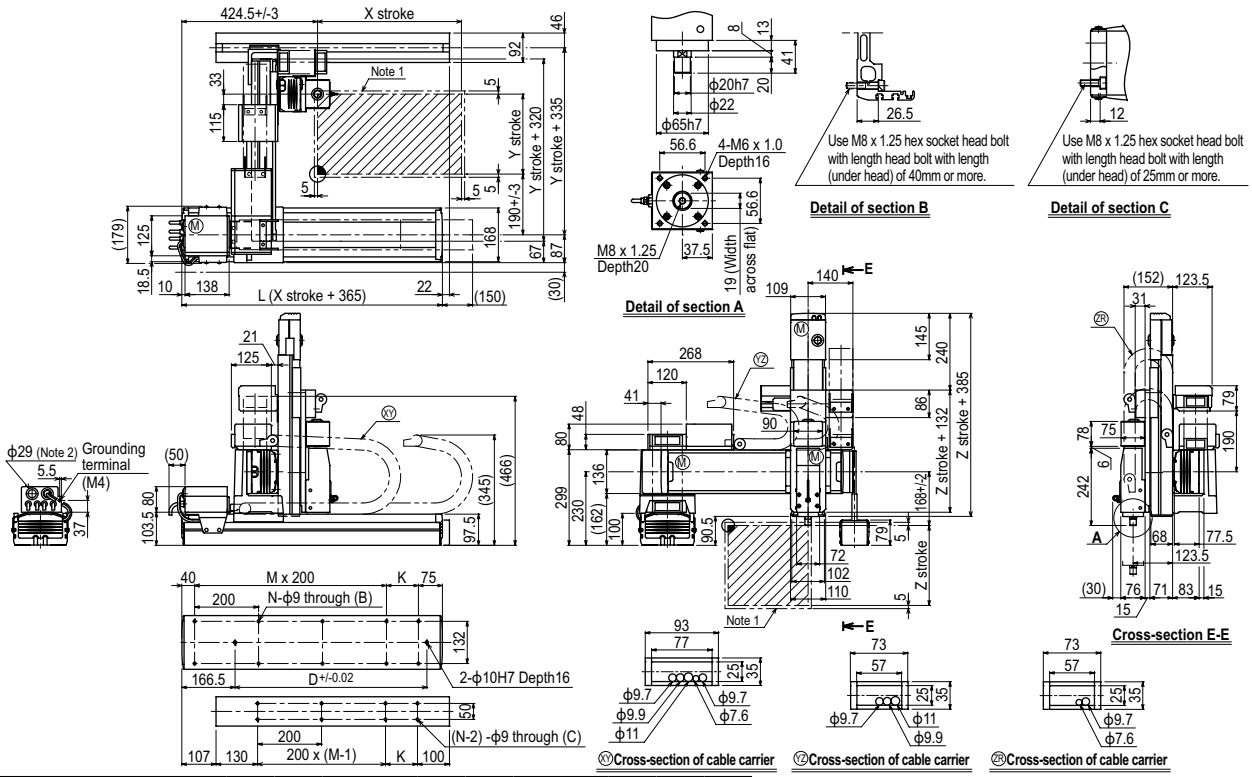

X stroke	250	350	450	550	650	750	850	950	1050	1150	1250
L	615	715	815	915	1015	1115	1215	1315	1415	1515	1615
K	100	200	100	200	100	200	100	200	100	200	100
D	240	420	600	600	780	780	960	960	1140	1140	1320
M	2	2	3	3	4	4	5	5	6	6	7
N	8	8	10	10	12	12	14	14	16	16	18

Y stroke	150	250	350	450	550	650	750	850

Z stroke	150	250	350

Maximum speed for each stroke (mm/sec) Note 3								
	X-axis	1200			960	840	720	600	480
	Speed setting	–			80%	70%	60%	50%	40%
	Y-axis	1200			960	780			
	Speed setting	–			80%	65%			

Note 1. The moving range when returning to origin and the stop position when stopping by the mechanical stopper.
Note 2. User cable extraction port.
Note 3. When the X-axis stroke is longer than 850mm (750mm for Y-axis), resonance of the ball screw may occur depending on the operation conditions (critical speed). In this case, reduce the speed setting on the program by referring to the maximum speeds shown in the table at the left.

Controller RCX340 ▶ 636

MXYx 4 axes / ZRFH

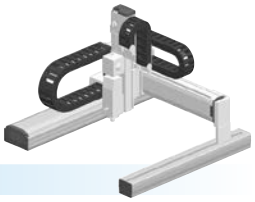

Gantry type | Cable carrier | Z-axis: clamped table / moving base type (200W)+R-axis

Ordering method

MXYx - C	-		-		-	ZRFH	-		-	RCX340-4	-		-		-		-		-	
Model	Cable	Combination	X-axis stroke	Y-axis stroke	ZR-axis	Z-axis stroke	Cable	Controller / Number of controllable axes	Safety standard	Option A (OP.A)	Option B (OP.B)	Option C (OP.C)	Option D (OP.D)	Option E (OP.E)	Absolute battery
		G1 G2 G3 G4	25 to 125cm	15 to 85cm		15 to 35cm	3L: 3.5m 5L: 5m 10L: 10m								

Specify various controller setting items. RCX340 ▶ P636

Specification

	X-axis	Y-axis	Z-axis	R-axis
Axis construction Note 1	F17	F14H	F10H-BK	R5
AC servo motor output (W)	400	200	200	50
Repeatability Note 2 (XYZ: mm) (R: °)	+/-0.01	+/-0.01	+/-0.01	+/-0.0083
Drive system	Ball screw ϕ20	Ball screw ϕ15	Ball screw ϕ15	Harmonic gear
Ball screw lead Note 3 (Deceleration ratio) (mm)	20	20	10	(1/50)
Maximum speed Note 4 (XYZ: mm/sec) (R: °/sec)	1200	1200	600	360
Moving range (XYZ: mm) (R: °)	250 to 1250	150 to 850	150 to 350	360
Robot cable length (m)	Standard: 3.5 Option: 5,10			

Note. The standard types are ZRFH with higher rigidity as compared with ZRF types which are conventional standard types. When you need the ZRF type, please consult YAMAHA.
Note 1. Use caution that the flame machining (installation holes, tap holes) differs from single-axis robots'.
Note 2. Positioning repeatability in one direction.
Note 3. Leads not listed in the catalog are also available. Contact us for details.
Note 4. When the X-axis stroke is longer than 850mm (750mm for Y-axis), resonance of the ball screw may occur depending on the operation conditions (critical speed). In this case, reduce the speed setting on the program by referring to the maximum speeds shown in the table below.

Maximum payload (kg)

	Z stroke (mm)		
Y stroke (mm)	150	250	350
150	10	9	8
250	10	9	8
350	10	9	8
450	10	9	8
550	10	9	8
650	10	9	8
750	10	9	8
850	8	7	6

Controller

Controller	Operation method
RCX340	Programming / I/O point trace / Remote command / Operation using RS-232C communication

MXYx 4 axes / ZRFH G1

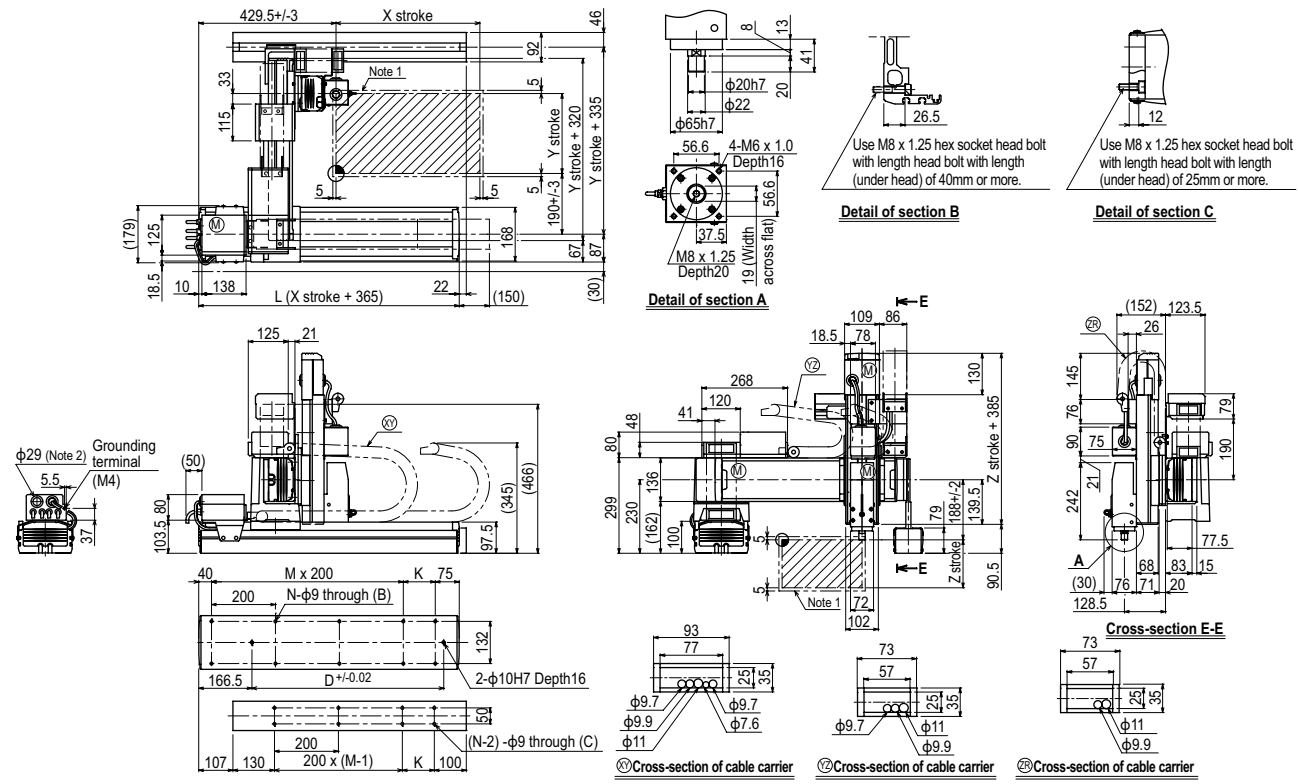

X stroke	250	350	450	550	650	750	850	950	1050	1150	1250
L	615	715	815	915	1015	1115	1215	1315	1415	1515	1615
K	100	200	100	200	100	200	100	200	100	200	100
D	240	420	600	600	780	780	960	960	1140	1140	1320
M	2	2	3	3	4	4	5	5	6	6	7
N	8	8	10	10	12	12	14	14	16	16	18

Y stroke	150	250	350	450	550	650	750	850

Z stroke	150	250	350

Maximum speed for each stroke (mm/sec) Note 3								
	X-axis	1200		960	840	720	600	480
	Speed setting	–		80%	70%	60%	50%	40%
	Y-axis	1200		960	780			
	Speed setting	–		80%	65%			

Note 1. The moving range when returning to origin and the stop position when stopping by the mechanical stopper.
Note 2. User cable extraction port.
Note 3. When the X-axis stroke is longer than 850mm (750mm for Y-axis), resonance of the ball screw may occur depending on the operation conditions (critical speed). In this case, reduce the speed setting on the program by referring to the maximum speeds shown in the table at the left.

MEMO

HXYx 2 axes

Gantry type | Cable carrier

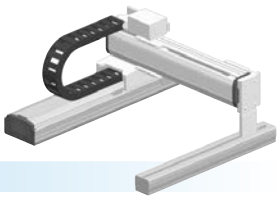

Ordering method

HXYx - C	-		-		-		-	RCX320-2	-		-		-		-		-	
Model	Cable	Combination	X-axis stroke	Y-axis stroke	Cable	Controller / Number of controllable axes	Safety standard	Regeneratine unit	Option A (OP.A)	Option B (OP.B)	Vision System	Absolute battery
		G1 G2 G3 G4	25 to 125cm	25 to 105cm	3L: 3.5m 5L: 5m 10L: 10m			R				

Specify various controller setting items. RCX320 ▶ P.626

Specification

	X-axis	Y-axis
Axis construction Note 1	F20	F17
AC servo motor output (W)	600	400
Repeatability Note 2 (mm)	+/-0.01	+/-0.01
Drive system	Ball screw ϕ20	Ball screw ϕ20
Ball screw lead Note 3 (Deceleration ratio) (mm)	20	20
Maximum speed Note 4 (mm/sec)	1200	1200
Moving range (mm)	250 to 1250	250 to 1050
Robot cable length (m)	Standard: 3.5 Option: 5,10	

Note 1.Use caution that the flame machining (installation holes, tap holes) differs from single-axis robots'.
Note 2.Positioning repeatability in one direction.
Note 3. Leads not listed in the catalog are also available. Contact us for details.
Note 4.When the X-axis/Y-axis stroke is longer than 850mm, resonance of the ball screw may occur depending on the operation conditions (critical speed). In this case, reduce the speed setting on the program by referring to the maximum speeds shown in the table below.

Maximum payload (kg)

Y stroke (mm)	XY 2 axes
250 to 1050	50

Controller

Controller	Operation method
RCX320-R	Programming / I/O point trace / Remote command / Operation using RS-232C communication

HXYx 2 axes G1

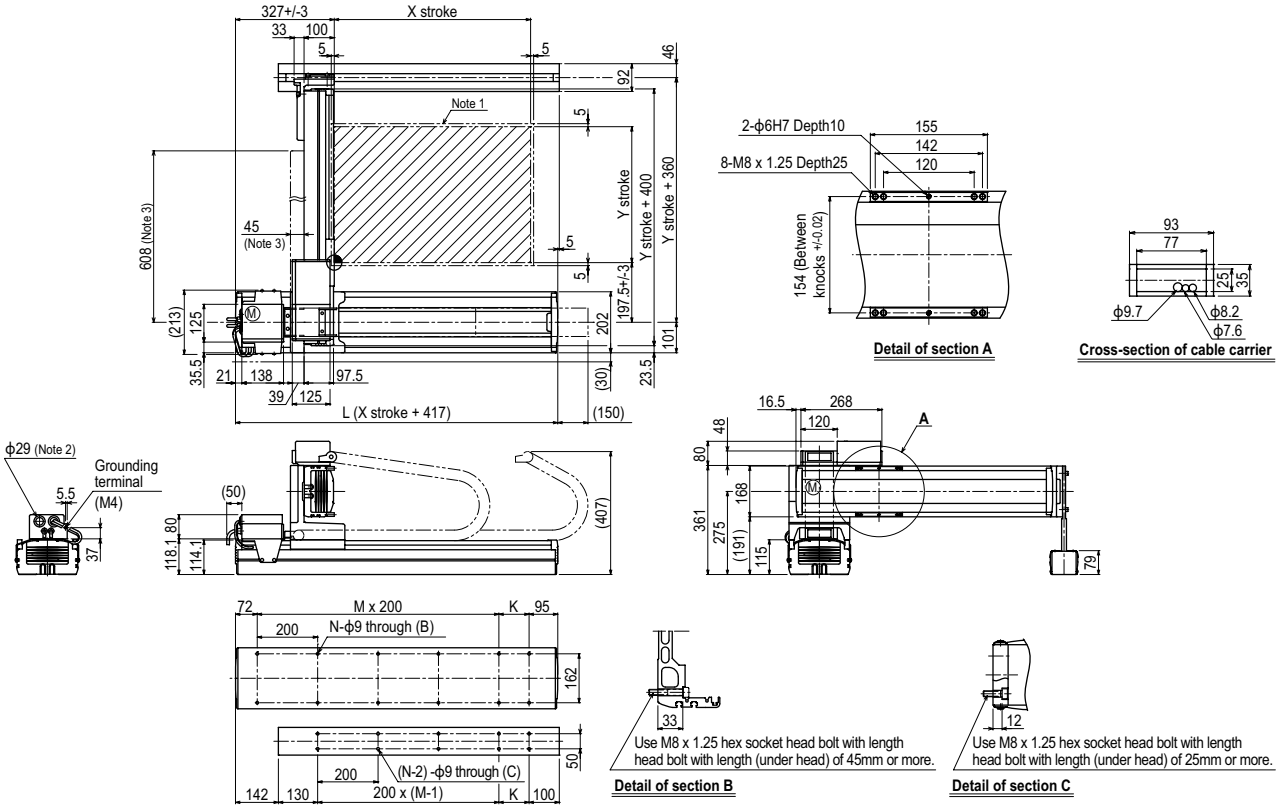

X stroke	250	350	450	550	650	750	850	950	1050	1150	1250
L	667	767	867	967	1067	1167	1267	1367	1467	1567	1667
K	100	200	100	200	100	200	100	200	100	200	100
F	420	420	600	600	780	780	960	960	1140	1320	1320
M	2	2	3	3	4	4	5	5	6	6	7
N	8	8	10	10	12	12	14	14	16	16	18

Y stroke	250	350	450	550	650	750	850	950	1050
Maximum speed for each stroke (mm/sec) Note 4 — X-axis	1200						960	840	720	600	480
Maximum speed for each stroke (mm/sec) Note 4 — Y-axis	1200						960	840	720		
Maximum speed for each stroke (mm/sec) Note 4 — Speed setting	–						80%	70%	60%	50%	40%

Note 1. The moving range when returning to origin and the stop position when stopping by the mechanical stopper.
Note 2. User cable extraction port.
Note 3. Dimension of reinforced bracket (To be installed when the Y stroke is 750mm or longer)

Note 4.When the X-axis/Y-axis stroke is longer than 850mm, resonance of the ball screw may occur depending on the operation conditions (critical speed). In this case, reduce the speed setting on the program by referring to the maximum speeds shown in the table at the left.

Controller RCX320 ▶ 626

HXYx 2 axes G2

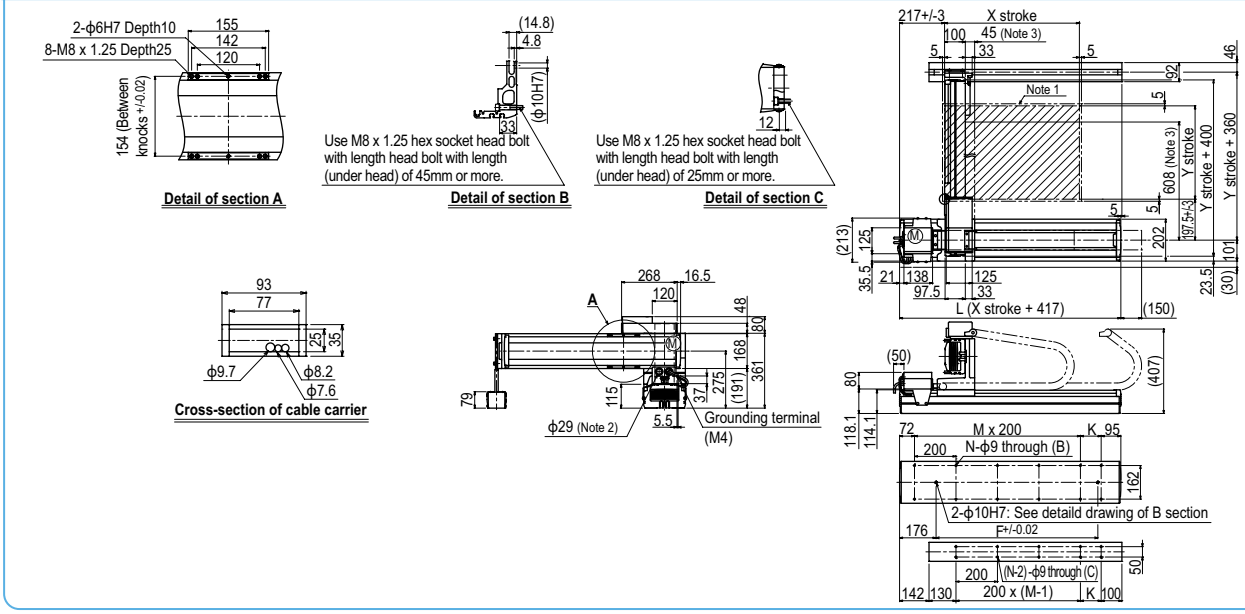

HXYx 2 axes G3

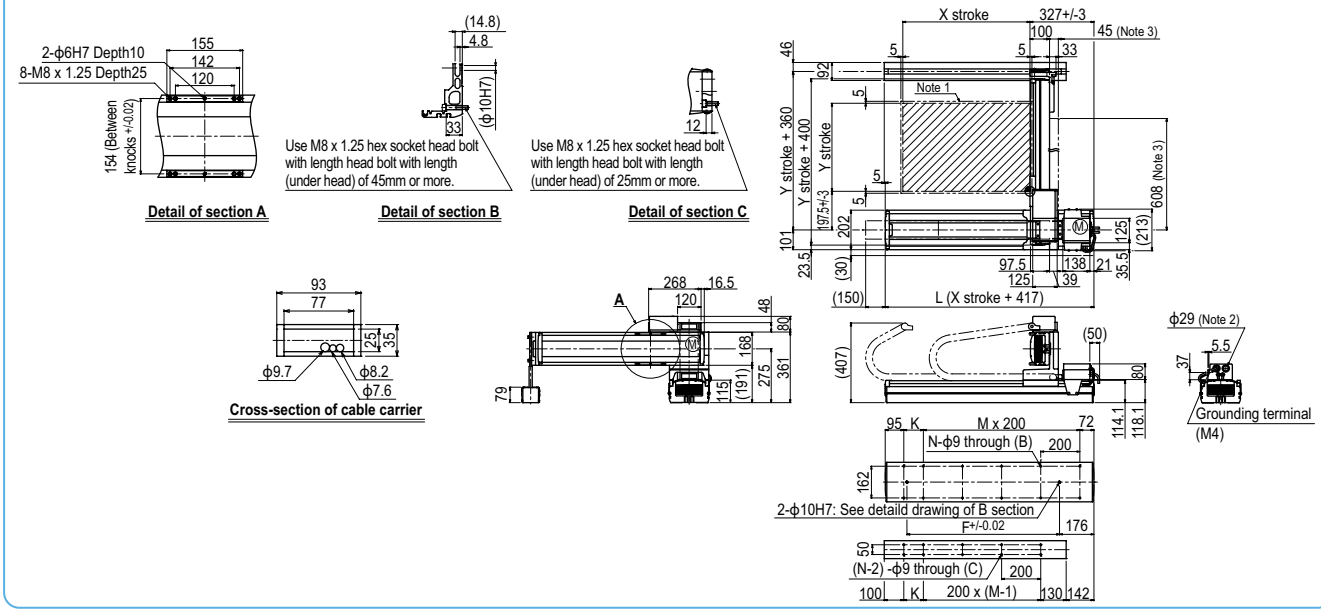

HXYx 2 axes G4

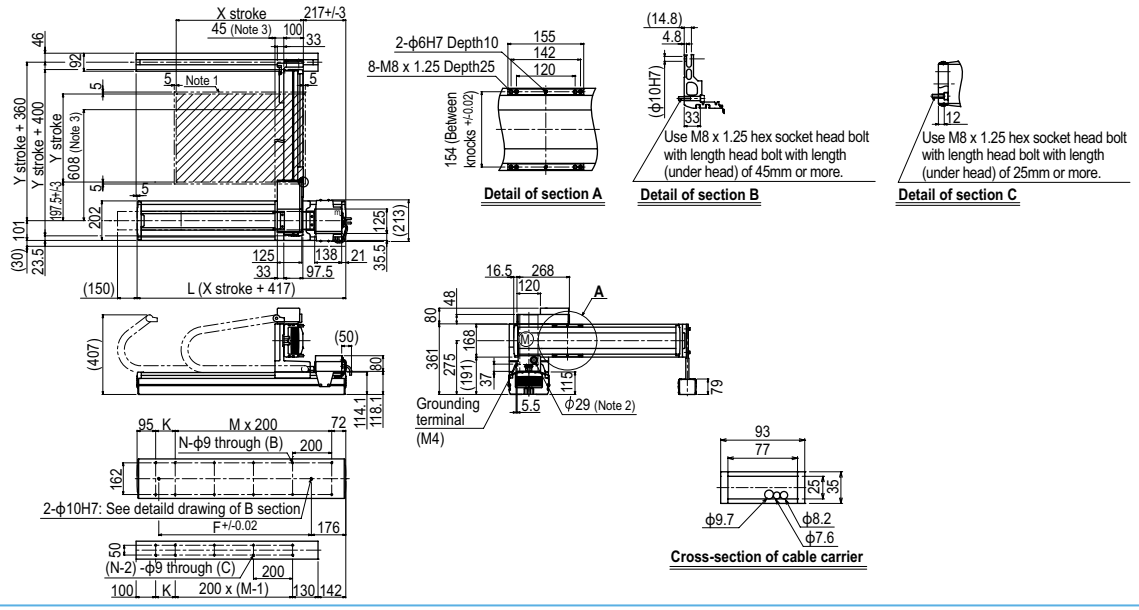

HXYx 3 axes / ZL

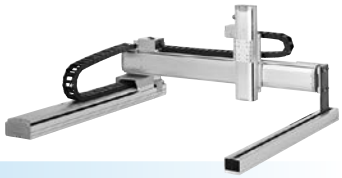

Gantry type | Cable carrier | Z-axis: clamped base / moving table type (200W)

Ordering method

HXYx - C	-	-	-	- ZL	-	-	- RCX340-3	-	-	-	-	-	-	-
Model	Cable	Combination	X-axis stroke	Y-axis stroke	ZR-axis	Z-axis stroke	Cable	Controller / Number of controllable axes	Safety standard	Option A (OP.A)	Option B (OP.B)	Option C (OP.C)	Option D (OP.D)	Option E (OP.E)	Absolute battery
		G1 G2 G3 G4	25 to 125cm	25 to 105cm		25 to 55cm	3L: 3.5m 5L: 5m 10L: 10m								

Specify various controller setting items. RCX340 ▶ P.636

Specification

	X-axis	Y-axis	Z-axis
Axis construction Note 1	F20	F17	F14H-BK
AC servo motor output (W)	600	400	200
Repeatability Note 2 (mm)	+/-0.01	+/-0.01	+/-0.01
Drive system	Ball screw ϕ20	Ball screw ϕ20	Ball screw ϕ15
Ball screw lead Note 3 (Deceleration ratio) (mm)	20	20	10
Maximum speed Note 4 (mm/sec)	1200	1200	600
Moving range (mm)	250 to 1250	250 to 1050	250 to 550
Robot cable length (m)	Standard: 3.5 Option: 5,10		

Note 1. Use caution that the flame machining (installation holes, tap holes) differs from single-axis robots'.
Note 2. Positioning repeatability in one direction.
Note 3. Leads not listed in the catalog are also available. Contact us for details.
Note 4. When the X-axis/Y-axis stroke is longer than 850mm, resonance of the ball screw may occur depending on the operation conditions (critical speed). In this case, reduce the speed setting on the program by referring to the maximum speeds shown in the table below.

Maximum payload (kg)

	Z stroke (mm)
Y stroke (mm)	250 to 550
250 to 1050	20

Controller

Controller	Operation method
RCX340	Programming / I/O point trace / Remote command / Operation using RS-232C communication

HXYx 3 axes / ZL G1

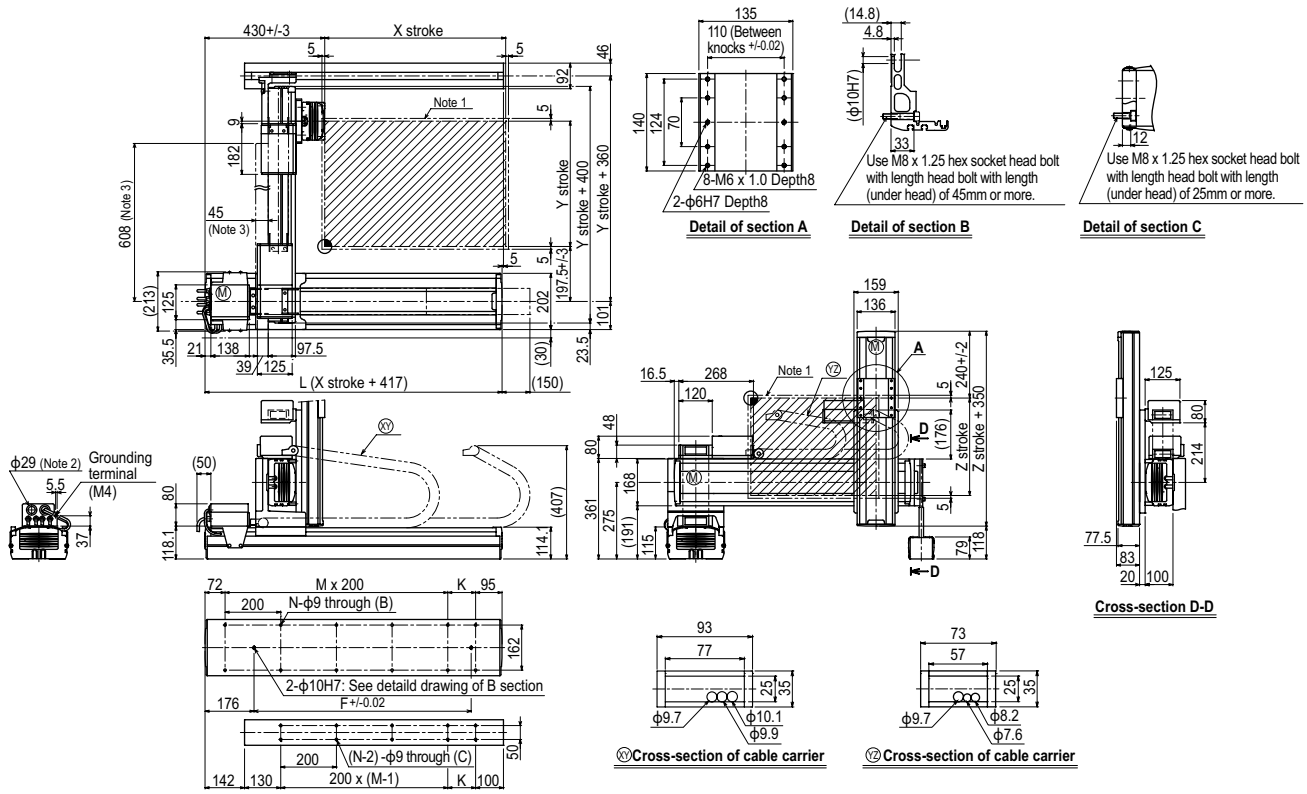

X stroke	250	350	450	550	650	750	850	950	1050	1150	1250
L	667	767	867	967	1067	1167	1267	1367	1467	1567	1667
K	100	200	100	200	100	200	100	200	100	200	100
F	420	420	600	600	780	780	960	960	1140	1320	1320
M	2	2	3	3	4	4	5	5	6	6	7
N	8	8	10	10	12	12	14	14	16	16	18

Y stroke	250	350	450	550	650	750	850	950	1050
Z stroke	250	350	450	550					

Maximum speed for each stroke (mm/sec) Note 4								
X-axis	1200				960	840	720	600	480
Y-axis	1200				960	840	720		
Speed setting	–				80%	70%	60%	50%	40%

Note 1. The moving range when returning to origin and the stop position when stopping by the mechanical stopper.
Note 2. User cable extraction port.
Note 3. Dimension of reinforced bracket (To be installed when the Y stroke is 750mm or longer)
Note 4. When the X-axis/Y-axis stroke is longer than 850mm, resonance of the ball screw may occur depending on the operation conditions (critical speed). In this case, reduce the speed setting on the program by referring to the maximum speeds shown in the table at the left.

Controller RCX340 ▶ 636

HXYx 3 axes / ZH

Gantry type | Cable carrier | Z-axis: clamped table / moving base type (200W)

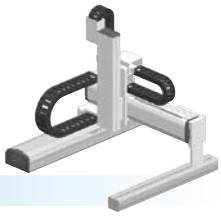

Ordering method

HXYx - C	-	[ ]	-	[ ]	-	[ ]	- ZH -	[ ]	-	[ ]	- RCX340-3	-	[ ]	-	[ ]	-	[ ]	-	[ ]	-	[ ]	-	[ ]
Model	Cable	Combination	X-axis stroke	Y-axis stroke	ZR-axis	Z-axis stroke	Cable	Controller / Number of controllable axes	Safety standard	Option A (OP.A)	Option B (OP.B)	Option C (OP.C)	Option D (OP.D)	Option E (OP.E)	Absolute battery
		G1 G2 G3 G4	25 to 125cm	25 to 105cm		25 to 55cm	3L: 3.5m 5L: 5m 10L: 10m								

Specify various controller setting items. RCX340 ▶ P636

Specification

	X-axis	Y-axis	Z-axis
Axis construction Note 1	F20	F17	F14H-BK
AC servo motor output (W)	600	400	200
Repeatability Note 2 (mm)	+/-0.01	+/-0.01	+/-0.01
Drive system	Ball screw ϕ20	Ball screw ϕ20	Ball screw ϕ15
Ball screw lead Note 3 (Deceleration ratio) (mm)	20	20	5
Maximum speed Note 4 (mm/sec)	1200	1200	300
Moving range (mm)	250 to 1250	250 to 1050	250 to 550
Robot cable length (m)	Standard: 3.5 Option: 5,10		

Note 1. Use caution that the flame machining (installation holes, tap holes) differs from single-axis robots'.
Note 2. Positioning repeatability in one direction.
Note 3. Leads not listed in the catalog are also available. Contact us for details.
Note 4. When the X-axis/Y-axis stroke is longer than 850mm, resonance of the ball screw may occur depending on the operation conditions (critical speed). In this case, reduce the speed setting on the program by referring to the maximum speeds shown in the table below.

Maximum payload (kg)

	Z stroke (mm)
Y stroke (mm)	250 to 550
250 to 1050	30

Controller

Controller	Operation method
RCX340	Programming / I/O point trace / Remote command / Operation using RS-232C communication

HXYx 3 axes / ZH G1

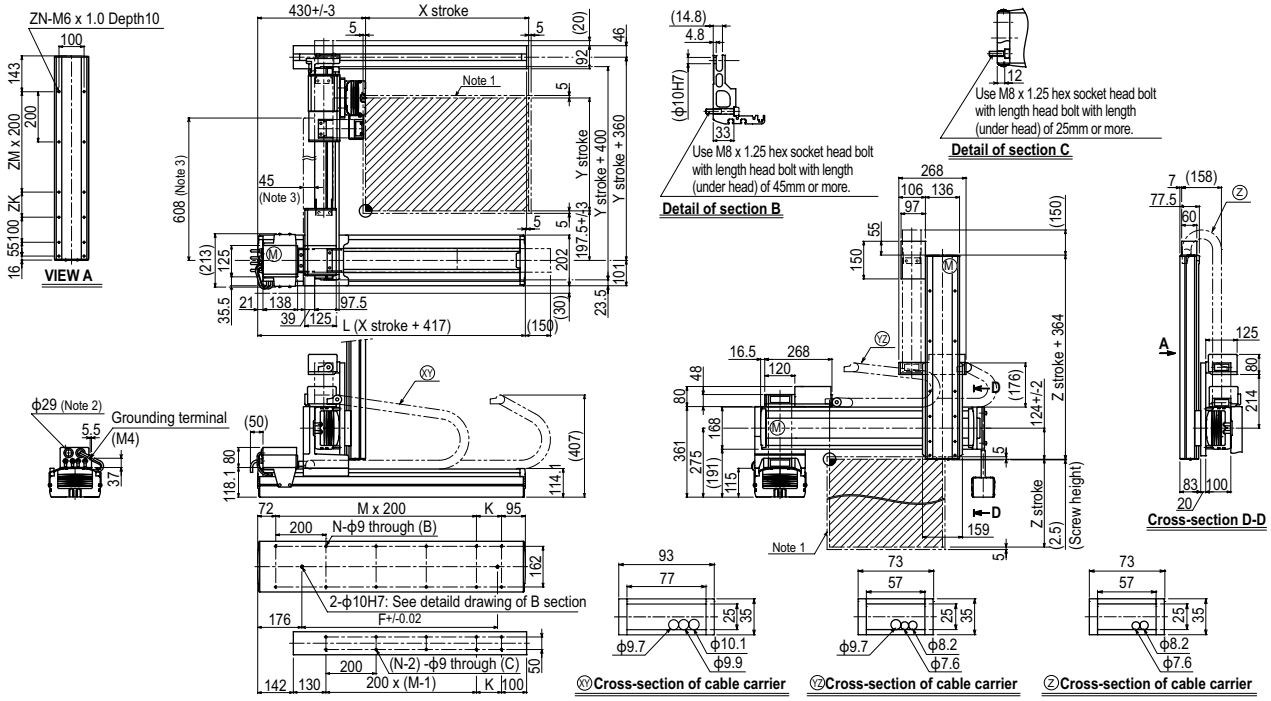

X stroke	250	350	450	550	650	750	850	950	1050	1150	1250
L	667	767	867	967	1067	1167	1267	1367	1467	1567	1667
K	100	200	100	200	100	200	100	200	100	200	100
F	420	420	600	600	780	780	960	960	1140	1320	1320
M	2	2	3	3	4	4	5	5	6	6	7
N	8	8	10	10	12	12	14	14	16	16	18

Y stroke	250	350	450	550	650	750	850	950	1050

Z stroke	250	350	450	550
ZK	100	200	100	200
ZM	1	1	2	2
ZN	10	10	12	12

Maximum speed for each stroke (mm/sec) Note 4								
X-axis	1200			960	840	720	600	480
Y-axis	1200			960	840	720		
Speed setting	–			80%	70%	60%	50%	40%

Note 1. The moving range when returning to origin and the stop position when stopping by the mechanical stopper.
Note 2. User cable extraction port.
Note 3. Dimension of reinforced bracket (To be installed when the Y stroke is 750mm or longer)

Note 4. When the X-axis/Y-axis stroke is longer than 850mm, resonance of the ball screw may occur depending on the operation conditions (critical speed). In this case, reduce the speed setting on the program by referring to the maximum speeds shown in the table at the left.

Controller RCX340 ▶ 636

HXYx 4 axes / ZRL

Gantry type | Cable carrier | Z-axis: clamped base / moving table type (200W)+R-axis

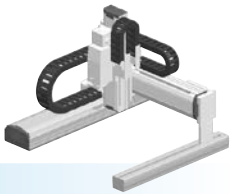

Ordering method

HXYx - C	-	-	-	- ZRL	-	-	- RCX340-4	-	-	-	-	-	-	-
Model	Cable	Combination	X-axis stroke	Y-axis stroke	ZR-axis	Z-axis stroke	Cable	Controller / Number of controllable axes	Safety standard	Option A (OP.A)	Option B (OP.B)	Option C (OP.C)	Option D (OP.D)	Option E (OP.E)	Absolute battery
		G1 G2 G3 G4	25 to 125cm	25 to 105cm		25 to 55cm	3L: 3.5m 5L: 5m 10L: 10m								

Specify various controller setting items. RCX340 ▶ P.636

Specification

	X-axis	Y-axis	Z-axis	R-axis
Axis construction Note 1	F20	F17	F14H-BK	R20
AC servo motor output (W)	600	400	200	200
Repeatability Note 2 (XYZ: mm) (R: °)	+/-0.01	+/-0.01	+/-0.01	+/-0.0083
Drive system	Ball screw ϕ20	Ball screw ϕ20	Ball screw ϕ15	Harmonic gear
Ball screw lead Note 3 (Deceleration ratio) (mm)	20	20	10	(1/50)
Maximum speed Note 4 (XYZ: mm/sec) (R: °/sec)	1200	1200	600	360
Moving range (XYZ: mm) (R: °)	250 to 1250	250 to 1050	250 to 550	360
Robot cable length (m)	Standard: 3.5 Option: 5,10			

Note 1. Use caution that the flame machining (installation holes, tap holes) differs from single-axis robots'.
Note 2. Positioning repeatability in one direction.
Note 3. Leads not listed in the catalog are also available. Contact us for details.
Note 4. When the X-axis/Y-axis stroke is longer than 850mm, resonance of the ball screw may occur depending on the operation conditions (critical speed). In this case, reduce the speed setting on the program by referring to the maximum speeds shown in the table below.

Maximum payload (kg)

	Z stroke (mm)
Y stroke (mm)	250 to 550
250 to 1050	12

Controller

Controller	Operation method
RCX340	Programming / I/O point trace / Remote command / Operation using RS-232C communication

HXYx 4 axes / ZRL G1

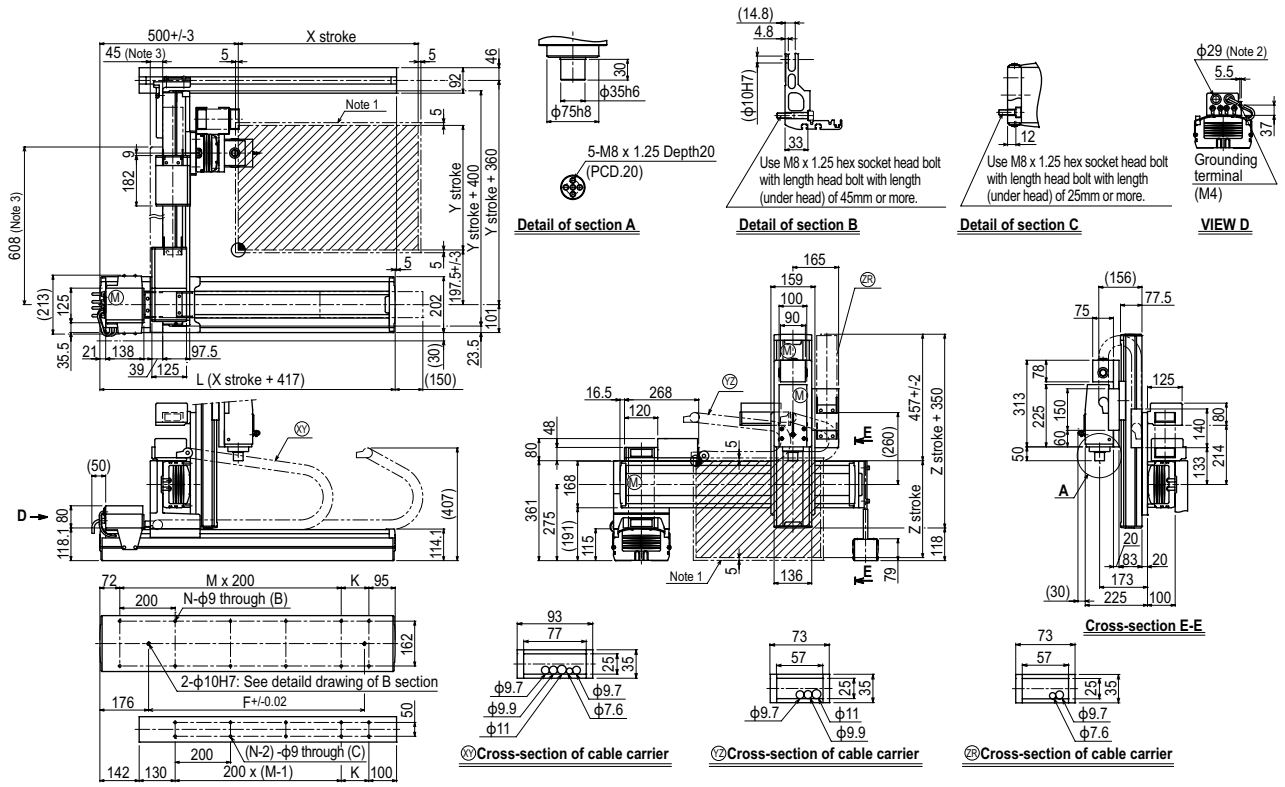

X stroke	250	350	450	550	650	750	850	950	1050	1150	1250
L	667	767	867	967	1067	1167	1267	1367	1467	1567	1667
K	100	200	100	200	100	200	100	200	100	200	100
F	420	420	600	600	780	780	960	960	1140	1320	1320
M	2	2	3	3	4	4	5	5	6	6	7
N	8	8	10	10	12	12	14	14	16	16	18

Y stroke	250	350	450	550	650	750	850	950	1050

Z stroke	250	350	450	550

Maximum speed for each stroke (mm/sec) Note 4								
X-axis	1200				960	840	720	600	480
Y-axis	1200				960	840	720		
Speed setting	–				80%	70%	60%	50%	40%

Note 1. The moving range when returning to origin and the stop position when stopping by the mechanical stopper.
Note 2. User cable extraction port.
Note 3. Dimension of reinforced bracket (To be installed when the Y stroke is 750mm or longer)

Note 4. When the X-axis/Y-axis stroke is longer than 850mm, resonance of the ball screw may occur depending on the operation conditions (critical speed). In this case, reduce the speed setting on the program by referring to the maximum speeds shown in the table at the left.

HXYx 4 axes / ZRH

Gantry type | Cable carrier | Z-axis: clamped table / moving base type (200W)+R-axis

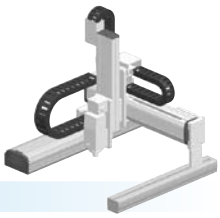

Ordering method

HXYx - C	-		-		-		-		-		-		-		-		-		-		-	
Model	Cable	Combination	X-axis stroke	Y-axis stroke	ZR-axis	Z-axis stroke	Cable	Controller / Number of controllable axes	Safety standard	Option A (OP.A)	Option B (OP.B)	Option C (OP.C)	Option D (OP.D)	Option E (OP.E)	Absolute battery
		G1 G2 G3 G4	25 to 125cm	25 to 105cm		25 to 55cm	3L: 3.5m 5L: 5m 10L: 10m	RCX340-4							

Specify various controller setting items. RCX340 ▶ P.636

Specification

	X-axis	Y-axis	Z-axis	R-axis
Axis construction Note 1	F20	F17	F14H	R20
AC servo motor output (W)	600	400	200	200
Repeatability Note 2 (XYZ: mm) (R: °)	+/-0.01	+/-0.01	+/-0.01	+/-0.0083
Drive system	Ball screw ϕ20	Ball screw ϕ20	Ball screw ϕ15	Harmonic gear
Ball screw lead Note 3 (Deceleration ratio) (mm)	20	20	5	(1/50)
Maximum speed Note 4 (XYZ: mm/sec) (R: °/sec)	1200	1200	300	360
Moving range (XYZ: mm) (R: °)	250 to 1250	250 to 1050	250 to 550	360
Robot cable length (m)	Standard: 3.5 Option: 5,10			

Note 1. Use caution that the flame machining (installation holes, tap holes) differs from single-axis robots'.
Note 2. Positioning repeatability in one direction.
Note 3. Leads not listed in the catalog are also available. Contact us for details.
Note 4. When the X-axis/Y-axis stroke is longer than 850mm, resonance of the ball screw may occur depending on the operation conditions (critical speed). In this case, reduce the speed setting on the program by referring to the maximum speeds shown in the table below.

Maximum payload (kg)

	Z stroke (mm)
Y stroke (mm)	250 to 550
250 to 1050	20

Controller

Controller	Operation method
RCX340	Programming / I/O point trace / Remote command / Operation using RS-232C communication

HXYx 4 axes / ZRH G1

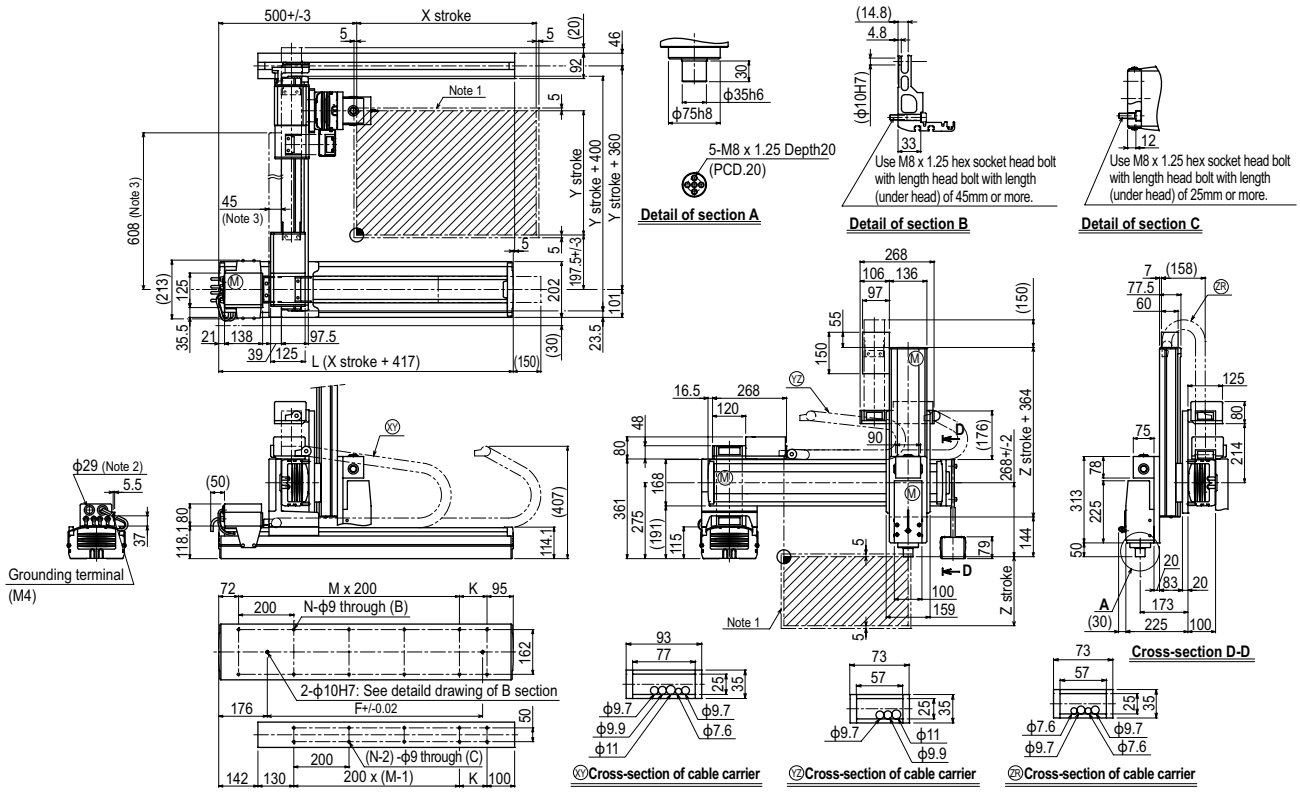

X stroke	250	350	450	550	650	750	850	950	1050	1150	1250
L	667	767	867	967	1067	1167	1267	1367	1467	1567	1667
K	100	200	100	200	100	200	100	200	100	200	100
F	420	420	600	600	780	780	960	960	1140	1320	1320
M	2	2	3	3	4	4	5	5	6	6	7
N	8	8	10	10	12	12	14	14	16	16	18

Y stroke	250	350	450	550	650	750	850	950	1050
Z stroke	250	350	450	550					

Maximum speed for each stroke (mm/sec) Note 4									
	X-axis	1200				960	840	720	600	480
	Y-axis	1200				960	840	720		
	Speed setting	–				80%	70%	60%	50%	40%

Note 1. The moving range when returning to origin and the stop position when stopping by the mechanical stopper.
Note 2. User cable extraction port.
Note 3. Dimension of reinforced bracket (To be installed when the Y stroke is 750mm or longer)

Note 4. When the X-axis/Y-axis stroke is longer than 850mm, resonance of the ball screw may occur depending on the operation conditions (critical speed). In this case, reduce the speed setting on the program by referring to the maximum speeds shown in the table at the left.

HXYLx 2 axes

Gantry type | Cable carrier

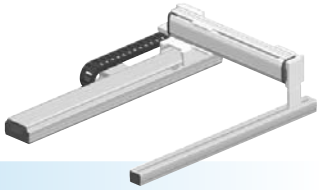

Ordering method

HXYLx - C	-		-		-		-	RCX320-2	-		-		-		-		-	
Model	Cable	Combination	X-axis stroke	Y-axis stroke	Cable	Controller / Number of controllable axes	Safety standard	Regeneratine unit	Option A (OP.A)	Option B (OP.B)	Vision System	Absolute battery
		G1 G2 G3 G4	115 to 205cm	25 to 105cm	3L: 3.5m 5L: 5m 10L: 10m			R				

Specify various controller setting items. RCX320 ▶ P.626

Specification

	X-axis	Y-axis
Axis construction Note 1	F20N	F17
AC servo motor output (W)	400	400
Repeatability Note 2 (mm)	+/-0.04	+/-0.01
Drive system	Ball screw ϕ20	Ball screw ϕ20
Ball screw lead Note 3 (Deceleration ratio) (mm)	20	20
Maximum speed Note 4 (mm/sec)	1200	1200
Moving range (mm)	1150 to 2050	250 to 1050
Robot cable length (m)	Standard: 3.5 Option: 5,10	

Note 1. Use caution that the flame machining (installation holes, tap holes) differs from single-axis robots'.
Note 2. Positioning repeatability in one direction.
Note 3. Leads not listed in the catalog are also available. Contact us for details.
Note 4. When the Y-axis stroke is longer than 850mm, resonance of the ball screw may occur depending on the operation conditions (critical speed). In this case, reduce the speed setting on the program by referring to the maximum speeds shown in the table below.

Maximum payload (kg)

Y stroke (mm)	XY 2 axes
250 to 1050	50

Controller

Controller	Operation method
RCX320-R	Programming / I/O point trace / Remote command / Operation using RS-232C communication

HXYLx 2 axes G1

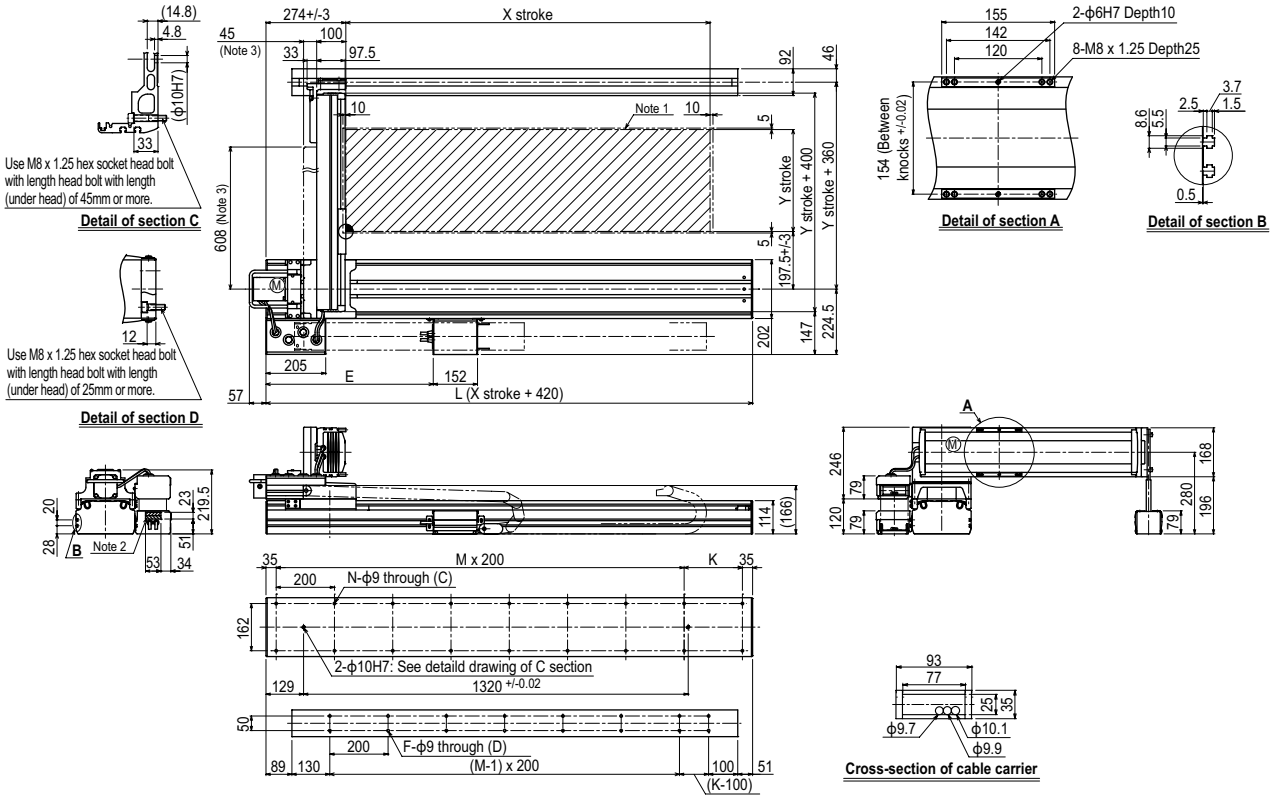

X stroke	1150	1250	1350	1450	1550	1650	1750	1850	1950	2050
L	1570	1670	1770	1870	1970	2070	2170	2270	2370	2470
E	528	574	620	666	712	758	804	850	896	942
K	100	200	100	200	100	200	100	200	100	200
M	7	7	8	8	9	9	10	10	11	11
N	18	18	20	20	22	22	24	24	26	26
F	14	16	16	18	18	20	20	22	22	24

Y stroke	250	350	450	550	650	750	850	950	1050
Maximum speed for each stroke (mm/sec) Note 4 — Y-axis	1200						960	840	720
Maximum speed for each stroke (mm/sec) Note 4 — Speed setting	–						80%	70%	60%

Note 1. The moving range when returning to origin and the stop position when stopping by the mechanical stopper.
Note 2. User cable extraction port.
Note 3. Dimension of reinforced bracket (To be installed when the Y stroke is 750mm or longer)

Note 4. When the Y-axis stroke is longer than 850mm, resonance of the ball screw may occur depending on the operation conditions (critical speed). In this case, reduce the speed setting on the program by referring to the maximum speeds shown in the table at the left.

HXYLx 2 axes G2

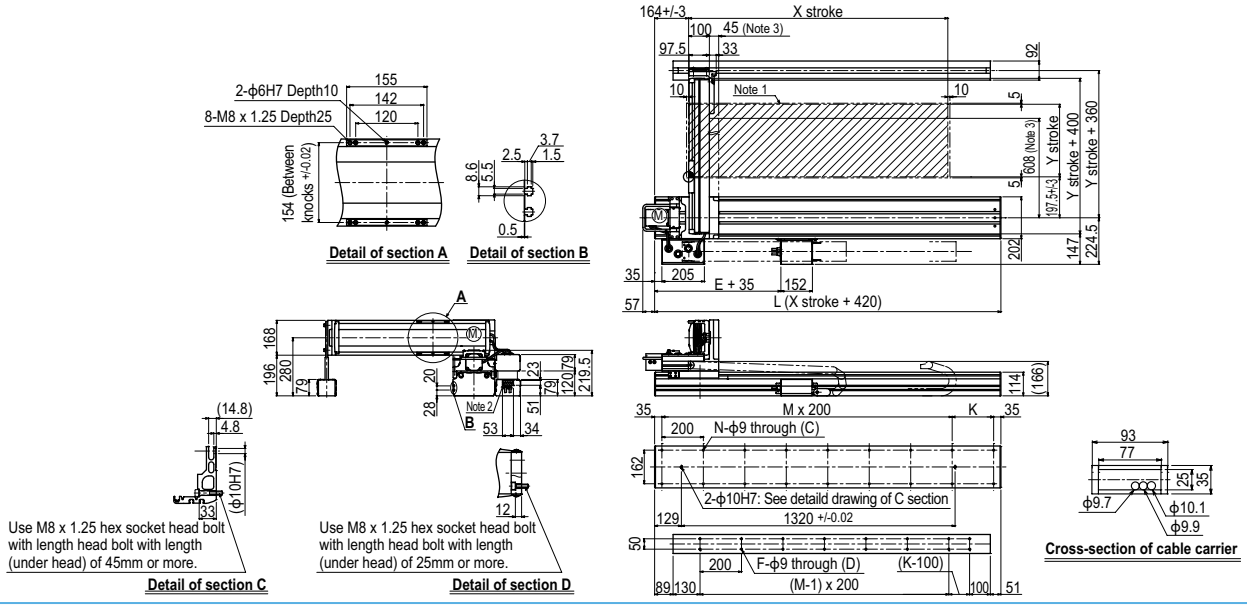

HXYLx 2 axes G3

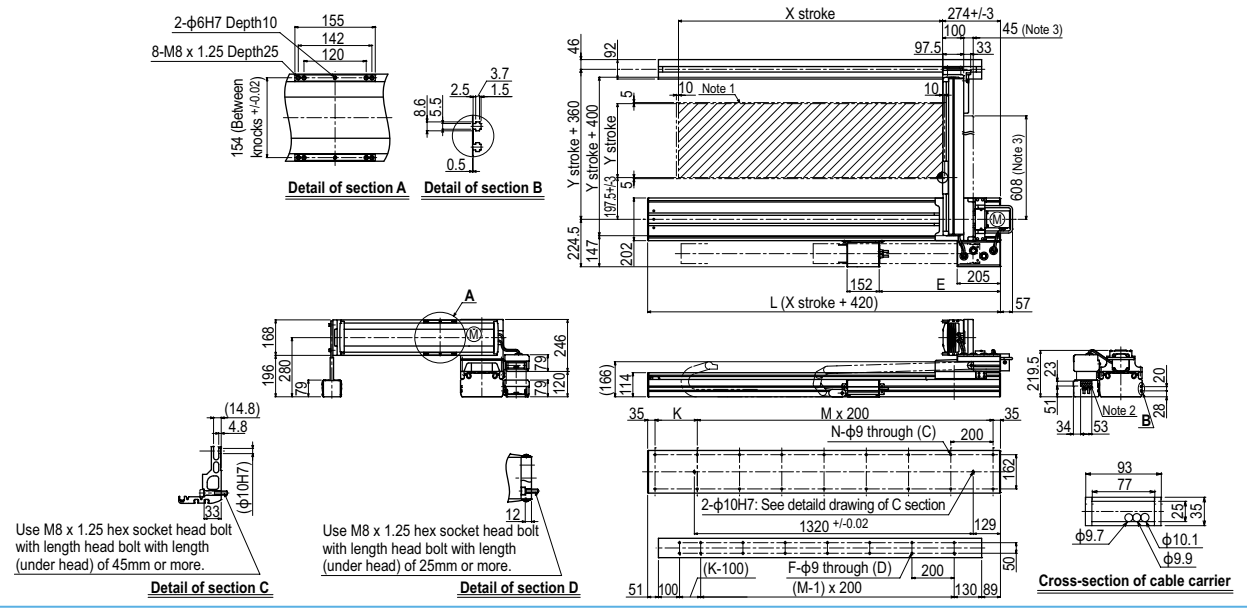

HXYLx 2 axes G4

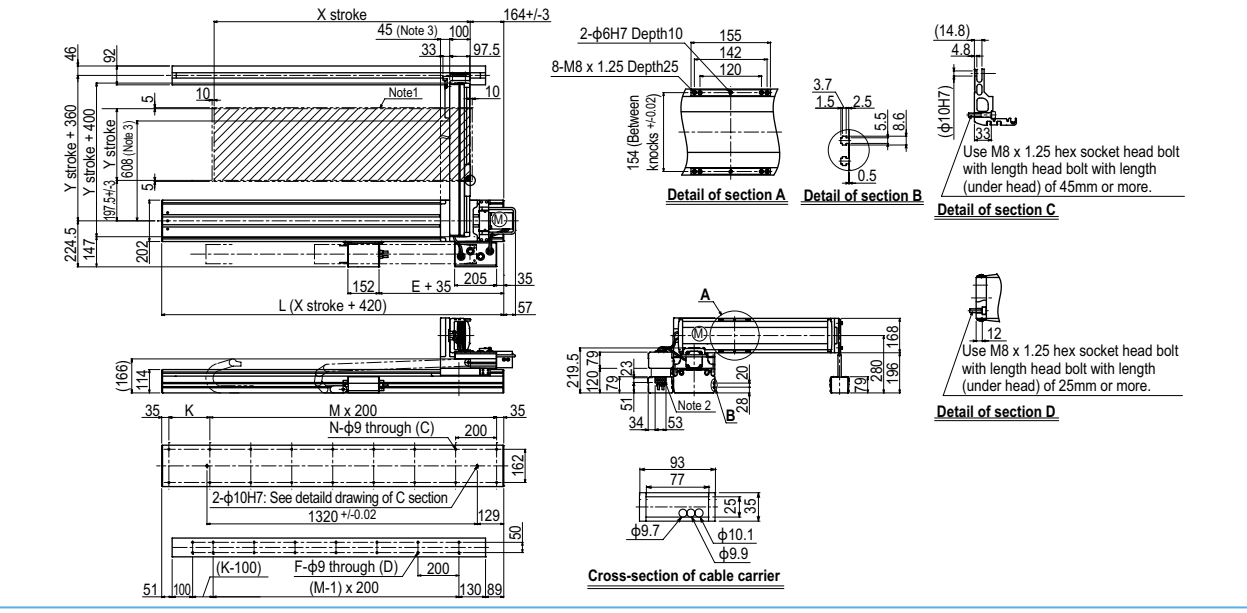

SXYx 2 axes

Moving arm type Whipover

Ordering method

SXYx - S	-		-		-		-	RCX320-2	-		-		-		-
Model	Cable	Combination	X-axis stroke Note 1	Y-axis stroke Note 1	Cable	Controller / Number of controllable axes	Safety standard	Option A (OP.A)	Option B (OP.B)	Vision System	Absolute battery
		M1 M3	15 to 85cm	15 to 35cm	3L: 3.5m 5L: 5m 10L: 10m						

Specify various controller setting items. RCX320 ▶ P626

Note 1. The total of the X and Y strokes should be 1000mm or less.

Specification

	X-axis	Y-axis
Axis construction Note 1	F14H	F14
AC servo motor output (W)	200	100
Repeatability Note 2 (mm)	+/-0.01	+/-0.01
Drive system	Ball screw ϕ15	Ball screw ϕ15
Ball screw lead Note 3 (Deceleration ratio) (mm)	20	20
Maximum speed Note 4 (mm/sec)	1200	1200
Moving range (mm)	150 to 850	150 to 350
Robot cable length (m)	Standard: 3.5 Option: 5,10	

Note 1. Use caution that the flame machining (installation holes, tap holes) differs from single-axis robots'.
Note 2. Positioning repeatability in one direction.
Note 3. Leads not listed in the catalog are also available. Contact us for details.
Note 4. When the X-axis stroke is longer than 750mm, resonance of the ball screw may occur depending on the operation conditions (critical speed). In this case, reduce the speed setting on the program by referring to the maximum speeds shown in the table below.

Maximum payload (kg)

Y stroke (mm)	XY 2 axes
150	15
250	14
350	13

Controller

Controller	Operation method
RCX320	Programming / I/O point trace / Remote command / Operation using RS-232C communication

SXYx 2 axes M1

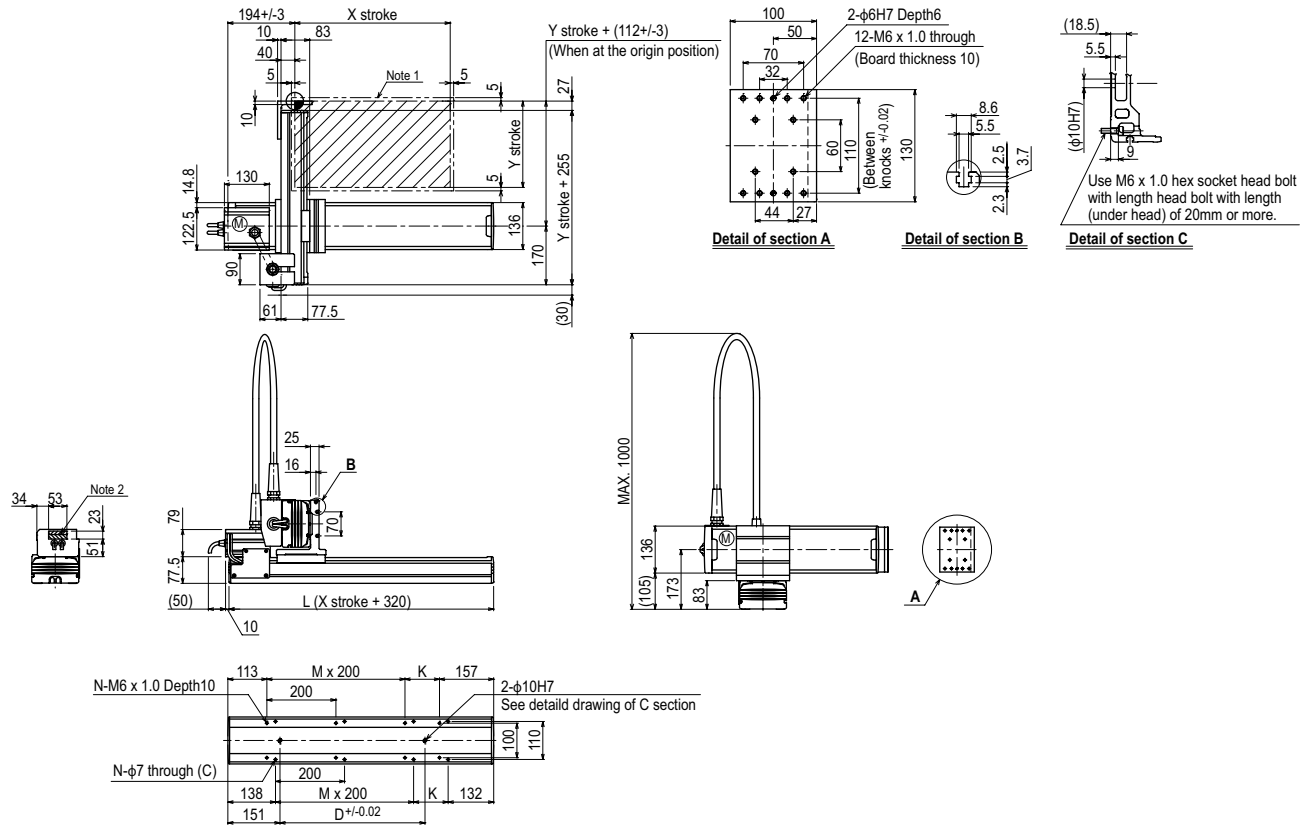

X stroke Note 3	150	250	350	450	550	650	750	850
L	470	570	670	770	870	970	1070	1170
K	200	100	200	100	200	100	200	100
D	240	240	420	420	600	600	780	960
M	0	1	1	2	2	3	3	4
N	4	6	6	8	8	10	10	12

Y stroke Note 3	150	250	350

Maximum speed for each stroke (mm/sec) Note 4				
X-axis	1200		960	780
Speed setting	–		80%	65%

Note 1. The moving range when returning to origin and the stop position when stopping by the mechanical stopper.
Note 2. The shaded position indicates an user cable extraction port.
Note 3. The total of the X and Y strokes should be 1000mm or less.
Note 4. When the X-axis stroke is longer than 750mm, resonance of the ball screw may occur depending on the operation conditions (critical speed). In this case, reduce the speed setting on the program by referring to the maximum speeds shown in the table at the left.

SXYx 2 axes M3

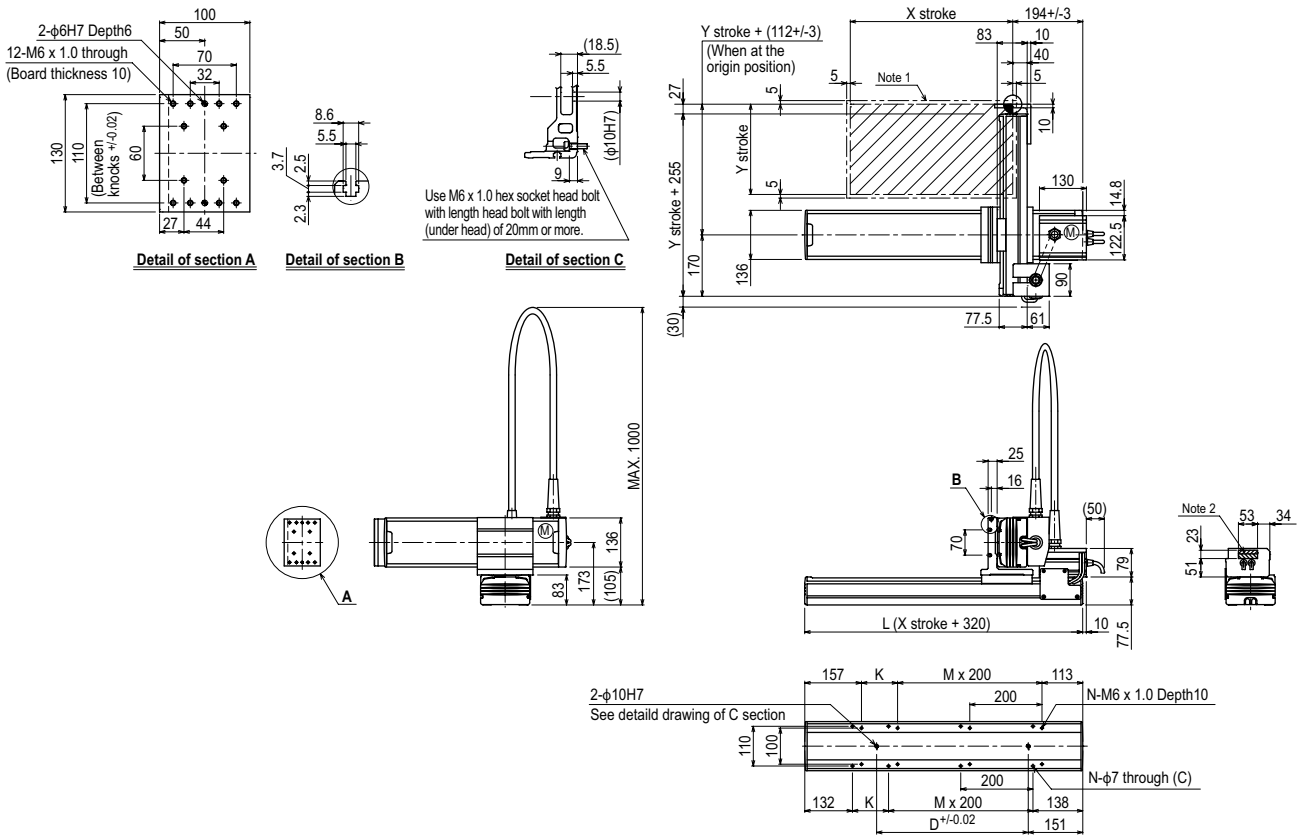

X stroke Note 3	150	250	350	450	550	650	750	850
L	470	570	670	770	870	970	1070	1170
K	200	100	200	100	200	100	200	100
D	240	240	420	420	600	600	780	960
M	0	1	1	2	2	3	3	4
N	4	6	6	8	8	10	10	12

Y stroke Note3	150	250	350

Maximum speed for each stroke (mm/sec) Note 4							
	X-axis	1200				960	780
	Speed setting	–				80%	65%

Note 1. The moving range when returning to origin and the stop position when stopping by the mechanical stopper.
Note 2. The shaded position indicates an user cable extraction port.

Note 3. The total of the X and Y strokes should be 1000mm or less.
Note 4. When the X-axis stroke is longer than 750mm, resonance of the ball screw may occur depending on the operation conditions (critical speed). In this case, reduce the speed setting on the program by referring to the maximum speeds shown in the table at the left.

SXYx 3 axes / ZF

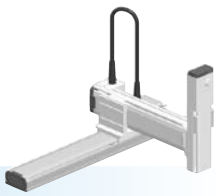

Moving arm type | Whipover | Z-axis: clamped base / moving table type (100W)

Ordering method

SXYx - S -		-		- ZF -			- RCX340-3 -							
Model	Cable	Combination	X-axis stroke Note 1	Y-axis stroke Note 1	ZR-axis	Z-axis stroke	Cable	Controller / Number of controllable axes	Safety standard	Option A (OP.A)	Option B (OP.B)	Option C (OP.C)	Option D (OP.D)	Option E (OP.E)	Absolute battery
		M1 M3	15 to 85cm	15 to 35cm		15 to 35cm	3L: 3.5m 5L: 5m 10L: 10m								

Specify various controller setting items. RCX340 ▶ P.636

Note 1. The total of the X and Y strokes should be 1000mm or less.

Specification

	X-axis	Y-axis	Z-axis
Axis construction Note 1	F14H	F14	F10-BK
AC servo motor output (W)	200	100	100
Repeatability Note 2 (mm)	+/-0.01	+/-0.01	+/-0.01
Drive system	Ball screw ϕ15	Ball screw ϕ15	Ball screw ϕ15
Ball screw lead Note 3 (Deceleration ratio) (mm)	20	20	10
Maximum speed Note 4 (mm/sec)	1200	1200	600
Moving range (mm)	150 to 850	150 to 350	150 to 350
Robot cable length (m)	Standard: 3.5 Option: 5,10		

Note 1. Use caution that the flame machining (installation holes, tap holes) differs from single-axis robots'.
Note 2. Positioning repeatability in one direction.
Note 3. Leads not listed in the catalog are also available. Contact us for details.
Note 4. When the X-axis stroke is longer than 750mm, resonance of the ball screw may occur depending on the operation conditions (critical speed). In this case, reduce the speed setting on the program by referring to the maximum speeds shown in the table below.

Maximum payload (kg)

	Z stroke (mm)		
Y stroke (mm)	150	250	350
150	9	8	7
250	8	7	6
350	7	6	5

Controller

Controller	Operation method
RCX340	Programming / I/O point trace / Remote command / Operation using RS-232C communication

SXYx 3 axes / ZF M1

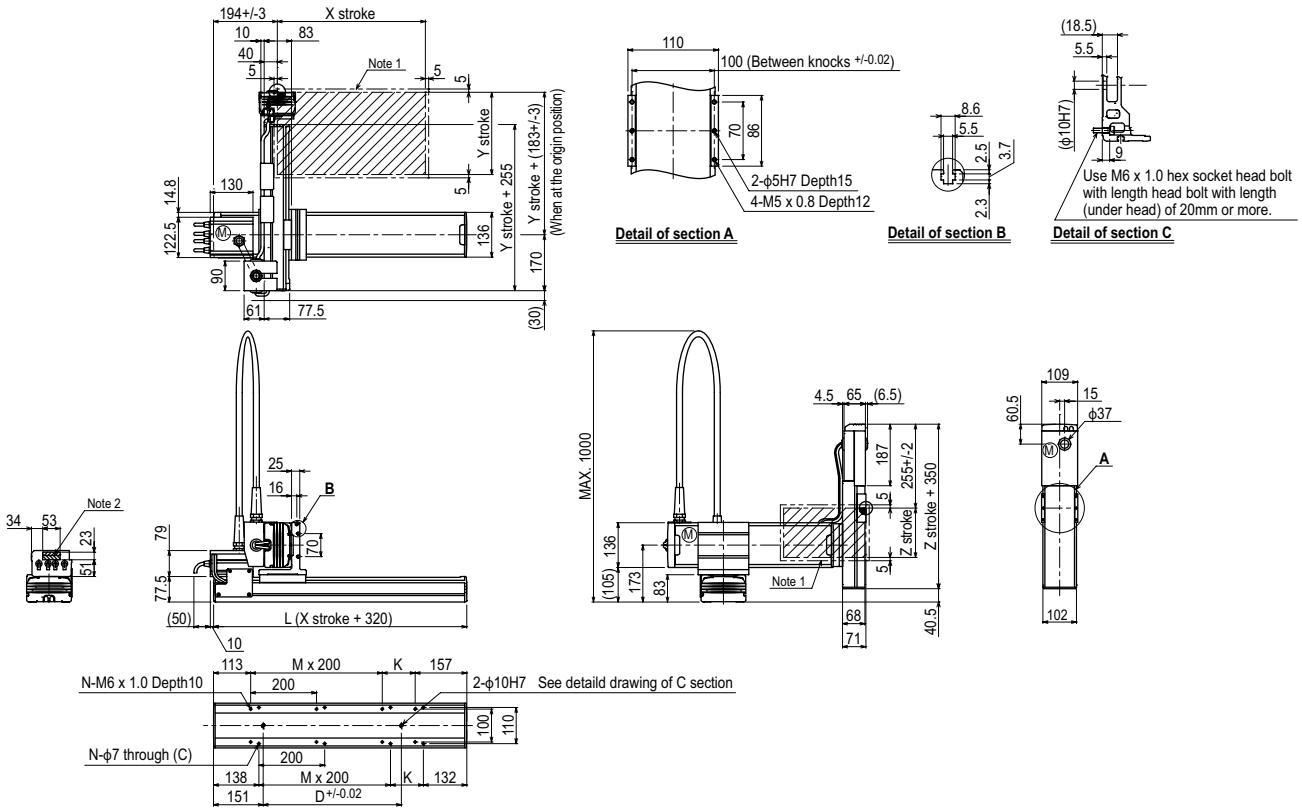

X stroke Note 3	150	250	350	450	550	650	750	850
L	470	570	670	770	870	970	1070	1170
K	200	100	200	100	200	100	200	100
D	240	240	420	420	600	600	780	960
M	0	1	1	2	2	3	3	4
N	4	6	6	8	8	10	10	12

Y stroke Note 3	150	250	350
Z stroke	150	250	350

Maximum speed for each stroke (mm/sec) Note 4				
X-axis	1200		960	780
Speed setting	–		80%	65%

Note 1. The moving range when returning to origin and the stop position when stopping by the mechanical stopper.
Note 2. The shaded position indicates an user cable extraction port.

Note 3. The total of the X and Y strokes should be 1000mm or less.
Note 4. When the X-axis stroke is longer than 750mm, resonance of the ball screw may occur depending on the operation conditions (critical speed). In this case, reduce the speed setting on the program by referring to the maximum speeds shown in the table at the left.

SXYx 3 axes / ZFL20

Moving arm type | Whipover | Z-axis: clamped base / moving table type (200W)

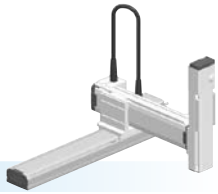

Ordering method

SXYx - S	-	[ ]	-	[ ]	-	[ ]	- ZFL20 -	[ ]	-	[ ]	- RCX340-3 -	[ ]	-	[ ]	-	[ ]	-	[ ]	-	[ ]	-	[ ]
Model	Cable	Combination	X-axis stroke Note 1	Y-axis stroke Note 1	ZR-axis	Z-axis stroke	Cable	Controller / Number of controllable axes	Safety standard	Option A (OP.A)	Option B (OP.B)	Option C (OP.C)	Option D (OP.D)	Option E (OP.E)	Absolute battery
		M1 M3	15 to 85cm	15 to 35cm		15 to 35cm	3L: 3.5m 5L: 5m 10L: 10m								

Specify various controller setting items. RCX340 ▶ P.636

Note 1.The total of the X and Y strokes should be 1000mm or less.

Specification

	X-axis	Y-axis	Z-axis
Axis construction Note 1	F14H	F14	F10H-BK
AC servo motor output (W)	200	100	200
Repeatability Note 2 (mm)	+/-0.01	+/-0.01	+/-0.01
Drive system	Ball screw ϕ15	Ball screw ϕ15	Ball screw ϕ15
Ball screw lead Note 3 (Deceleration ratio) (mm)	20	20	20
Maximum speed Note 4 (mm/sec)	1200	1200	1200
Moving range (mm)	150 to 850	150 to 350	150 to 350
Robot cable length (m)	Standard: 3.5 Option: 5,10		

Note 1. Use caution that the flame machining (installation holes, tap holes) differs from single-axis robots'.
Note 2. Positioning repeatability in one direction.
Note 3. Leads not listed in the catalog are also available. Contact us for details.
Note 4. When the X-axis stroke is longer than 750mm, resonance of the ball screw may occur depending on the operation conditions (critical speed). In this case, reduce the speed setting on the program by referring to the maximum speeds shown in the table below.

Maximum payload (kg)

	Z stroke (mm)		
Y stroke (mm)	150	250	350
150	8	8	7
250	8	7	6
350	7	6	5

Controller

Controller	Operation method
RCX340	Programming / I/O point trace / Remote command / Operation using RS-232C communication

SXYx 3 axes / ZFL20 M1

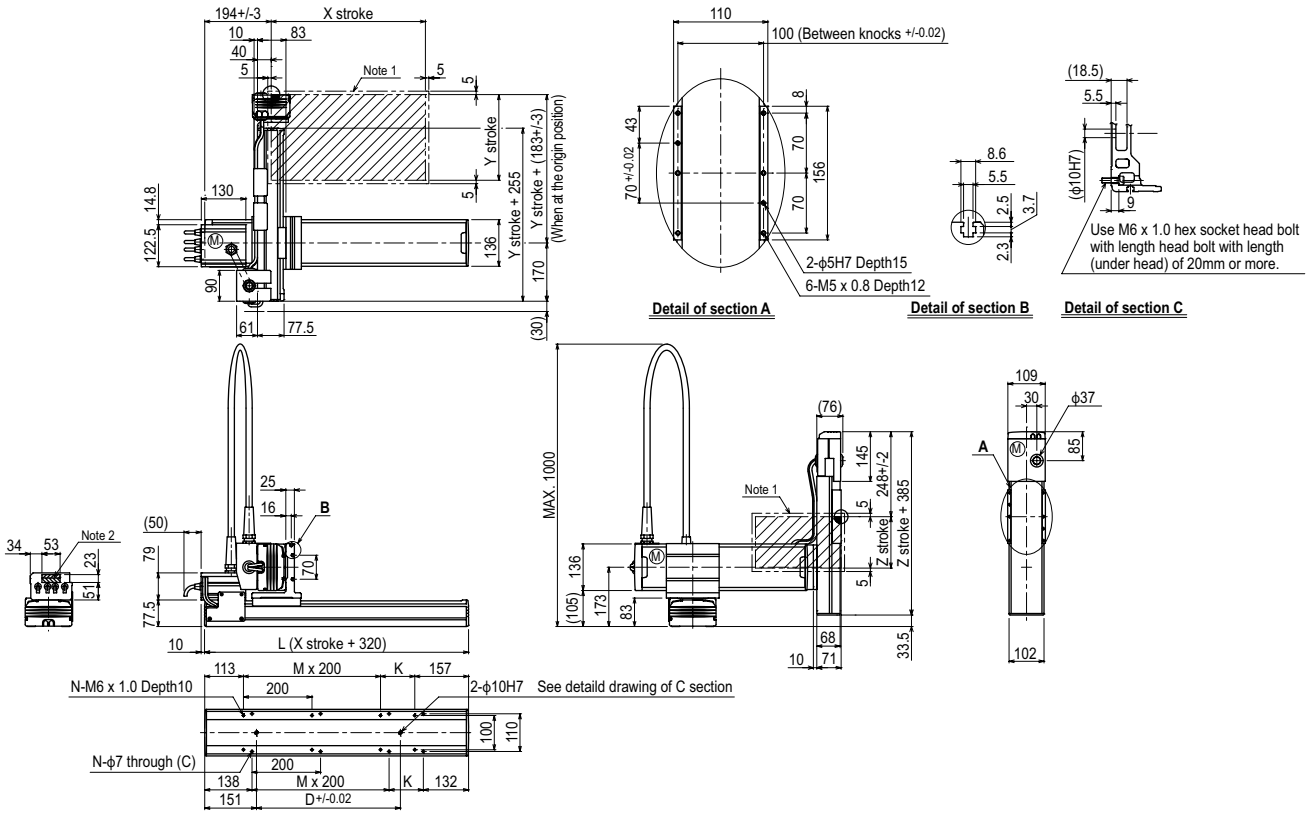

X stroke Note 3	150	250	350	450	550	650	750	850
L	470	570	670	770	870	970	1070	1170
A	200	100	200	100	200	100	200	100
D	240	240	420	420	600	600	780	960
M	0	1	1	2	2	3	3	4
N	4	6	6	8	8	10	10	12

Y stroke Note 3	150	250	350
Z stroke	150	250	350

Maximum speed for each stroke (mm/sec) Note 4				
	X-axis	1200	960	780
	Speed setting	–	80%	65%

Note 1. The moving range when returning to origin and the stop position when stopping by the mechanical stopper.
Note 2. The shaded position indicates an user cable extraction port.

Note 3. The total of the X and Y strokes should be 1000mm or less.
Note 4. When the X-axis stroke is longer than 750mm, resonance of the ball screw may occur depending on the operation conditions (critical speed). In this case, reduce the speed setting on the program by referring to the maximum speeds shown in the table at the left.

Controller RCX340 ▶ 636

SXYx 3 axes / ZFH

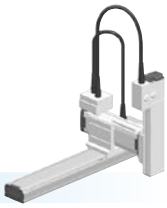

Moving arm type | Whipover | Z-axis: clamped table / moving base type (200W)

Ordering method

SXYx - S	-		-		-		- ZFH -			- RCX340-3 -								
Model	Cable	Combination	X-axis stroke Note 1	Y-axis stroke Note 1	ZR-axis	Z-axis stroke	Cable	Controller / Number of controllable axes	Safety standard	Option A (OP.A)	Option B (OP.B)	Option C (OP.C)	Option D (OP.D)	Option E (OP.E)	Absolute battery
		M1 M3	15 to 85cm	15 to 35cm		15 to 35cm	3L: 3.5m 5L: 5m 10L: 10m								

Specify various controller setting items. RCX340 ▶ P636

Note 1. The total of the X and Y strokes should be 1000mm or less.

Specification

	X-axis	Y-axis	Z-axis
Axis construction Note 1	F14H	F14	F10H-BK
AC servo motor output (W)	200	100	200
Repeatability Note 2 (mm)	+/-0.01	+/-0.01	+/-0.01
Drive system	Ball screw ϕ15	Ball screw ϕ15	Ball screw ϕ15
Ball screw lead Note 3 (Deceleration ratio) (mm)	20	20	10
Maximum speed Note 4 (mm/sec) (°/sec)	1200	1200	600
Moving range (mm)	150 to 850	150 to 350	150 to 350
Robot cable length (m)	Standard: 3.5 Option: 5,10		

Note 1. Use caution that the flame machining (installation holes, tap holes) differs from single-axis robots'.
Note 2. Positioning repeatability in one direction.
Note 3. Leads not listed in the catalog are also available. Contact us for details.
Note 4. When the X-axis stroke is longer than 750mm, resonance of the ball screw may occur depending on the operation conditions (critical speed). In this case, reduce the speed setting on the program by referring to the maximum speeds shown in the table below.

Maximum payload (kg)

	Z stroke (mm)		
Y stroke (mm)	150	250	350
150	9	8	7
250	8	7	6
350	7	6	5

Controller

Controller	Operation method
RCX340	Programming / I/O point trace / Remote command / Operation using RS-232C communication

SXYx 3 axes / ZFH M1

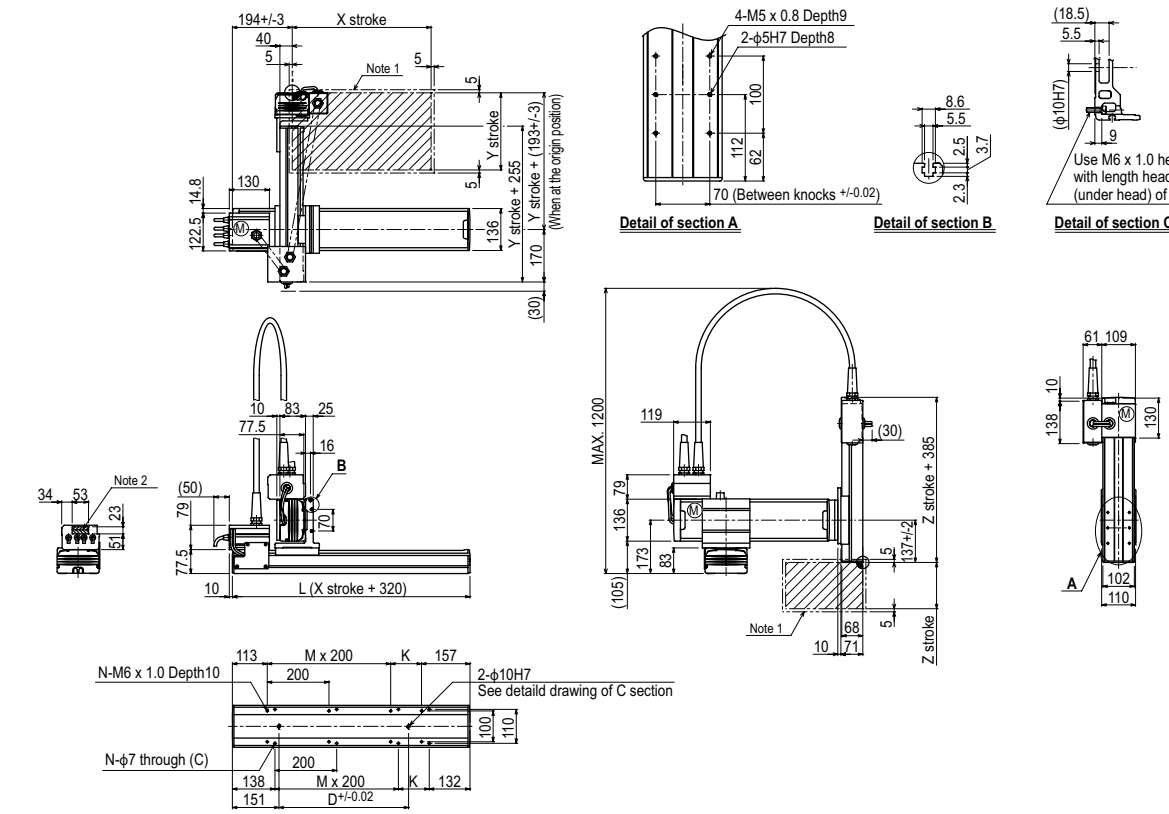

X stroke Note 3	150	250	350	450	550	650	750	850
L	470	570	670	770	870	970	1070	1170
K	200	100	200	100	200	100	200	100
D	240	240	420	420	600	600	780	960
M	0	1	1	2	2	3	3	4
N	4	6	6	8	8	10	10	12

Y stroke Note 3	150	250	350
Z stroke	150	250	350

Maximum speed for each stroke (mm/sec) Note 4				
	X-axis	1200	960	780
	Speed setting	–	80%	65%

Note 1. The moving range when returning to origin and the stop position when stopping by the mechanical stopper.
Note 2. The shaded position indicates an user cable extraction port.

Note 3. The total of the X and Y strokes should be 1000mm or less.
Note 4. When the X-axis stroke is longer than 750mm, resonance of the ball screw may occur depending on the operation conditions (critical speed). In this case, reduce the speed setting on the program by referring to the maximum speeds shown in the table at the left.

SXYx 3 axes / ZS

Moving arm type | Whipover | Z-axis shaft vertical type

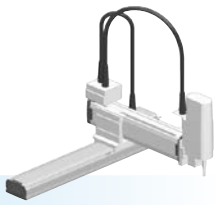

Ordering method

SXYx - S	-	[ ]	-	[ ]	-	[ ]	-	[ ]	- 15	-	[ ]	- RCX340-3	-	[ ]	-	[ ]	-	[ ]	-	[ ]	-	[ ]	-	[ ]
Model	Cable	Combination	X-axis stroke Note 1	Y-axis stroke Note 1	ZR-axis	Z-axis stroke	Cable	Controller / Number of controllable axes	Safety standard	Option A (OP.A)	Option B (OP.B)	Option C (OP.C)	Option D (OP.D)	Option E (OP.E)	Absolute battery
		M1 M3	15 to 85cm	15 to 35cm	ZS12 ZS6		3L: 3.5m 5L: 5m 10L: 10m								

Specify various controller setting items. RCX340 ▶ P.636

Note 1. The total of the X and Y strokes should be 1000mm or less.

Specification

	X-axis	Y-axis	Z-axis: ZS12	Z-axis: ZS6
Axis construction Note 1	F14H	F14	–	
AC servo motor output (W)	200	100	60	
Repeatability Note 2 (mm)	+/-0.01	+/-0.01	+/-0.02	
Drive system	Ball screw ϕ15	Ball screw ϕ15	Ball screw ϕ12	
Ball screw lead Note 3 (Deceleration ratio) (mm)	20	20	12	6
Maximum speed Note 4 (mm/sec)	1200	1200	1000	500
Moving range (mm)	150 to 850	150 to 350	150	
Robot cable length (m)	Standard: 3.5 Option: 5,10			

Note 1. Use caution that the flame machining (installation holes, tap holes) differs from single-axis robots'.
Note 2. Positioning repeatability in one direction.
Note 3. Leads not listed in the catalog are also available. Contact us for details.
Note 4. When the X-axis stroke is longer than 750mm, resonance of the ball screw may occur depending on the operation conditions (critical speed). In this case, reduce the speed setting on the program by referring to the maximum speeds shown in the table below.

Maximum payload (kg)

Y stroke (mm)	ZS12	ZS6
150 to 350	3	5

Controller

Controller	Operation method
RCX340	Programming / I/O point trace / Remote command / Operation using RS-232C communication

SXYx 3 axes / ZS M1

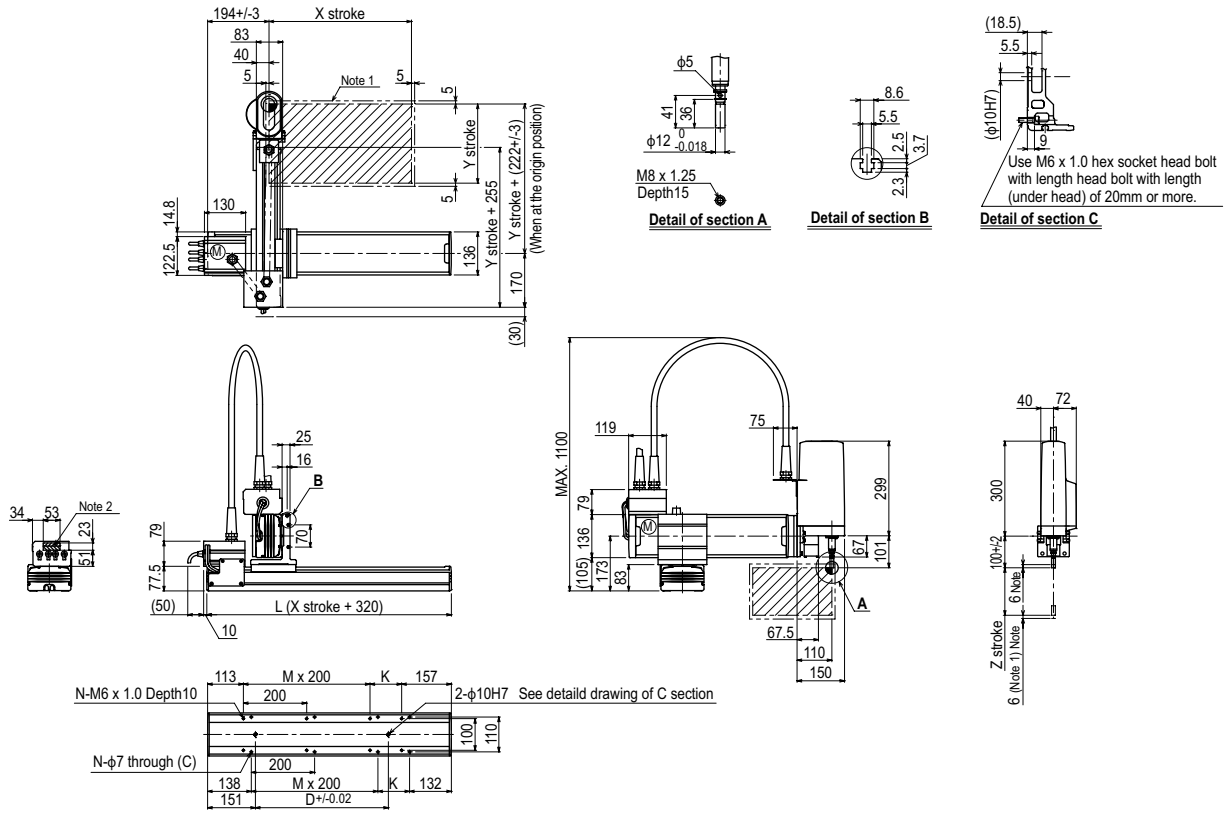

X stroke Note 3	150	250	350	450	550	650	750	850
L	470	570	670	770	870	970	1070	1170
K	200	100	200	100	200	100	200	100
D	240	240	420	420	600	600	780	960
M	0	1	1	2	2	3	3	4
N	4	6	6	8	8	10	10	12

Y stroke Note 3	150	250	350

Z stroke	150

Maximum speed for each stroke (mm/sec) Note 4				
X-axis	1200		960	780
Speed setting	–		80%	65%

Note 1. The moving range when returning to origin and the stop position when stopping by the mechanical stopper.
Note 2. The shaded position indicates an user cable extraction port.

Note 3. The total of the X and Y strokes should be 1000mm or less.
Note 4. When the X-axis stroke is longer than 750mm, resonance of the ball screw may occur depending on the operation conditions (critical speed). In this case, reduce the speed setting on the program by referring to the maximum speeds shown in the table at the left.

MXYx 2 axes

Moving arm type | Cable carrier

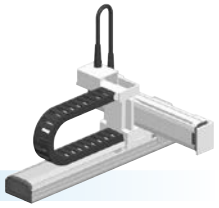

Ordering method

MXYx-	C	-		-		-		-	RCX320-2	-		-	R	-		-		-		-	
Model	Cable	Combination	X-axis stroke	Y-axis stroke	Cable	Controller / Number of controllable axes	Safety standard	Regeneratine unit	Option A (OP.A)	Option B (OP.B)	Vision System	Absolute battery
		M1 M3	25 to 125cm	15 to 55cm	3L: 3.5m 5L: 5m 10L: 10m							

Specify various controller setting items. RCX320 ▶ P.626

Specification

	X-axis	Y-axis
Axis construction Note 1	F17	F14H
AC servo motor output (W)	400	200
Repeatability Note 2 (mm)	+/-0.01	+/-0.01
Drive system	Ball screw ϕ20	Ball screw ϕ15
Ball screw lead Note 3 (Deceleration ratio) (mm)	20	20
Maximum speed Note 4 (mm/sec)	1200	1200
Moving range (mm)	250 to 1250	150 to 550
Robot cable length (m)	Standard: 3.5 Option: 5,10	

Note 1. Use caution that the flame machining (installation holes, tap holes) differs from single-axis robots'.
Note 2. Positioning repeatability in one direction.
Note 3. Leads not listed in the catalog are also available. Contact us for details.
Note 4. When the X-axis stroke is longer than 850mm, resonance of the ball screw may occur depending on the operation conditions (critical speed). In this case, reduce the speed setting on the program by referring to the maximum speeds shown in the table below.

Maximum payload (kg)

Y stroke (mm)	XY 2 axes
150 to 550	20

Controller

Controller	Operation method
RCX320-R	Programming / I/O point trace / Remote command / Operation using RS-232C communication

MXYx 2 axes M1

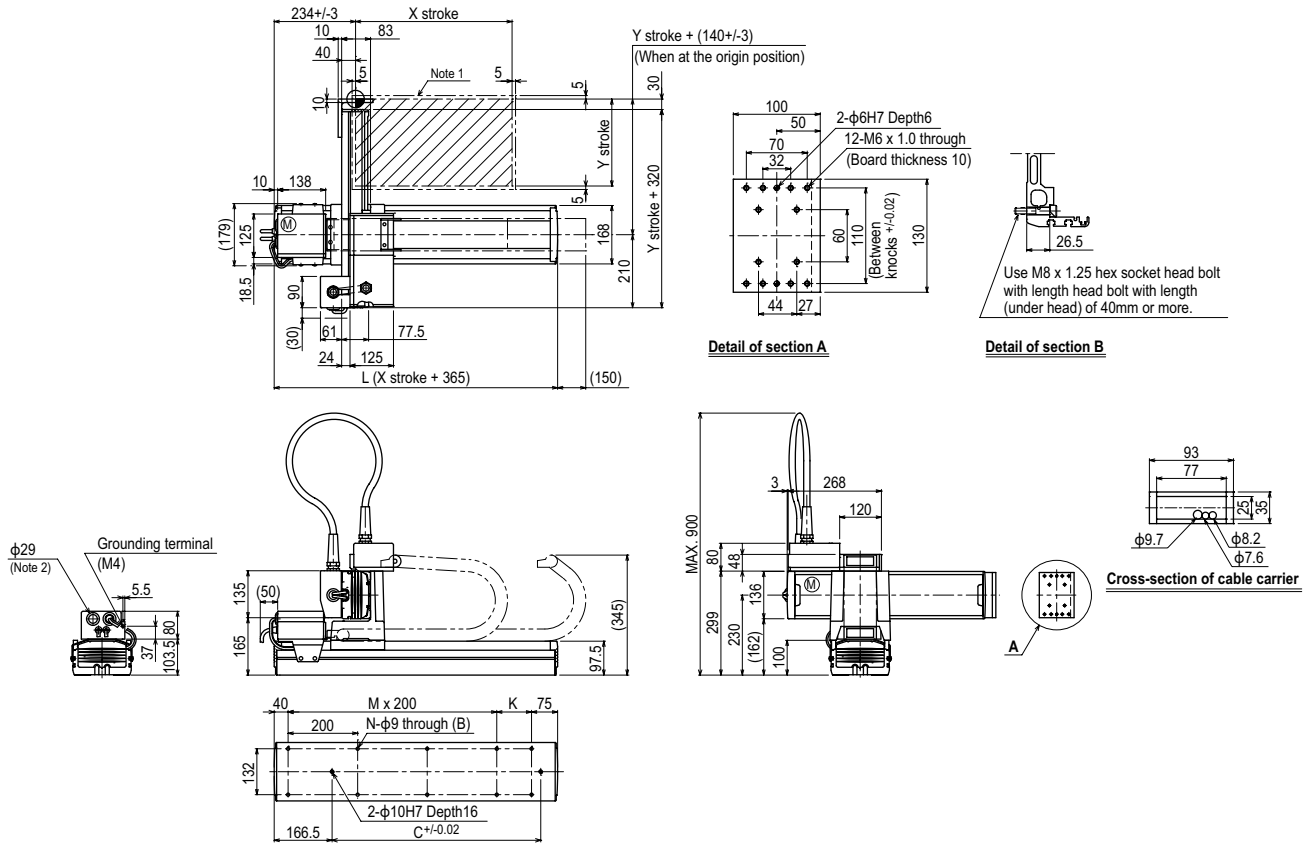

X stroke	250	350	450	550	650	750	850	950	1050	1150	1250
L	615	715	815	915	1015	1115	1215	1315	1415	1515	1615
K	100	200	100	200	100	200	100	200	100	200	100
D	240	420	600	600	780	780	960	960	1140	1140	1320
M	2	2	3	3	4	4	5	5	6	6	7
N	8	8	10	10	12	12	14	14	16	16	18

Y stroke	150	250	350	450	550
Maximum speed for each stroke (mm/sec) Note 3 — X-axis	1200				
Maximum speed for each stroke (mm/sec) Note 3 — Speed setting	–				

X stroke	850	950	1050	1150	1250
X-axis	960	840	720	600	480
Speed setting	80%	70%	60%	50%	40%

Note 1. The moving range when returning to origin and the stop position when stopping by the mechanical stopper.
Note 2. User cable extraction port.
Note 3. When the X-axis stroke is longer than 850mm, resonance of the ball screw may occur depending on the operation conditions (critical speed). In this case, reduce the speed setting on the program by referring to the maximum speeds shown in the table at the left.

MXYx 2 axes M3

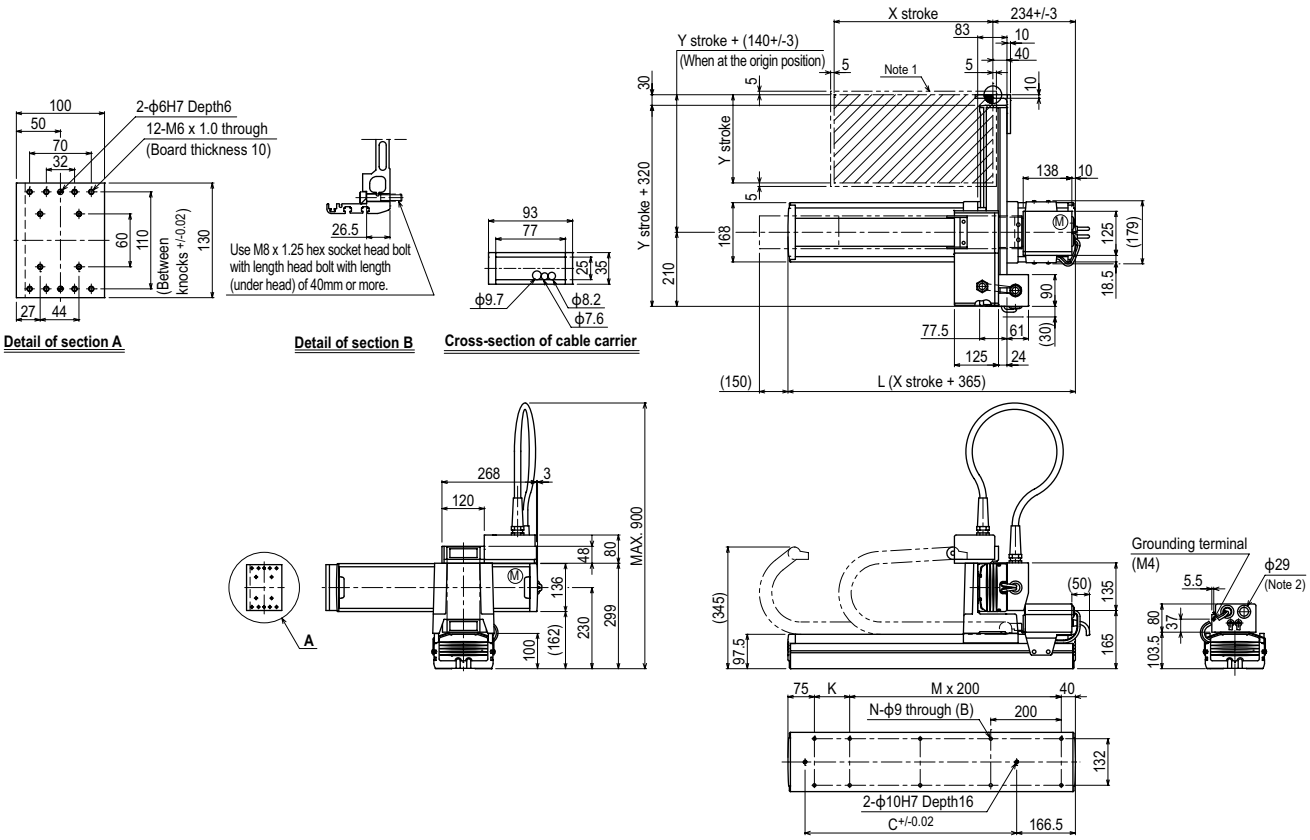

X stroke	250	350	450	550	650	750	850	950	1050	1150	1250
L	615	715	815	915	1015	1115	1215	1315	1415	1515	1615
K	100	200	100	200	100	200	100	200	100	200	100
D	240	420	600	600	780	780	960	960	1140	1140	1320
M	2	2	3	3	4	4	5	5	6	6	7
N	8	8	10	10	12	12	14	14	16	16	18

Y stroke	150	250	350	450	550

Maximum speed for each stroke (mm/sec) Note 3								
	X-axis	1200			960	840	720	600	480
	Speed setting	–			80%	70%	60%	50%	40%

Note 1. The moving range when returning to origin and the stop position when stopping by the mechanical stopper.
Note 2. User cable extraction port.

Note 3. When the X-axis stroke is longer than 850mm, resonance of the ball screw may occur depending on the operation conditions (critical speed). In this case, reduce the speed setting on the program by referring to the maximum speeds shown in the table at the left.

Controller RCX320 ▶ 626

MXYx 3 axes / ZFL20/10

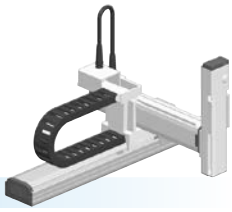

● Moving arm type ● Cable carrier ● Z-axis: clamped base / moving table type (200W)

Ordering method

MXYx - C - [ ] - [ ] - [ ] - [ ] - [ ] - [ ] - RCX340-3 - [ ] - [ ] - [ ] - [ ] - [ ] - [ ] - [ ]

Model	Cable	Combination	X-axis stroke	Y-axis stroke	ZR-axis	Z-axis stroke	Cable	Controller / Number of controllable axes	Safety standard	Option A (OP.A)	Option B (OP.B)	Option C (OP.C)	Option D (OP.D)	Option E (OP.E)	Absolute battery
		M1 M3	25 to 125cm	15 to 55cm	ZFL20 ZFL10	15 to 35cm	3L: 3.5m 5L: 5m 10L: 10m								

Specify various controller setting items. RCX340 ▶ P.636

Specification

	X-axis	Y-axis	Z-axis: ZFL20	Z-axis: ZFL10
Axis construction Note 1	F17	F14H	F10H-BK	
AC servo motor output (W)	400	200	200	
Repeatability Note 2 (mm)	+/-0.01	+/-0.01	+/-0.01	
Drive system	Ball screw ϕ20	Ball screw ϕ15	Ball screw ϕ15	
Ball screw lead Note 3 (Deceleration ratio) (mm)	20	20	20	10
Maximum speed Note 4 (mm/sec)	1200	1200	1200	600
Moving range (mm)	250 to 1250	150 to 550	150 to 350	
Robot cable length (m)	Standard: 3.5 Option: 5,10			

Note. The standard types are ZFL with higher rigidity as compared with ZF types which are conventional standard types. When you need the ZF type, please consult YAMAHA.
Note 1. Use caution that the flame machining (installation holes, tap holes) differs from single-axis robots'.
Note 2. Positioning repeatability in one direction.
Note 3. Leads not listed in the catalog are also available. Contact us for details.
Note 4. When the X-axis stroke is longer than 850mm, resonance of the ball screw may occur depending on the operation conditions (critical speed). In this case, reduce the speed setting on the program by referring to the maximum speeds shown in the table below.

Maximum payload (kg)

Y stroke (mm)	Z stroke (mm) ZFL20 150	ZFL20 250	ZFL20 350	ZFL10 150	ZFL10 250	ZFL10 350
150 to 550	8	8	8	12	11	10

Controller

Controller	Operation method
RCX340	Programming / I/O point trace / Remote command / Operation using RS-232C communication

MXYx 3 axes / ZFL20/10 M1

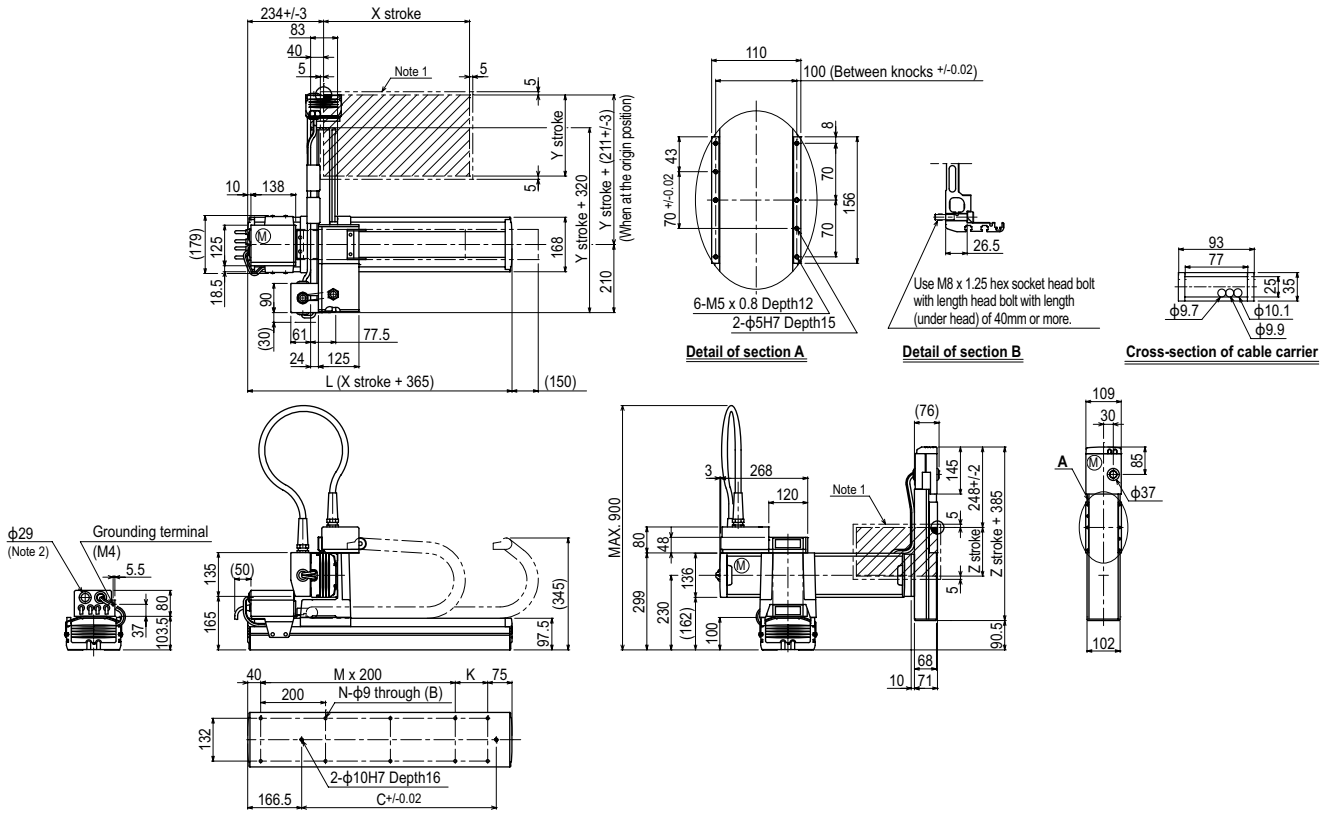

X stroke	250	350	450	550	650	750	850	950	1050	1150	1250
L	615	715	815	915	1015	1115	1215	1315	1415	1515	1615
K	100	200	100	200	100	200	100	200	100	200	100
C	240	420	600	600	780	780	960	960	1140	1140	1320
M	2	2	3	3	4	4	5	5	6	6	7
N	8	8	10	10	12	12	14	14	16	16	18

Y stroke	150	250	350	450	550
Z stroke	150	250	350		

Maximum speed for each stroke (mm/sec) Note 3								
X-axis	1200			960	840	720	600	480
Speed setting	–			80%	70%	60%	50%	40%

Note 1. The moving range when returning to origin and the stop position when stopping by the mechanical stopper.
Note 2. User cable extraction port.
Note 3. When the X-axis stroke is longer than 850mm, resonance of the ball screw may occur depending on the operation conditions (critical speed). In this case, reduce the speed setting on the program by referring to the maximum speeds shown in the table at the left.

Controller RCX340 ▶ 636

MXYx 3 axes / ZFH

Moving arm type | Cable carrier | Z-axis: clamped table / moving base type (200W)

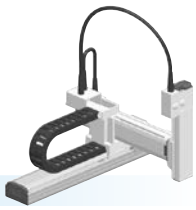

Ordering method

MXYx - C - [ ] - [ ] - [ ] - ZFH - [ ] - [ ] - RCX340-3 - [ ] - [ ] - [ ] - [ ] - [ ] - [ ] - [ ]

Model	Cable	Combination	X-axis stroke	Y-axis stroke	ZR-axis	Z-axis stroke	Cable	Controller / Number of controllable axes	Safety standard	Option A (OP.A)	Option B (OP.B)	Option C (OP.C)	Option D (OP.D)	Option E (OP.E)	Absolute battery
		M1 M3	25 to 125cm	15 to 55cm		15 to 35cm	3L: 3.5m 5L: 5m 10L: 10m								

Specify various controller setting items. RCX340 ▶ P636

Specification

	X-axis	Y-axis	Z-axis
Axis construction Note 1	F17	F14H	F10H-BK
AC servo motor output (W)	400	200	200
Repeatability Note 2 (mm)	+/-0.01	+/-0.01	+/-0.01
Drive system	Ball screw ϕ20	Ball screw ϕ15	Ball screw ϕ15
Ball screw lead Note 3 (Deceleration ratio) (mm)	20	20	10
Maximum speed Note 4 (mm/sec)	1200	1200	600
Moving range (mm)	250 to 1250	150 to 550	150 to 350
Robot cable length (m)	Standard: 3.5 Option: 5,10		

Note. The standard types are ZFH with higher rigidity as compared with ZF types which are conventional standard types. When you need the ZF type, please consult YAMAHA.
Note 1. Use caution that the flame machining (installation holes, tap holes) differs from single-axis robots'.
Note 2. Positioning repeatability in one direction.
Note 3. Leads not listed in the catalog are also available. Contact us for details.
Note 4. When the X-axis stroke is longer than 850mm, resonance of the ball screw may occur depending on the operation conditions (critical speed). In this case, reduce the speed setting on the program by referring to the maximum speeds shown in the table below.

Maximum payload (kg)

	Z stroke (mm)		
Y stroke (mm)	150	250	350
150 to 550	12	11	10

Controller

Controller	Operation method
RCX340	Programming / I/O point trace / Remote command / Operation using RS-232C communication

MXYx 3 axes / ZFH M1

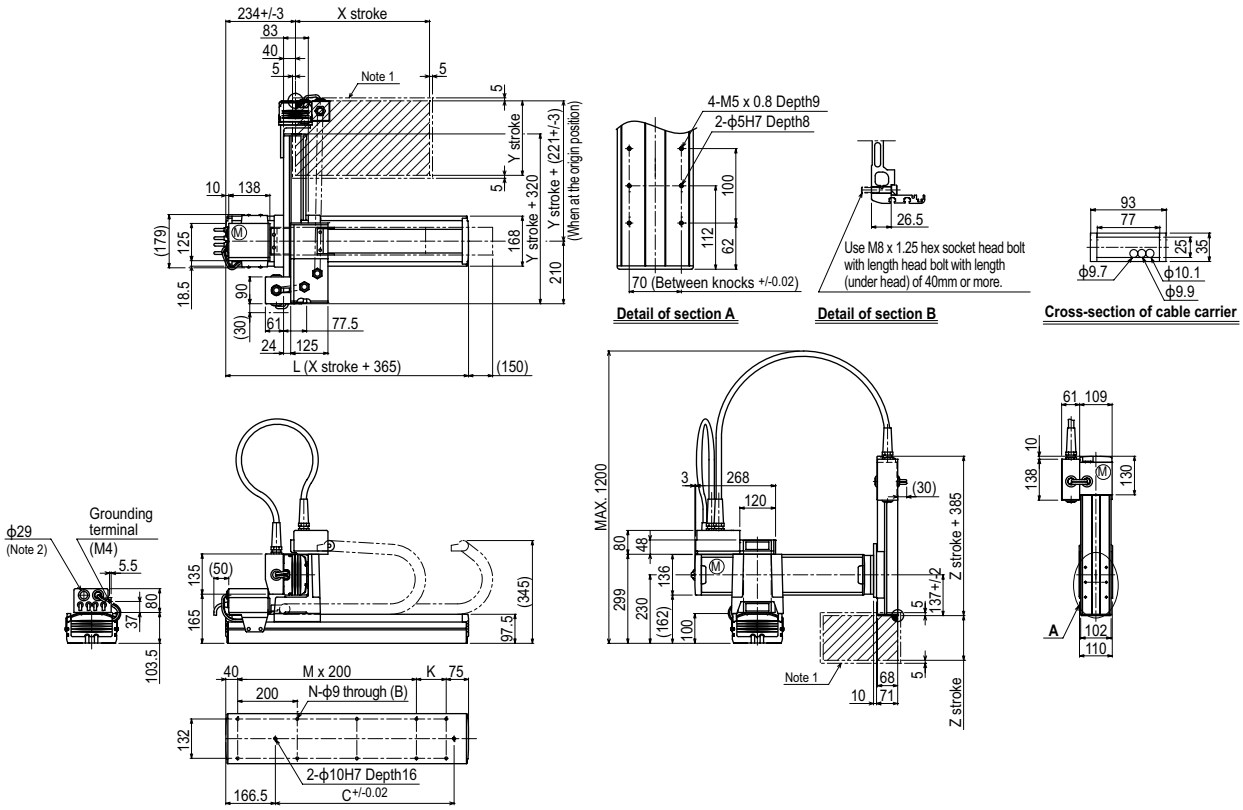

X stroke Note 3	250	350	450	550	650	750	850	950	1050	1150	1250
L	615	715	815	915	1015	1115	1215	1315	1415	1515	1615
K	100	200	100	200	100	200	100	200	100	200	100
D	240	420	600	600	780	780	960	960	1140	1140	1320
M	2	2	3	3	4	4	5	5	6	6	7
N	8	8	10	10	12	12	14	14	16	16	18

Y stroke Note 3	150	250	350	450	550
Z stroke	150	250	350		

Maximum speed for each stroke (mm/sec) Note 4							
X-axis	1200	960	840	720	600	480
Speed setting	–	80%	70%	60%	50%	40%

Note 1. The moving range when returning to origin and the stop position when stopping by the mechanical stopper.
Note 2. User cable extraction port.

Note 3. The total of the Y and Z strokes should be 800mm or less.
Note 4. When the X-axis stroke is longer than 850mm, resonance of the ball screw may occur depending on the operation conditions (critical speed). In this case, reduce the speed setting on the program by referring to the maximum speeds shown in the table at the left.

Controller RCX340 ▶ 636

HXYx 2 axes

Moving arm type | Cable carrier

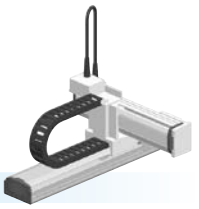

Ordering method

HXYx - C	-		-		-		-	RCX320-2	-		-		-		-		-	
Model	Cable	Combination	X-axis stroke	Y-axis stroke	Cable	Controller / Number of controllable axes	Safety standard	Regeneratine unit	Option A (OP.A)	Option B (OP.B)	Vision System	Absolute battery
		M1 M3	25 to 125cm	25 to 65cm	3L: 3.5m 5L: 5m 10L: 10m			R				

Specify various controller setting items. RCX320 ▶ P.626

Specification

	X-axis	Y-axis
Axis construction Note 1	F20	F17
AC servo motor output (W)	600	400
Repeatability Note 2 (mm)	+/-0.01	+/-0.01
Drive system	Ball screw ϕ20	Ball screw ϕ20
Ball screw lead Note 3 (Deceleration ratio) (mm)	20	20
Maximum speed Note 4 (mm/sec)	1200	1200
Moving range (mm)	250 to 1250	250 to 650
Robot cable length (m)	Standard: 3.5 Option: 5,10	

Note 1. Use caution that the flame machining (installation holes, tap holes) differs from single-axis robots'.
Note 2. Positioning repeatability in one direction.
Note 3. Leads not listed in the catalog are also available. Contact us for details.
Note 4. When the X-axis stroke is longer than 850mm, resonance of the ball screw may occur depending on the operation conditions (critical speed). In this case, reduce the speed setting on the program by referring to the maximum speeds shown in the table below.

Maximum payload (kg)

Y stroke (mm)	XY 2 axes
250 to 650	30

Controller

Controller	Operation method
RCX320-R	Programming / I/O point trace / Remote command / Operation using RS-232C communication

HXYx 2 axes M1

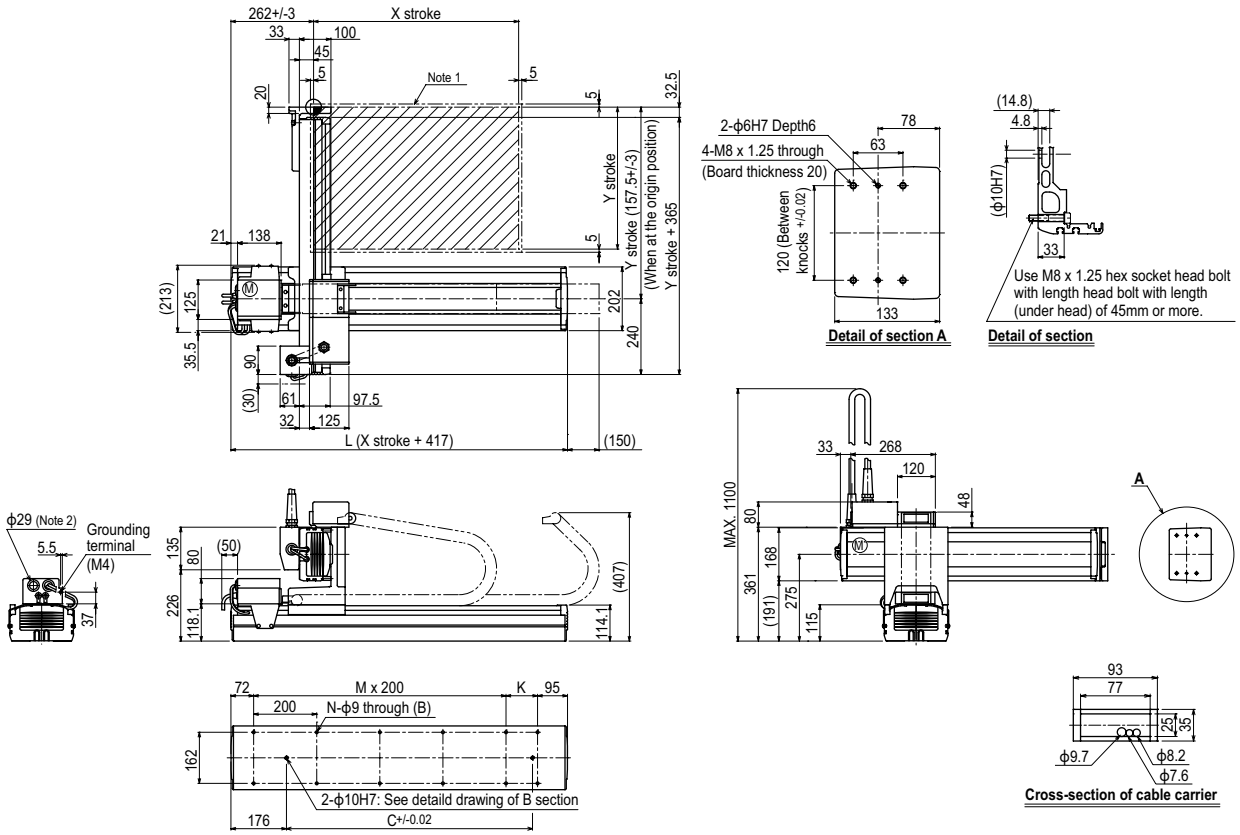

X stroke	250	350	450	550	650	750	850	950	1050	1150	1250
L	667	767	867	967	1067	1167	1267	1367	1467	1567	1667
K	100	200	100	200	100	200	100	200	100	200	100
C	420	420	600	600	780	780	960	960	1140	1320	1320
M	2	2	3	3	4	4	5	5	6	6	7
N	8	8	10	10	12	12	14	14	16	16	18

Y stroke	250	350	450	550	650
Maximum speed for each stroke (mm/sec) Note 3 — X-axis	1200				
Maximum speed for each stroke (mm/sec) Note 3 — Speed setting	–				

X stroke	850	950	1050	1150	1250
Maximum speed for each stroke (mm/sec) Note 3 — X-axis	960	840	720	600	480
Maximum speed for each stroke (mm/sec) Note 3 — Speed setting	80%	70%	60%	50%	40%

Note 1. The moving range when returning to origin and the stop position when stopping by the mechanical stopper.
Note 2. User cable extraction port.
Note 3. When the X-axis stroke is longer than 850mm, resonance of the ball screw may occur depending on the operation conditions (critical speed). In this case, reduce the speed setting on the program by referring to the maximum speeds shown in the table at the left.

HXYx 2 axes M3

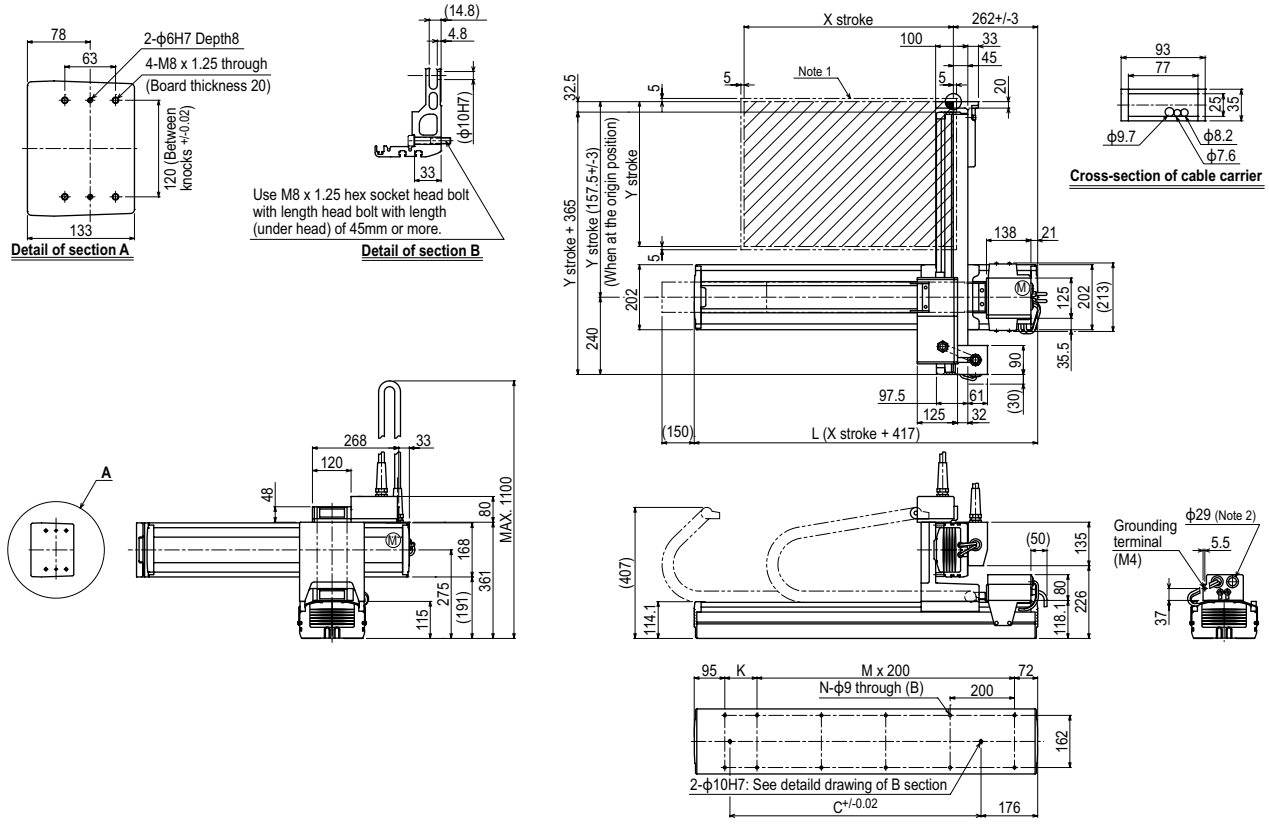

X stroke	250	350	450	550	650	750	850	950	1050	1150	1250
L	667	767	867	967	1067	1167	1267	1367	1467	1567	1667
K	100	200	100	200	100	200	100	200	100	200	100
C	420	420	600	600	780	780	960	960	1140	1320	1320
M	2	2	3	3	4	4	5	5	6	6	7
N	8	8	10	10	12	12	14	14	16	16	18

Y stroke	250	350	450	550	650

Maximum speed for each stroke (mm/sec) Note 3								
	X-axis	1200	960	840	720	600	480
	Speed setting	–	80%	70%	60%	50%	40%

Note 1. The moving range when returning to origin and the stop position when stopping by the mechanical stopper.
Note 2. User cable extraction port.

Note 3. When the X-axis stroke is longer than 850mm, resonance of the ball screw may occur depending on the operation conditions (critical speed). In this case, reduce the speed setting on the program by referring to the maximum speeds shown in the table at the left.

HXYx 3 axes / ZH

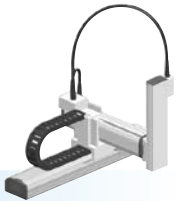

● Moving arm type ● Cable carrier ● Z-axis: clamped table / moving base type (200W)

Ordering method

HXYx -	C -	[ ] -	[ ] -	[ ] -	ZH -	[ ] -	[ ] -	RCX340-3 -	[ ] -	[ ] -	[ ] -	[ ] -	[ ] -	[ ] -	[ ]
Model	Cable	Combination	X-axis stroke	Y-axis stroke	ZR-axis	Z-axis stroke	Cable	Controller / Number of controllable axes	Safety standard	Option A (OP.A)	Option B (OP.B)	Option C (OP.C)	Option D (OP.D)	Option E (OP.E)	Absolute battery
		M1 M3	25 to 125cm	25 to 65cm		25 to 55cm	3L: 3.5m 5L: 5m 10L: 10m								

Specify various controller setting items. RCX340 ▶ P.636

Specification

	X-axis	Y-axis	Z-axis
Axis construction Note 1	F20	F17	F14H-BK
AC servo motor output (W)	600	400	200
Repeatability Note 2 (mm)	+/-0.01	+/-0.01	+/-0.01
Drive system	Ball screw ϕ20	Ball screw ϕ20	Ball screw ϕ15
Ball screw lead Note 3 (Deceleration ratio) (mm)	20	20	5
Maximum speed Note 4 (mm/sec)	1200	1200	300
Moving range (mm)	250 to 1250	250 to 650	250 to 550
Robot cable length (m)	Standard: 3.5 Option: 5,10		

Note 1. Use caution that the flame machining (installation holes, tap holes) differs from single-axis robots'.
Note 2. Positioning repeatability in one direction.
Note 3. Leads not listed in the catalog are also available. Contact us for details.
Note 4. When the X-axis stroke is longer than 850mm, resonance of the ball screw may occur depending on the operation conditions (critical speed). In this case, reduce the speed setting on the program by referring to the maximum speeds shown in the table below.

Maximum payload (kg)

	Z stroke (mm)			
Y stroke (mm)	250	350	450	550
250	18	18	18	18
350	18	18	18	18
450	18	18	18	18
550	18	17	16	15
650	18	17	16	15

Controller

Controller	Operation method
RCX340	Programming / I/O point trace / Remote command / Operation using RS-232C communication

HXYx 3 axes / ZH M1

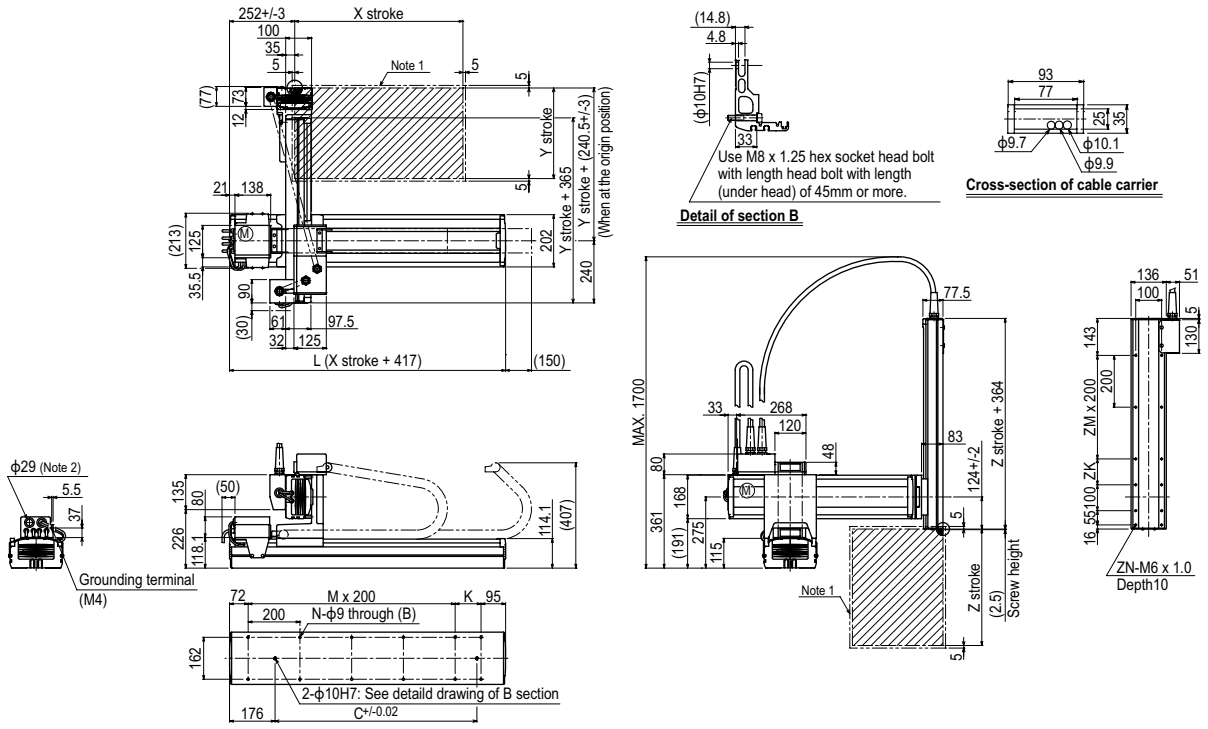

X stroke	250	350	450	550	650	750	850	950	1050	1150	1250
L	667	767	867	967	1067	1167	1267	1367	1467	1567	1667
K	100	200	100	200	100	200	100	200	100	200	100
C	420	420	600	600	780	780	960	960	1140	1320	1320
M	2	2	3	3	4	4	5	5	6	6	7
N	8	8	10	10	12	12	14	14	16	16	18

Y stroke	250	350	450	550	650

Z stroke	250	350	450	550
ZK	100	200	100	200
ZM	1	1	2	2
ZN	10	10	12	12

Maximum speed for each stroke (mm/sec) Note 3							
X-axis	1200	960	840	720	600	480
Speed setting	–	80%	70%	60%	50%	40%

Note 1. The moving range when returning to origin and the stop position when stopping by the mechanical stopper.
Note 2. User cable extraction port.

Note 3. When the X-axis stroke is longer than 850mm, resonance of the ball screw may occur depending on the operation conditions (critical speed). In this case, reduce the speed setting on the program by referring to the maximum speeds shown in the table at the left.

Controller RCX340 ▶ 636

MEMO

SXYx 2 axes

Pole type Whipover

Ordering method

SXYx -	S -	P1 -	[ ] -	[ ] -	[ ] -	RCX320-2 -	[ ] -	[ ] -	[ ] -	[ ] -	[ ]
Model	Cable	Combination	X-axis stroke Note 1: 15 to 85cm	Y-axis stroke Note 1: 15 to 55cm	Cable: 3L: 3.5m, 5L: 5m, 10L: 10m	Controller / Number of controllable axes	Safety standard	Option A (OP.A)	Option B (OP.B)	Vision System	Absolute battery

Specify various controller setting items. RCX320 ▶ P.626

Note 1.The total of the X and Y strokes should be 1100mm or less.

Specification

	X-axis	Y-axis
Axis construction Note 1	F14H	F14-BK
AC servo motor output (W)	200	100
Repeatability Note 2 (mm)	+/-0.01	+/-0.01
Drive system	Ball screw ϕ15	Ball screw ϕ15
Ball screw lead Note 3 (Deceleration ratio) (mm)	20	10
Maximum speed Note 4 (mm/sec)	1200	600
Moving range (mm)	150 to 850	150 to 550
Robot cable length (m)	Standard: 3.5 Option: 5,10	

Note 1. Use caution that the flame machining (installation holes, tap holes) differs from single-axis robots'.
Note 2. Positioning repeatability in one direction.
Note 3. Leads not listed in the catalog are also available. Contact us for details.
Note 4. When the X-axis stroke is longer than 750mm, resonance of the ball screw may occur depending on the operation conditions (critical speed). In this case, reduce the speed setting on the program by referring to the maximum speeds shown in the table below.

Maximum payload (kg)

Y stroke (mm)	XY 2 axes
150 to 550	8

Controller

Controller	Operation method
RCX320	Programming / I/O point trace / Remote command / Operation using RS-232C communication

SXYx 2 axes P1

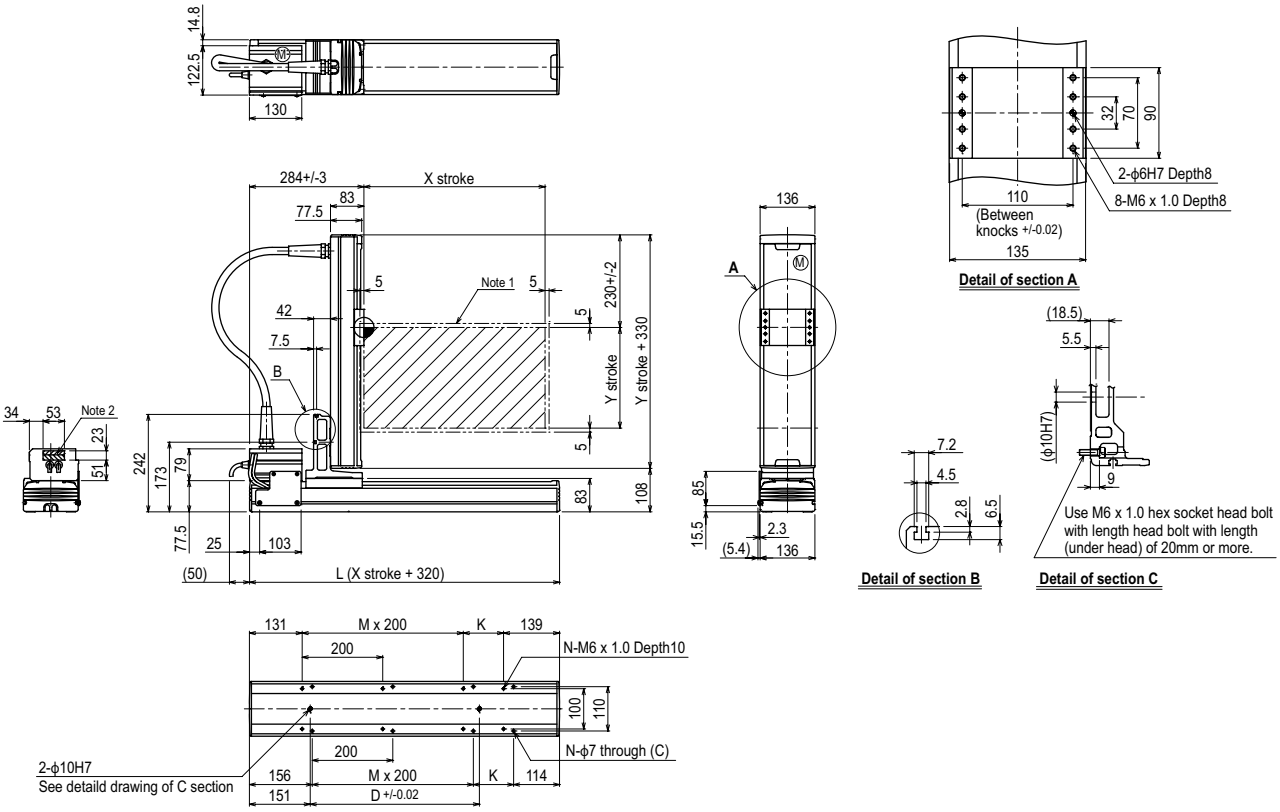

X stroke Note 3	150	250	350	450	550	650	750	850
L	470	570	670	770	870	970	1070	1170
K	200	100	200	100	200	100	200	100
D	240	240	420	420	600	600	780	780
M	0	1	1	2	2	3	3	4
N	4	6	6	8	8	10	10	12

Y stroke Note 3	150	250	350	450	550

Maximum speed for each stroke (mm/sec) Note 4					
	X-axis	1200		960	780
	Speed setting	–		80%	65%

Note 1. The moving range when returning to origin and the stop position when stopping by the mechanical stopper.
Note 2. The shaded position indicates an user cable extraction port.

Note 3. The total of the X and Y strokes should be 1100mm or less.
Note 4. When the X-axis stroke is longer than 750mm, resonance of the ball screw may occur depending on the operation conditions (critical speed). In this case, reduce the speed setting on the program by referring to the maximum speeds shown in the table at the left.

MXYx 2 axes

Pole type Cable carrier

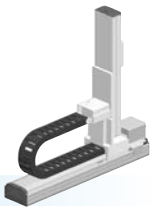

Ordering method

MXYx - C - P2	-		-		-		-	RCX320-2	-		-	R	-		-		-		-	
Model	-	Cable	-	Combination	-	X-axis stroke 25 to 125cm	-	Y-axis stroke 15 to 65cm	-	Cable 3L: 3.5m 5L: 5m 10L: 10m	-	Controller / Number of controllable axes	-	Safety standard	-	Regeneratine unit	-	Option A (OP.A)	-	Option B (OP.B)	-	Vision System	-	Absolute battery

Specify various controller setting items. RCX320 ▶ P.626

Specification

	X-axis	Y-axis
Axis construction Note 1	F17	F14H-BK
AC servo motor output (W)	400	200
Repeatability Note 2 (mm)	+/-0.01	+/-0.01
Drive system	Ball screw ϕ20	Ball screw ϕ15
Ball screw lead Note 3 (Deceleration ratio) (mm)	20	10
Maximum speed Note 4 (mm/sec)	1200	600
Moving range (mm)	250 to 1250	150 to 650
Robot cable length (m)	Standard: 3.5 Option: 5,10	

Note 1. Use caution that the flame machining (installation holes, tap holes) differs from single-axis robots'.
Note 2. Positioning repeatability in one direction.
Note 3. Leads not listed in the catalog are also available. Contact us for details.
Note 4. When the X-axis stroke is longer than 850mm, resonance of the ball screw may occur depending on the operation conditions (critical speed). In this case, reduce the speed setting on the program by referring to the maximum speeds shown in the table below.

Maximum payload (kg)

Y stroke (mm)	XY 2 axes
150 to 650	20

Controller

Controller	Operation method
RCX320-R	Programming / I/O point trace / Remote command / Operation using RS-232C communication

MXYx 2 axes P2

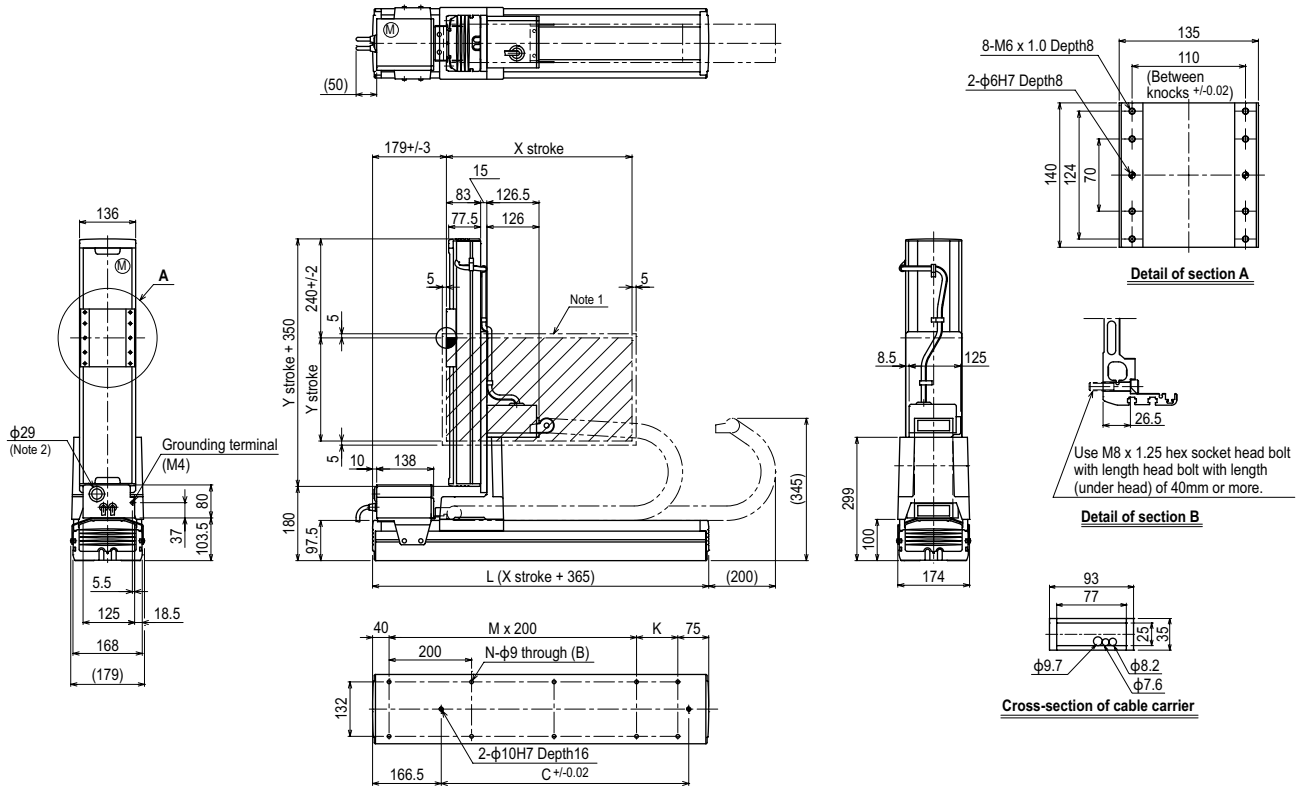

X stroke	250	350	450	550	650	750	850	950	1050	1150	1250
L	615	715	815	915	1015	1115	1215	1315	1415	1515	1615
K	100	200	100	200	100	200	100	200	100	200	100
C	240	420	600	600	780	780	960	960	1140	1140	1320
M	2	2	3	3	4	4	5	5	6	6	7
N	8	8	10	10	12	12	14	14	16	16	18

Y stroke	150	250	350	450	550	650
Maximum speed for each stroke (mm/sec) Note 3 — X-axis	1200			960	840	720	600	480
Maximum speed for each stroke (mm/sec) Note 3 — Speed setting	–			80%	70%	60%	50%	40%

Note 1. The moving range when returning to origin and the stop position when stopping by the mechanical stopper.
Note 2. User cable extraction port.

Note 3. When the X-axis stroke is longer than 850mm, resonance of the ball screw may occur depending on the operation conditions (critical speed). In this case, reduce the speed setting on the program by referring to the maximum speeds shown in the table at the left.

MXYx 2 axes

Pole type Whipover

Ordering method

MXYx -	S -	P1 -	[ ] -	[ ] -	[ ] -	RCX320-2 -	[ ] -	R -	[ ] -	[ ] -	[ ] -	[ ]
Model	Cable	Combination	X-axis stroke Note 1: 25 to 95cm	Y-axis stroke Note 1: 15 to 65cm	Cable: 3L: 3.5m, 5L: 5m, 10L: 10m	Controller / Number of controllable axes	Safety standard	Regenerative unit	Option A (OP.A)	Option B (OP.B)	Vision System	Absolute battery

Specify various controller setting items. RCX320 ▶ P626

Note 1. The total of the X and Y strokes should be 1100mm or less.

Specification

	X-axis	Y-axis
Axis construction Note 1	F17	F14H-BK
AC servo motor output (W)	400	200
Repeatability Note 2 (mm)	+/-0.01	+/-0.01
Drive system	Ball screw ϕ20	Ball screw ϕ15
Ball screw lead Note 3 (Deceleration ratio) (mm)	20	10
Maximum speed Note 4 (mm/sec)	1200	600
Moving range (mm)	250 to 950	150 to 650
Robot cable length (m)	Standard: 3.5 Option: 5,10	

Note 1. Use caution that the flame machining (installation holes, tap holes) differs from single-axis robots'.
Note 2. Positioning repeatability in one direction.
Note 3. Leads not listed in the catalog are also available. Contact us for details.
Note 4. When the X-axis stroke is longer than 850mm, resonance of the ball screw may occur depending on the operation conditions (critical speed). In this case, reduce the speed setting on the program by referring to the maximum speeds shown in the table below.

Maximum payload (kg)

Y stroke (mm)	XY 2 axes
150 to 650	20

Controller

Controller	Operation method
RCX320-R	Programming / I/O point trace / Remote command / Operation using RS-232C communication

MXYx 2 axes P1

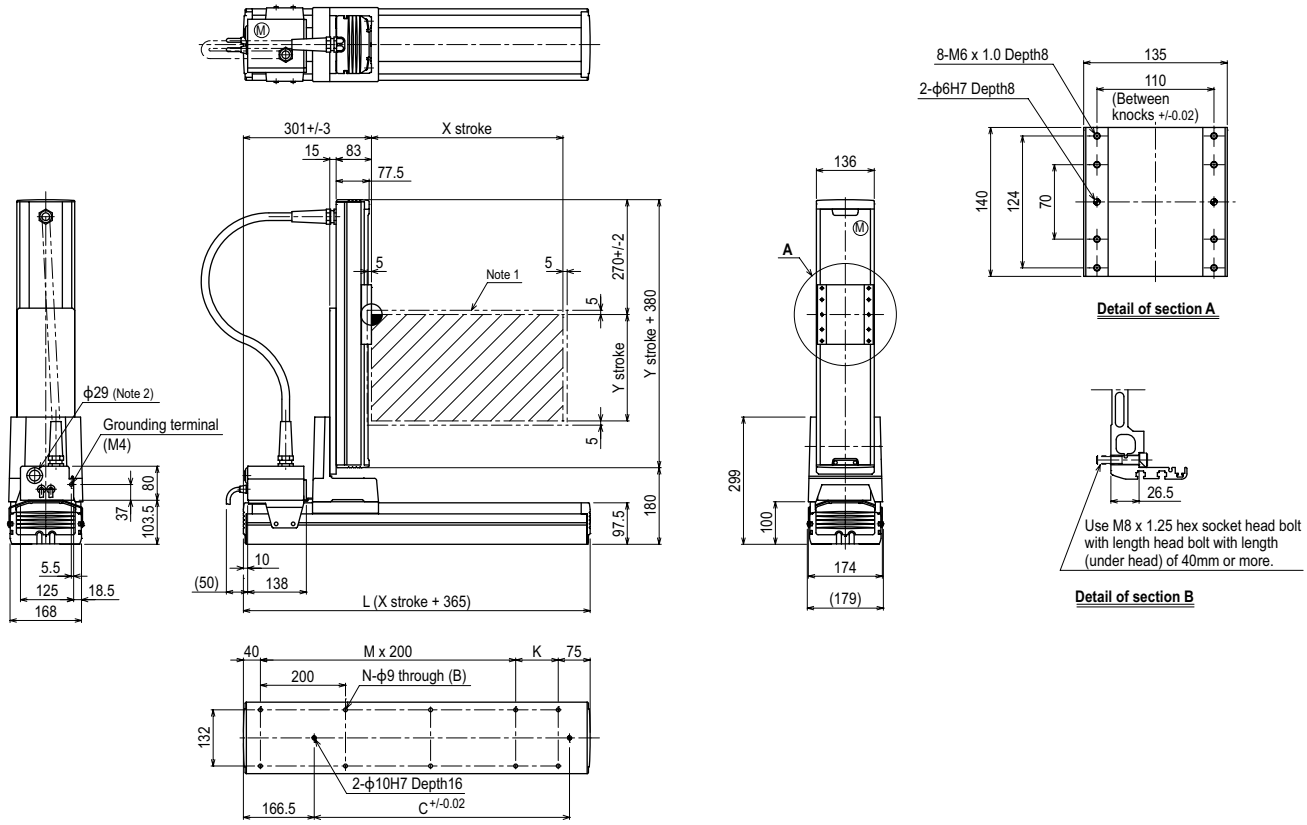

X stroke Note 3	250	350	450	550	650	750	850	950
L	615	715	815	915	1015	1115	1215	1315
K	100	200	100	200	100	200	100	200
C	240	420	600	600	780	780	960	960
M	2	2	3	3	4	4	5	5
N	8	8	10	10	12	12	14	14

Y stroke Note 3	150	250	350	450	550	650

Maximum speed for each stroke (mm/sec) Note 4					
	X-axis	1200		960	840
	Speed setting	–		80%	70%

Note 1. The moving range when returning to origin and the stop position when stopping by the mechanical stopper.
Note 2. User cable extraction port.

Note 3. The total of the X and Y strokes should be 1100mm or less.
Note 4. When the X-axis stroke is longer than 850mm, resonance of the ball screw may occur depending on the operation conditions (critical speed). In this case, reduce the speed setting on the program by referring to the maximum speeds shown in the table at the left.

MXYx 3 axes / ZPMH

Pole type | Cable carrier | Z-axis: Clamped table / moving base type (200W) for Pole type

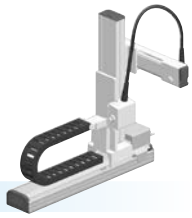

Ordering method

MXYx - C - P2 -							- RCX340-3 -						
Model	Cable	Combi-nation	X-axis stroke 25 to 125cm	Y-axis stroke 15 to 65cm	ZR-axis ZPMHL ZPMHR	Z-axis stroke 15 to 35cm	Cable 3L: 3.5m 5L: 5m 10L: 10m	Controller / Number of controllable axes	Safety standard	Option A (OP.A)	Option B (OP.B)	Option C (OP.C)	Option D (OP.D)	Option E (OP.E)	Absolute battery

Specify various controller setting items. RCX340 ▶ P.636

Specification

	X-axis	Y-axis	Z-axis
Axis construction Note 1	F17	F14H-BK	F10H-BK
AC servo motor output (W)	400	200	200
Repeatability Note 2 (mm)	+/-0.01	+/-0.01	+/-0.01
Drive system	Ball screw ϕ20	Ball screw ϕ15	Ball screw ϕ15
Ball screw lead Note 3 (Deceleration ratio) (mm)	20	10	20
Maximum speed Note 4 (mm/sec)	1200	600	1200
Moving range (mm)	250 to 1250	150 to 650	150 to 350
Robot cable length (m)	Standard: 3.5 Option: 5,10		

Note. The standard types are ZPMH with higher rigidity as compared with ZPM types which are conventional standard types. When you need the ZPM type, please consult YAMAHA.
Note 1. Use caution that the flame machining (installation holes, tap holes) differs from single-axis robots'.
Note 2. Positioning repeatability in one direction.
Note 3. Leads not listed in the catalog are also available. Contact us for details.
Note 4. When the X-axis stroke is longer than 850mm, resonance of the ball screw may occur depending on the operation conditions (critical speed). In this case, reduce the speed setting on the program by referring to the maximum speeds shown in the table below.

Maximum payload (kg)

	Z stroke (mm)		
Y stroke (mm)	150	250	350
150 to 650	10	9	8

Controller

Controller	Operation method
RCX340	Programming / I/O point trace / Remote command / Operation using RS-232C communication

MXYx 3 axes / ZPMHL P2

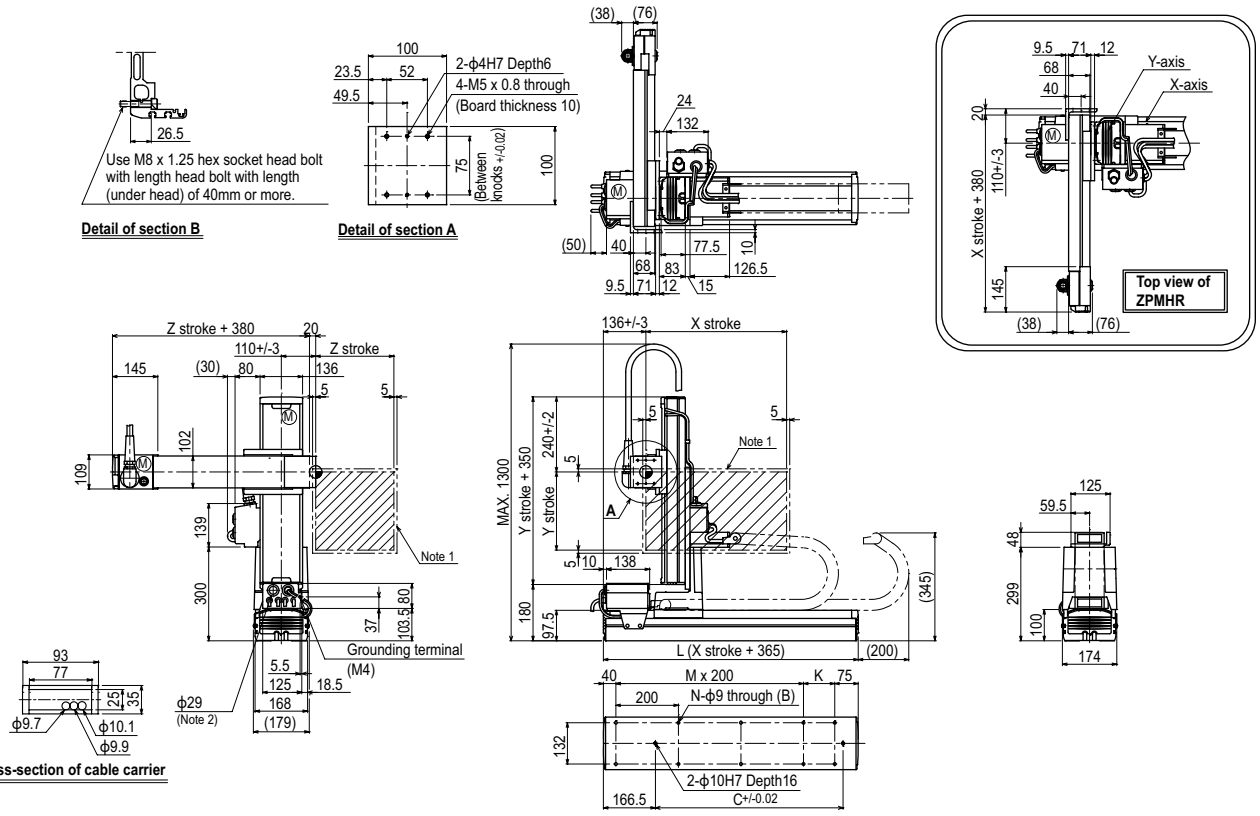

X stroke	250	350	450	550	650	750	850	950	1050	1150	1250
L	615	715	815	915	1015	1115	1215	1315	1415	1515	1615
K	100	200	100	200	100	200	100	200	100	200	100
C	240	420	600	600	780	780	960	960	1140	1140	1320
M	2	2	3	3	4	4	5	5	6	6	7
N	8	8	10	10	12	12	14	14	16	16	18

Y stroke	150	250	350	450	550	650

Z stroke	150	250	350

Maximum speed for each stroke (mm/sec) Note 3								
X-axis	1200			960	840	720	600	480
Speed setting	–			80%	70%	60%	50%	40%

Note 1. The moving range when returning to origin and the stop position when stopping by the mechanical stopper.
Note 2. User cable extraction port.
Note 3. This figure shows the combination for ZPMHL. For the combination for ZPMHR, see the top view in the figure.
Note 4. When the X-axis stroke is longer than 850mm, resonance of the ball screw may occur depending on the operation conditions (critical speed). In this case, reduce the speed setting on the program by referring to the maximum speeds shown in the table at the left.

HXYx 2 axes

Pole type Cable carrier

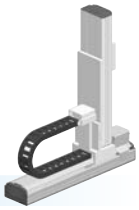

Ordering method

HXYx -	C -	P2 -	[ ] -	[ ] -	[ ] -	RCX320-2 -	[ ] -	R -	[ ] -	[ ] -	[ ] -	[ ]
Model	Cable	Combination	X-axis stroke (25 to 125cm)	Y-axis stroke (25 to 105cm)	Cable (3L: 3.5m, 5L: 5m, 10L: 10m)	Controller / Number of controllable axes	Safety standard	Regeneratine unit	Option A (OP.A)	Option B (OP.B)	Vision System	Absolute battery

Specify various controller setting items. RCX320 ▶ P.626

Specification

	X-axis	Y-axis
Axis construction Note 1	F20	F20-BK
AC servo motor output (W)	600	600
Repeatability Note 2 (mm)	+/-0.01	+/-0.01
Drive system	Ball screw ϕ20	Ball screw ϕ20
Ball screw lead Note 3 (Deceleration ratio) (mm)	20	10
Maximum speed Note 4 (mm/sec)	1200	600
Moving range (mm)	250 to 1250	250 to 1050
Robot cable length (m)	Standard: 3.5 Option: 5,10	

Note 1. Use caution that the flame machining (installation holes, tap holes) differs from single-axis robots'.
Note 2. Positioning repeatability in one direction.
Note 3. Leads not listed in the catalog are also available. Contact us for details.
Note 4. When the X-axis/Y-axis stroke is longer than 850mm, resonance of the ball screw may occur depending on the operation conditions (critical speed). In this case, reduce the speed setting on the program by referring to the maximum speeds shown in the table below.

Maximum payload (kg)

Y stroke (mm)	XY 2 axes
250 to 1050	30

Controller

Controller	Operation method
RCX320-R	Programming / I/O point trace / Remote command / Operation using RS-232C communication

HXYx 2 axes P2

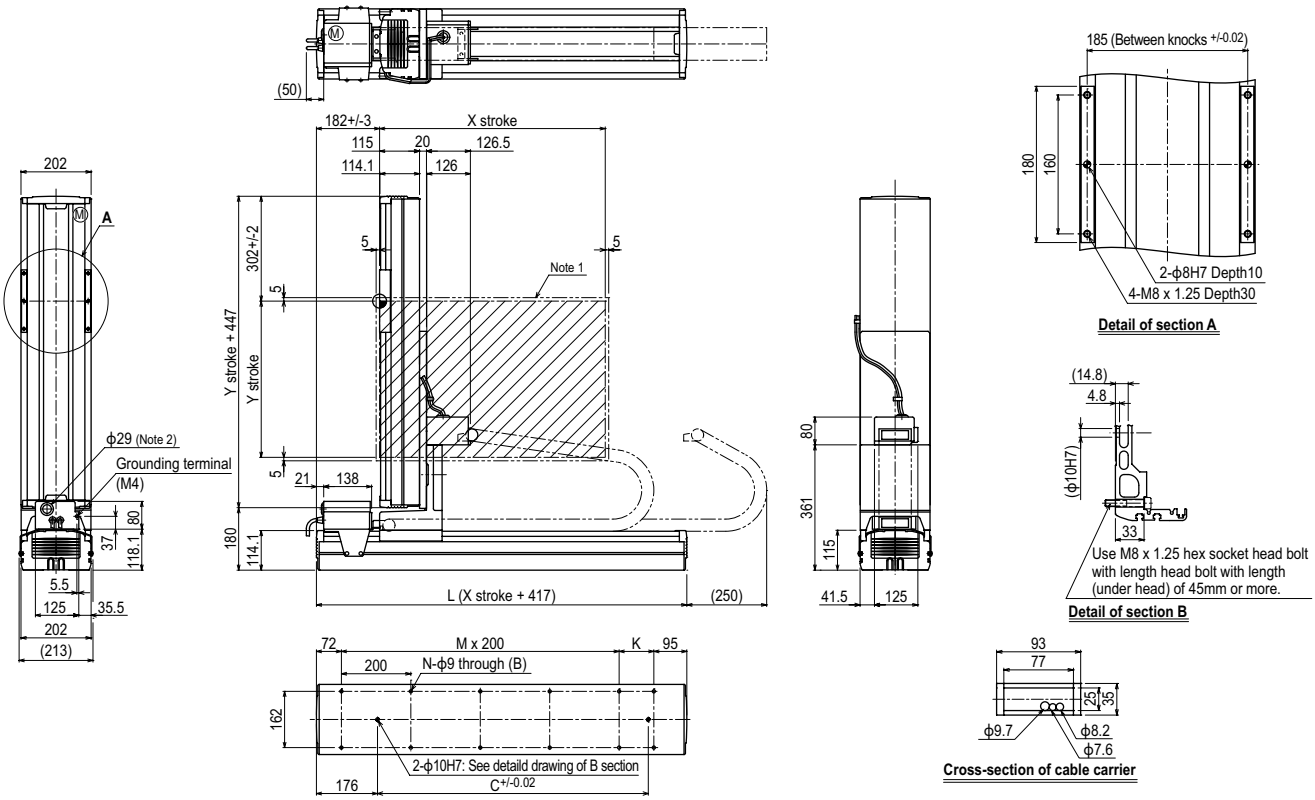

X stroke	250	350	450	550	650	750	850	950	1050	1150	1250
L	667	767	867	967	1067	1167	1267	1367	1467	1567	1667
K	100	200	100	200	100	200	100	200	100	200	100
C	420	420	600	600	780	708	960	960	1140	1320	1320
M	2	2	3	3	4	4	5	5	6	6	7
N	8	8	10	10	12	12	14	14	16	16	18

Y stroke	250	350	450	550	650	750	850	950	1050

Maximum speed for each stroke (mm/sec) Note 3								
	X-axis	1200	960	840	720	600	480
	Y-axis	600	480	420	360		
	Speed setting	–	80%	70%	60%	50%	40%

Note 1. The moving range when returning to origin and the stop position when stopping by the mechanical stopper.
Note 2. User cable extraction port.
Note 3. When the X-axis/Y-axis stroke is longer than 850mm, resonance of the ball screw may occur depending on the operation conditions (critical speed). In this case, reduce the speed setting on the program by referring to the maximum speeds shown in the table at the left.

HXYx 2 axes

Pole type Whipover

Ordering method

HXYx -	S -	P1 -	[ ] -	[ ] -	[ ] -	RCX320-2 -	[ ] -	R -	[ ] -	[ ] -	[ ] -	[ ]
Model	Cable	Combination	X-axis stroke Note 1	Y-axis stroke Note 1	Cable	Controller / Number of controllable axes	Safety standard	Regeneratine unit	Option A (OP.A)	Option B (OP.B)	Vision System	Absolute battery
			25 to 85cm	25 to 85cm	3L: 3.5m 5L: 5m 10L: 10m							

Specify various controller setting items. RCX320 ▶ P.626

Note 1. The total of the X and Y strokes should be 1100mm or less.

Specification

	X-axis	Y-axis
Axis construction Note 1	F20	F20-BK
AC servo motor output (W)	600	600
Repeatability Note 2 (mm)	+/-0.01	+/-0.01
Drive system	Ball screw ϕ20	Ball screw ϕ20
Ball screw lead Note 3 (Deceleration ratio) (mm)	20	10
Maximum speed Note 4 (mm/sec)	1200	600
Moving range (mm)	250 to 850	250 to 850
Robot cable length (m)	Standard: 3.5 Option: 5,10	

Note 1. Use caution that the flame machining (installation holes, tap holes) differs from single-axis robots'.
Note 2. Positioning repeatability in one direction.
Note 3. Leads not listed in the catalog are also available. Contact us for details.
Note 4. When the X-axis/Y-axis stroke is longer than 850mm, resonance of the ball screw may occur depending on the operation conditions (critical speed). In this case, reduce the speed setting on the program by referring to the maximum speeds shown in the table below.

Maximum payload (kg)

Y stroke (mm)	XY 2 axes
250 to 850	30

Controller

Controller	Operation method
RCX320-R	Programming / I/O point trace / Remote command / Operation using RS-232C communication

HXYx 2 axes P1

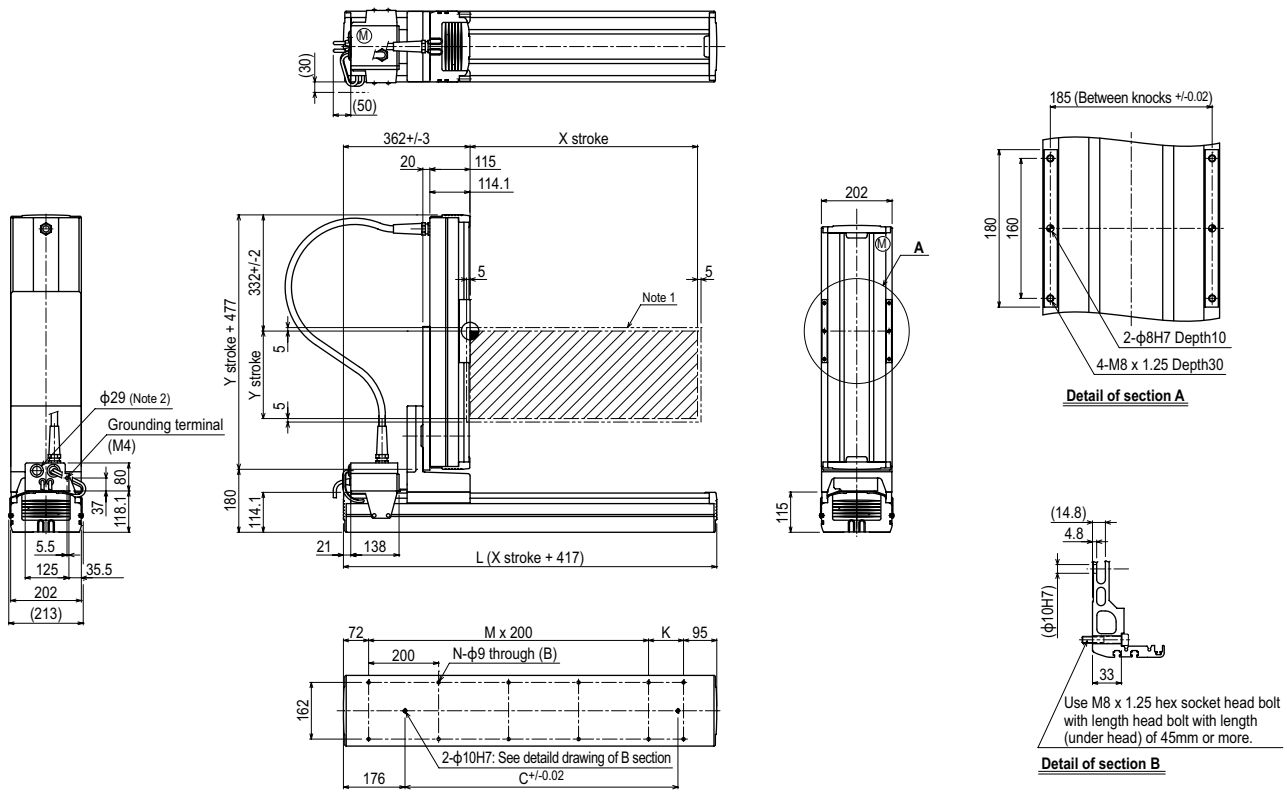

X stroke Note 3	250	350	450	550	650	750	850
L	667	767	867	967	1067	1167	1267
K	100	200	100	200	100	200	100
C	420	420	600	600	780	780	960
M	2	2	3	3	4	4	5
N	8	8	10	10	12	12	14

Y stroke Note 3	250	350	450	550	650	750	850
Maximum speed for each stroke (mm/sec) Note 4 — X-axis	1200						960
Y-axis	600						480
Speed setting	–						80%

Note 1. The moving range when returning to origin and the stop position when stopping by the mechanical stopper.
Note 2. User cable extraction port.

Note 3. The total of the X and Y strokes should be 1100mm or less.
Note 4. When the X-axis/Y-axis stroke is longer than 850mm, resonance of the ball screw may occur depending on the operation conditions (critical speed). In this case, reduce the speed setting on the program by referring to the maximum speeds shown in the table at the left.

HXYx 3 axes / ZPH

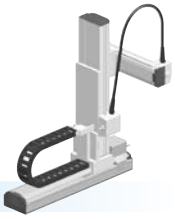

Pole type | Cable carrier | Z-axis: Clamped table / moving base type (200W) for Pole type

Ordering method

HXYx -	C -	P2 -	[ ] -	[ ] -	[ ] -	[ ] -	[ ] -	RCX340-3 -	[ ] -	[ ] -	[ ] -	[ ] -	[ ] -	[ ] -	[ ]
Model	Cable	Combi-nation	X-axis stroke Note 1	Y-axis stroke Note 1	ZR-axis	Z-axis stroke	Cable	Controller / Number of controllable axes	Safety standard	Option A (OP.A)	Option B (OP.B)	Option C (OP.C)	Option D (OP.D)	Option E (OP.E)	Absolute battery
			25 to 125cm	25 to 95cm	ZPHL ZPHR	25 to 65cm	3L: 3.5m 5L: 5m 10L: 10m								

Specify various controller setting items. RCX340 ▶ P636

Note 1. The total of the Y and Z strokes should be 1200mm or less.

Specification

	X-axis	Y-axis	Z-axis
Axis construction Note 1	F20	F20-BK	F14H
AC servo motor output (W)	600	600	200
Repeatability Note 2 (mm)	+/-0.01	+/-0.01	+/-0.01
Drive system	Ball screw ϕ20	Ball screw ϕ20	Ball screw ϕ15
Ball screw lead Note 3 (Deceleration ratio) (mm)	20	10	20
Maximum speed Note 4 (mm/sec)	1200	600	1200
Moving range (mm)	250 to 1250	250 to 950	250 to 650
Robot cable length (m)	Standard: 3.5 Option: 5,10		

Note 1. Use caution that the flame machining (installation holes, tap holes) differs from single-axis robots'.
Note 2. Positioning repeatability in one direction.
Note 3. Leads not listed in the catalog are also available. Contact us for details.
Note 4. When the X-axis/Y-axis stroke is longer than 850mm, resonance of the ball screw may occur depending on the operation conditions (critical speed). In this case, reduce the speed setting on the program by referring to the maximum speeds shown in the table below.

Maximum payload (kg)

	Z stroke (mm)
Y stroke (mm)	250 to 650
250 to 950	15

Controller

Controller	Operation method
RCX340	Programming / I/O point trace / Remote command / Operation using RS-232C communication

HXYx 3 axes / ZPHL P2

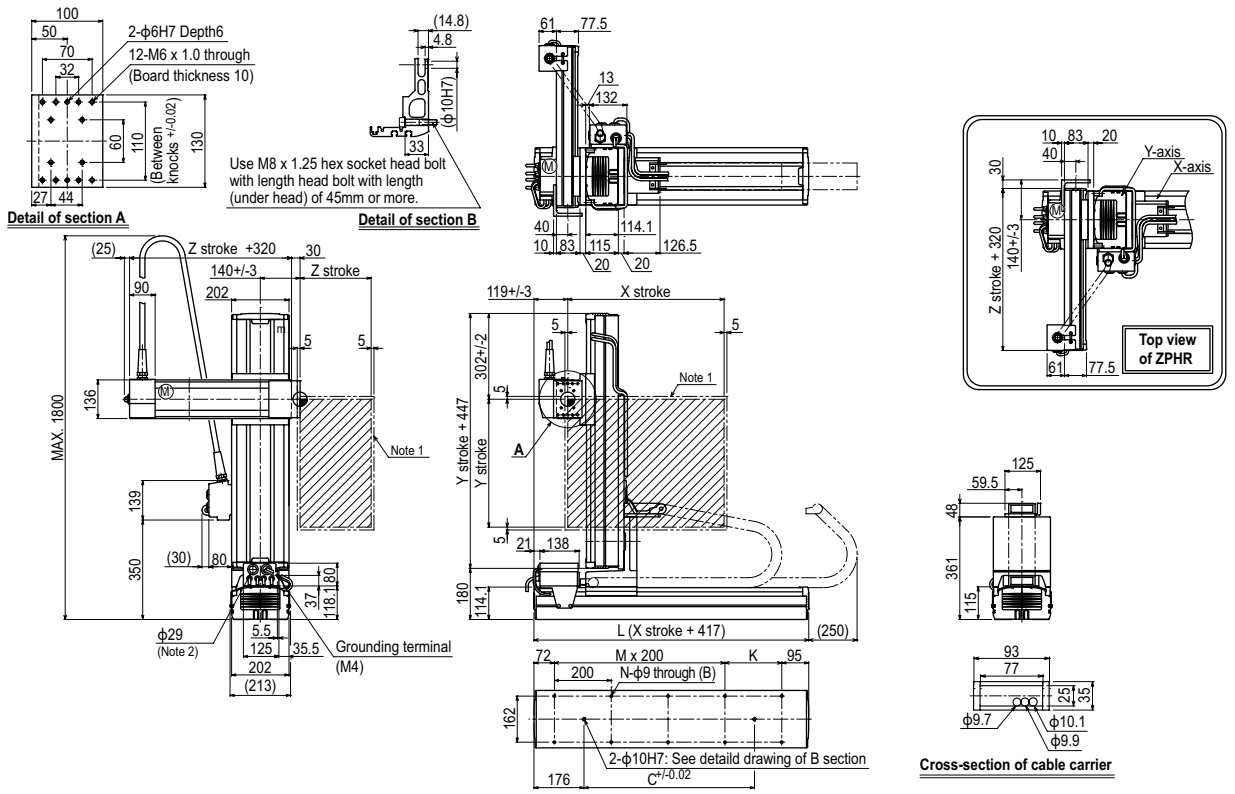

X stroke Note 4	250	350	450	550	650	750	850	950	1050	1150	1250
L	667	767	867	967	1067	1167	1267	1367	1467	1567	1667
K	100	200	100	200	100	200	100	200	100	200	100
C	420	420	600	600	780	780	960	960	1140	1320	1320
M	2	2	3	3	4	4	5	5	6	6	7
N	8	8	10	10	12	12	14	14	16	16	18

Y stroke Note 4	250	350	450	550	650	750	850	950

Z stroke	250	350	450	550	650

Maximum speed for each stroke (mm/sec) Note 5								
	X-axis	1200	960	840	720	600	480
	Y-axis	600	480	420			
	Speed setting	–	80%	70%	60%	50%	40%

Note 1. The moving range when returning to origin and the stop position when stopping by the mechanical stopper.
Note 2. User cable extraction port.
Note 3. This figure shows the combination for ZPHL. For the combination for ZPHR, see the top view in the figure.

Note 4. The total of the Y and Z strokes should be 1200mm or less.
Note 5. When the X-axis/Y-axis stroke is longer than 850mm, resonance of the ball screw may occur depending on the operation conditions (critical speed). In this case, reduce the speed setting on the program by referring to the maximum speeds shown in the table at the left.

HXYx 3 axes / ZPH

Pole type | Whipover

Z-axis: Clamped table / moving base type (200W) for Pole type

Ordering method

HXYx - S - P1 - [ ] - [ ] - [ ] - [ ] - [ ] - RCX340-3 - [ ] - [ ] - [ ] - [ ] - [ ] - [ ] - [ ]

Model	Cable	Combi-nation	X-axis stroke Note 1	Y-axis stroke Note 1	ZR-axis	Z-axis stroke	Cable	Controller / Number of controllable axes	Safety standard	Option A (OP.A)	Option B (OP.B)	Option C (OP.C)	Option D (OP.D)	Option E (OP.E)	Absolute battery
			25 to 85cm	25 to 85cm	ZPHL ZPHR	25 to 65cm	3L: 3.5m 5L: 5m 10L: 10m								

Specify various controller setting items. RCX340 ▶ P636

Note 1. The total of the X and Y strokes should be 1100mm or less and that of the Y and Z strokes should be 1200mm or less.

Specification

	X-axis	Y-axis	Z-axis
Axis construction Note 1	F20	F20-BK	F14H
AC servo motor output (W)	600	600	200
Repeatability Note 2 (mm)	+/-0.01	+/-0.01	+/-0.01
Drive system	Ball screw ϕ20	Ball screw ϕ20	Ball screw ϕ15
Ball screw lead Note 3 (Deceleration ratio) (mm)	20	10	20
Maximum speed Note 4 (mm/sec)	1200	600	1200
Moving range (mm)	250 to 850	250 to 850	250 to 650
Robot cable length (m)	Standard: 3.5 Option: 5,10		

Note 1. Use caution that the flame machining (installation holes, tap holes) differs from single-axis robots'.
Note 2. Positioning repeatability in one direction.
Note 3. Leads not listed in the catalog are also available. Contact us for details.
Note 4. When the X-axis/Y-axis stroke is longer than 850mm, resonance of the ball screw may occur depending on the operation conditions (critical speed). In this case, reduce the speed setting on the program by referring to the maximum speeds shown in the table below.

Maximum payload (kg)

	Z stroke (mm)
Y stroke (mm)	250 to 650
250 to 850	15

Controller

Controller	Operation method
RCX340	Programming / I/O point trace / Remote command / Operation using RS-232C communication

HXYx 3 axes / ZPHL P1

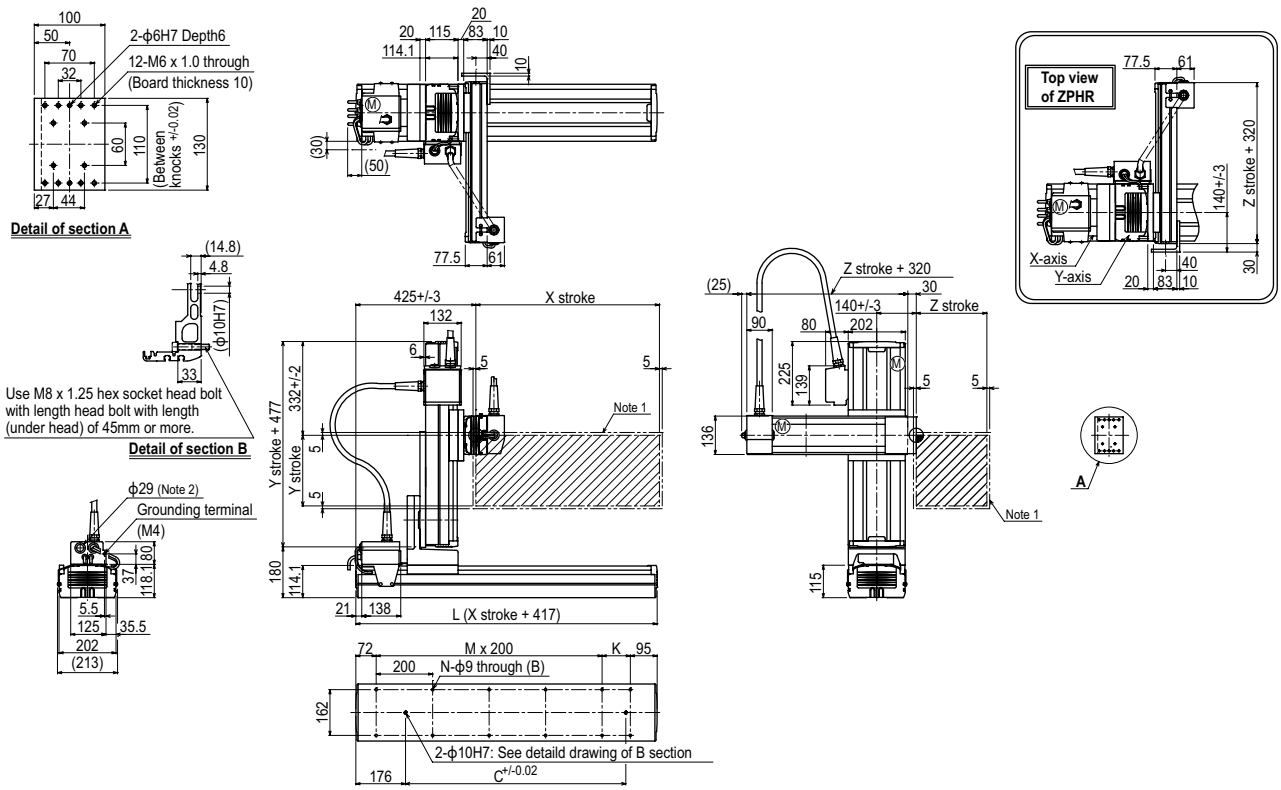

X stroke Note 4	250	350	450	550	650	750	850
L	667	767	867	967	1067	1167	1267
K	100	200	100	200	100	200	100
D	420	420	600	600	780	780	960
M	2	2	3	3	4	4	5
N	8	8	10	10	12	12	14

Y stroke Note 4	250	350	450	550	650	750	850
Z stroke	250	350	450	550	650		

Maximum speed for each stroke (mm/sec) Note 5			
	X-axis	1200	960
	Y-axis	600	480
	Speed setting	–	80%

Note 1. The moving range when returning to origin and the stop position when stopping by the mechanical stopper.
Note 2. User cable extraction port.
Note 3. This figure shows the combination for ZPHL. For the combination for ZPHR, see the top view in the figure.

Note 4. The total of the X and Y strokes should be 1100mm or less and that of the Y and Z strokes should be 1200mm or less.
Note 5. When the X-axis/Y-axis stroke is longer than 850mm, resonance of the ball screw may occur depending on the operation conditions (critical speed). In this case, reduce the speed setting on the program by referring to the maximum speeds shown in the table at the left.

SXYx 2 axes / ZF

XZ type | Cable carrier | Z-axis: clamped base / moving table type (100W)

Ordering method

SXYx -	C -	[ ] -	[ ] -	ZF -	[ ] -	[ ] -	RCX320-2 -	[ ] -	[ ] -	[ ] -	[ ] -	[ ]
Model	Cable	Combination	X-axis stroke	ZR-axis	Z-axis stroke	Cable	Controller / Number of controllable axes	Safety standard	Option A (OP.A)	Option B (OP.B)	Vision System	Absolute battery
		F1 F3	15 to 105cm		15 to 35cm	3L: 3.5m 5L: 5m 10L: 10m						

Specify various controller setting items. RCX320 ▶ P.626

Specification

	X-axis	Z-axis
Axis construction Note 1	F14	F10-BK
AC servo motor output (W)	100	100
Repeatability Note 2 (mm)	+/-0.01	+/-0.01
Drive system	Ball screw ϕ15	Ball screw ϕ15
Ball screw lead Note 3 (Deceleration ratio) (mm)	20	10
Maximum speed Note 4 (mm/sec)	1200	600
Moving range (mm)	150 to 1050	150 to 350
Robot cable length (m)	Standard: 3.5 Option: 5,10	

Note 1. Use caution that the flame machining (installation holes, tap holes) differs from single-axis robots'.
Note 2. Positioning repeatability in one direction.
Note 3. Leads not listed in the catalog are also available. Contact us for details.
Note 4. When the X-axis stroke is longer than 750mm, resonance of the ball screw may occur depending on the operation conditions (critical speed). In this case, reduce the speed setting on the program by referring to the maximum speeds shown in the table below.

Maximum payload (kg)

	Z stroke (mm)
X stroke (mm)	150 to 350
150 to 1050	10

Controller

Controller	Operation method
RCX320	Programming / I/O point trace / Remote command / Operation using RS-232C communication

SXYx 2 axes / ZF F1

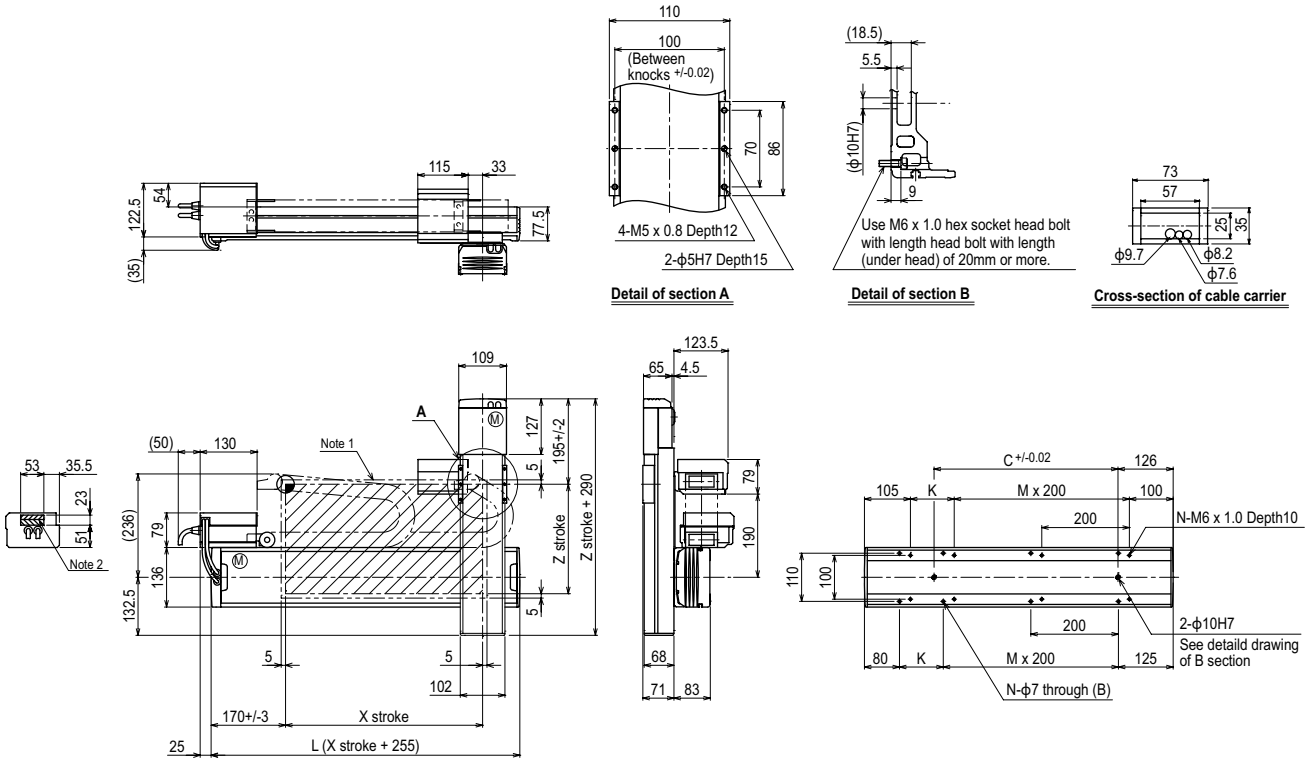

X stroke	150	250	350	450	550	650	750	850	950	1050
L	405	505	605	705	805	905	1005	1105	1205	1305
K	200	100	200	100	200	100	200	100	200	100
C	240	240	420	420	600	600	780	780	960	960
M	0	1	1	2	2	3	3	4	4	5
N	4	6	6	8	8	10	10	12	12	14

Z stroke		150	250	350						
Maximum speed for each stroke (mm/sec) Note 3	X-axis	1200			960	780	600	540		
	Speed setting	–			80%	65%	50%	45%		

Note 1. The moving range when returning to origin and the stop position when stopping by the mechanical stopper.
Note 2. The shaded position indicates an user cable extraction port.

Note 3. When the X-axis stroke is longer than 750mm, resonance of the ball screw may occur depending on the operation conditions (critical speed). In this case, reduce the speed setting on the program by referring to the maximum speeds shown in the table at the left.

SXYx 2 axes / ZF

XZ type | Whipover | Z-axis: clamped base / moving table type (100W)

Ordering method

SXYx -	S	-		-		- ZF -		-		- RCX320-2 -		-		-		-	
Model	Cable	Combination	X-axis stroke	ZR-axis	Z-axis stroke	Cable	Controller / Number of controllable axes	Safety standard	Option A (OP.A)	Option B (OP.B)	Vision System	Absolute battery
		F1 F3	15 to 85cm		15 to 35cm	3L: 3.5m 5L: 5m 10L: 10m						

Specify various controller setting items. RCX320 ▶ P626

Specification

	X-axis	Z-axis
Axis construction Note 1	F14	F10-BK
AC servo motor output (W)	100	100
Repeatability Note 2 (mm)	+/-0.01	+/-0.01
Drive system	Ball screw ϕ15	Ball screw ϕ15
Ball screw lead Note 3 (Deceleration ratio) (mm)	20	10
Maximum speed Note 4 (mm/sec)	1200	600
Moving range (mm)	150 to 850	150 to 350
Robot cable length (m)	Standard: 3.5 Option: 5,10	

Note 1. Use caution that the flame machining (installation holes, tap holes) differs from single-axis robots'.
Note 2. Positioning repeatability in one direction.
Note 3. Leads not listed in the catalog are also available. Contact us for details.
Note 4. When the X-axis stroke is longer than 750mm, resonance of the ball screw may occur depending on the operation conditions (critical speed). In this case, reduce the speed setting on the program by referring to the maximum speeds shown in the table below.

Maximum payload (kg)

	Z stroke (mm)
X stroke (mm)	150 to 350
150 to 850	10

Controller

Controller	Operation method
RCX320	Programming / I/O point trace / Remote command / Operation using RS-232C communication

SXYx 2 axes / ZF F1

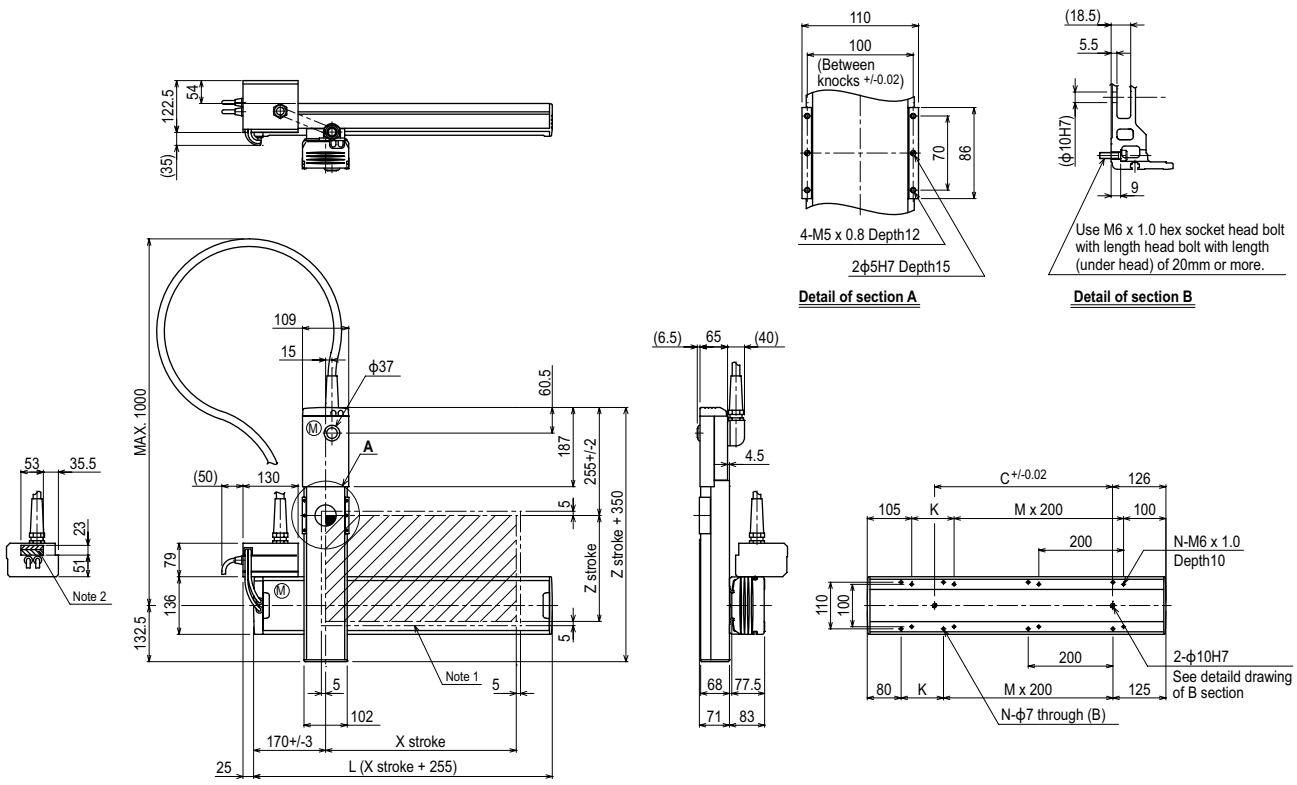

X stroke	150	250	350	450	550	650	750	850
L	405	505	605	705	805	905	1005	1105
K	200	100	200	100	200	100	200	100
C	240	240	420	420	600	600	780	780
M	0	1	1	2	2	3	3	4
N	4	6	6	8	8	10	10	12

Z stroke	150	250	350
Maximum speed for each stroke (mm/sec) Note 3 — X-axis	1200	960	780
Maximum speed for each stroke (mm/sec) Note 3 — Speed setting	–	80%	65%

Note 1. The moving range when returning to origin and the stop position when stopping by the mechanical stopper.
Note 2. The shaded position indicates an user cable extraction port.
Note 3. When the X-axis stroke is longer than 750mm, resonance of the ball screw may occur depending on the operation conditions (critical speed). In this case, reduce the speed setting on the program by referring to the maximum speeds shown in the table at the left.

Controller RCX320 ▶ 626

SXYx 2 axes / ZFL20

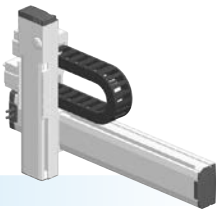

XZ type | Cable carrier | Z-axis: clamped base / moving table type (200W)

Ordering method

SXYx -	C -	[ ] -	[ ] -	ZFL20 -	[ ] -	[ ] -	RCX320-2 -	[ ] -	R -	[ ] -	[ ] -	[ ] -	[ ]
Model	Cable	Combination	X-axis stroke	ZR-axis	Z-axis stroke	Cable	Controller / Number of controllable axes	Safety standard	Regeneratine unit Note 1	Option A (OP.A)	Option B (OP.B)	Vision System	Absolute battery
		F1 F3	15 to 105cm		15 to 35cm	3L: 3.5m 5L: 5m 10L: 10m							

Specify various controller setting items. RCX320 ▶ P.626

Note 1. RCX320 uses the YHX-RU regenerative unit. The RCX222 uses the RG2.

Specification

	X-axis	Z-axis
Axis construction Note 1	F14	F10H-BK
AC servo motor output (W)	100	200
Repeatability Note 2 (mm)	+/-0.01	+/-0.01
Drive system	Ball screw ϕ15	Ball screw ϕ15
Ball screw lead Note 3 (Deceleration ratio) (mm)	20	20
Maximum speed Note 4 (mm/sec)	1200	1200
Moving range (mm)	150 to 1050	150 to 350
Robot cable length (m)	Standard: 3.5 Option: 5,10	

Note 1. Use caution that the flame machining (installation holes, tap holes) differs from single-axis robots'.
Note 2. Positioning repeatability in one direction.
Note 3. Leads not listed in the catalog are also available. Contact us for details.
Note 4. When the X-axis stroke is longer than 750mm, resonance of the ball screw may occur depending on the operation conditions (critical speed). In this case, reduce the speed setting on the program by referring to the maximum speeds shown in the table below.

Maximum payload (kg)

	Z stroke (mm)
X stroke (mm)	150 to 350
150 to 1050	8

Controller

Controller	Operation method
RCX320-R	Programming / I/O point trace / Remote command / Operation using RS-232C communication

SXYx 2 axes / ZFL20 F1

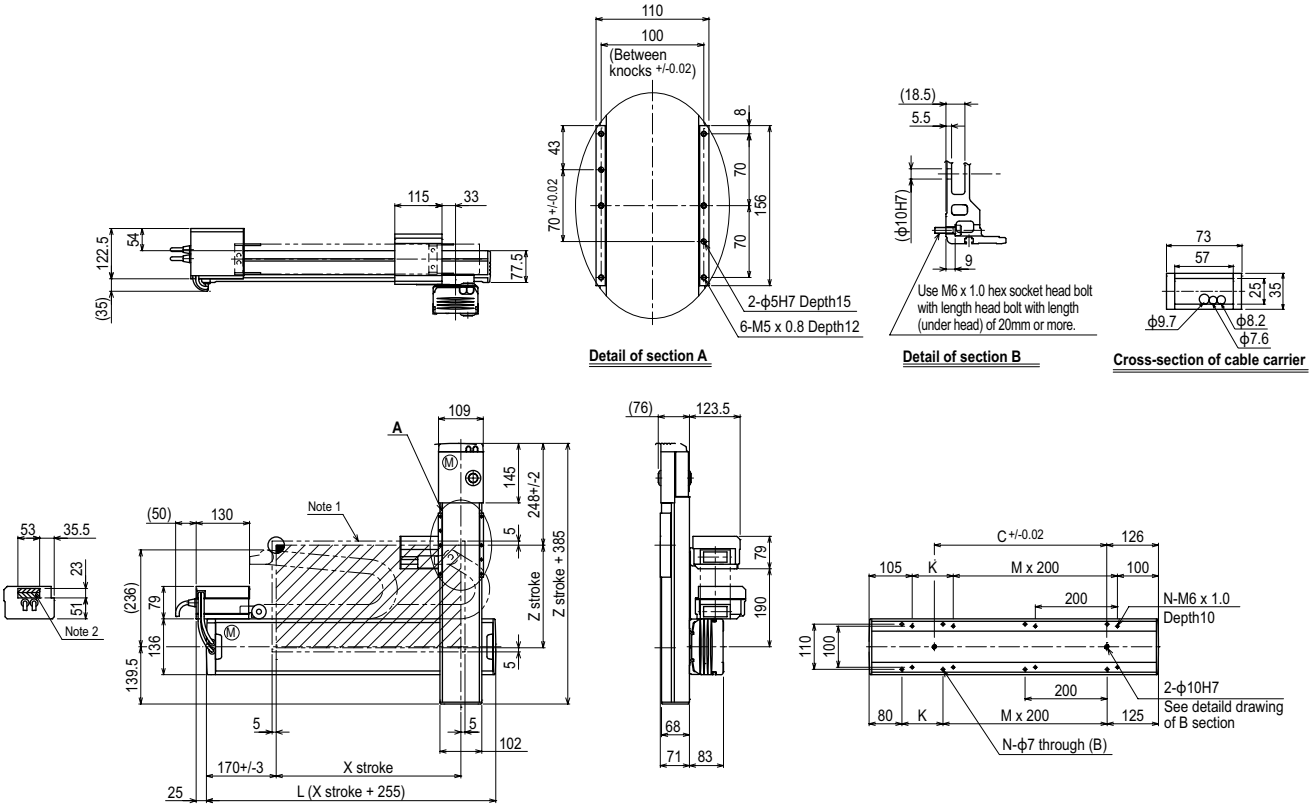

X stroke	150	250	350	450	550	650	750	850	950	1050
L	405	505	605	705	805	905	1005	1105	1205	1305
K	200	100	200	100	200	100	200	100	200	100
C	240	240	420	420	600	600	780	780	960	960
M	0	1	1	2	2	3	3	4	4	5
N	4	6	6	8	8	10	10	12	12	14

Z stroke	150	250	350
Maximum speed for each stroke (mm/sec) Note 3 — X-axis	1200		
Maximum speed for each stroke (mm/sec) Note 3 — Speed setting	–		

960	780	600	540
80%	65%	50%	45%

Note 1. The moving range when returning to origin and the stop position when stopping by the mechanical stopper.
Note 2. The shaded position indicates an user cable extraction port.

Note 3. When the X-axis stroke is longer than 750mm, resonance of the ball screw may occur depending on the operation conditions (critical speed). In this case, reduce the speed setting on the program by referring to the maximum speeds shown in the table at the left.

SXYx 2 axes / ZS

XZ type | Cable carrier | Z-axis shaft vertical type

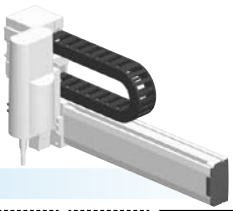

Ordering method

SXYx - C	-		-		-	15	-		-	RCX320-2	-		-		-		-	
Model	Cable	Combination	X-axis stroke	ZR-axis	Z-axis stroke	Cable	Controller / Number of controllable axes	Safety standard	Option A (OP.A)	Option B (OP.B)	Vision System	Absolute battery
		F1 F3	15 to 105cm	ZS12 ZS6		3L: 3.5m 5L: 5m 10L: 10m						

Specify various controller setting items. RCX320 ▶ P.626

Specification

	X-axis	Z-axis: ZS12	Z-axis: ZS6
Axis construction Note 1	F14	–	
AC servo motor output (W)	100	60	
Repeatability Note 2 (mm)	+/-0.01	+/-0.02	
Drive system	Ball screw ϕ15	Ball screw ϕ12	
Ball screw lead Note 3 (Deceleration ratio) (mm)	20	12	6
Maximum speed Note 4 (mm/sec)	1200	1000	500
Moving range (mm)	150 to 1050	150	
Robot cable length (m)	Standard: 3.5 Option: 5,10		

Note 1. Use caution that the flame machining (installation holes, tap holes) differs from single-axis robots'.
Note 2. Positioning repeatability in one direction.
Note 3. Leads not listed in the catalog are also available. Contact us for details.
Note 4. When the X-axis stroke is longer than 750mm, resonance of the ball screw may occur depending on the operation conditions (critical speed). In this case, reduce the speed setting on the program by referring to the maximum speeds shown in the table below.

Maximum payload (kg)

Y stroke (mm)	ZS12	ZS6
150 to 1050	3	5

Controller

Controller	Operation method
RCX320	Programming / I/O point trace / Remote command / Operation using RS-232C communication

SXYx 2 axes / ZS F1

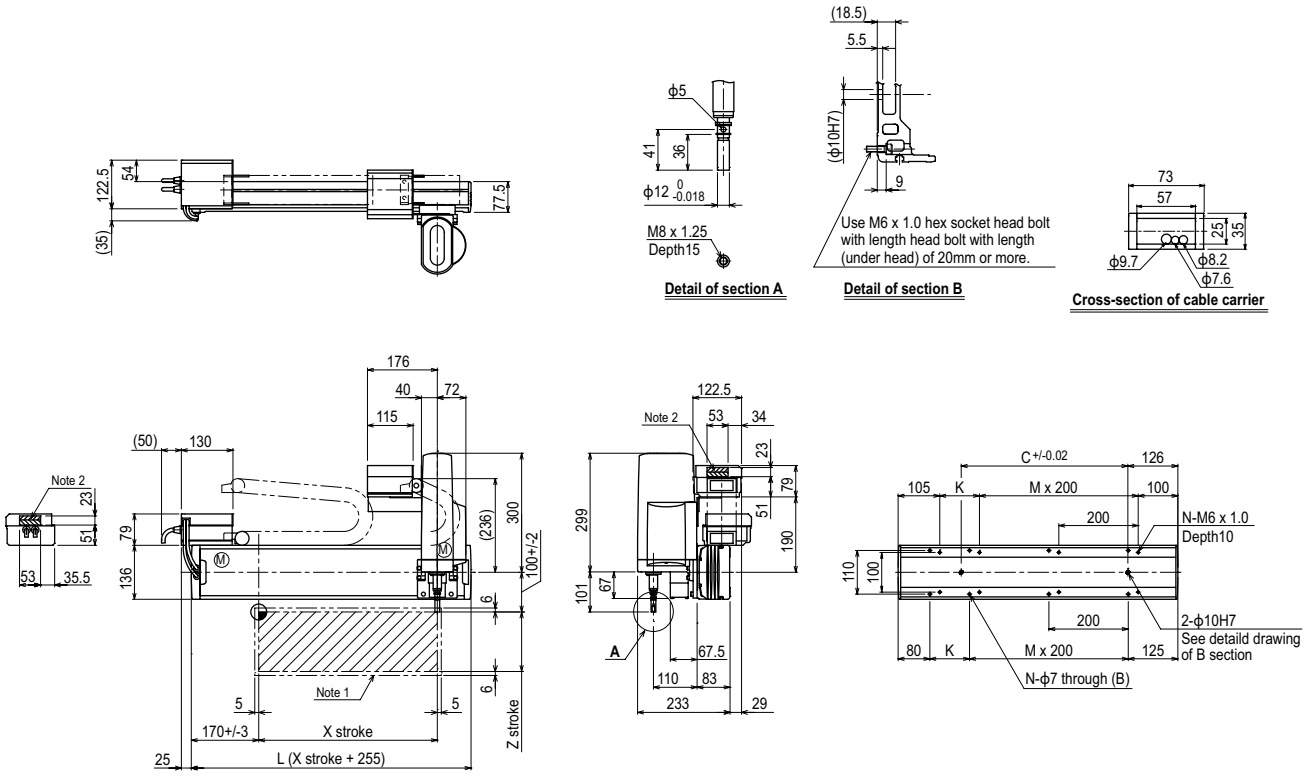

X stroke	150	250	350	450	550	650	750	850	950	1050
L	405	505	605	705	805	905	1005	1105	1205	1305
K	200	100	200	100	200	100	200	100	200	100
C	240	240	420	420	600	600	780	780	960	960
M	0	1	1	2	2	3	3	4	4	5
N	4	6	6	8	8	10	10	12	12	14

Z stroke	150

Maximum speed for each stroke (mm/sec) Note 3						
X-axis	1200	960	780	600	540
Speed setting	–	80%	65%	50%	45%

Note 1. The moving range when returning to origin and the stop position when stopping by the mechanical stopper.
Note 2. The shaded position indicates an user cable extraction port.

Note 3. When the X-axis stroke is longer than 750mm, resonance of the ball screw may occur depending on the operation conditions (critical speed). In this case, reduce the speed setting on the program by referring to the maximum speeds shown in the table at the left.

SXYBx 2 axes / ZF

XZ type | Cable carrier | Z-axis: clamped base / moving table type (100W)

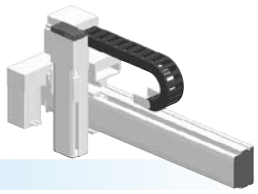

Ordering method

SXYBx -	C -	[ ] -	[ ] -	ZF -	[ ] -	[ ] -	RCX320-2 -	[ ] -	[ ] -	[ ] -	[ ] -	[ ] -	[ ]
Model	Cable	Combination	X-axis stroke	ZR-axis	Z-axis stroke	Cable	Controller / Number of controllable axes	Safety standard	Regeneratine unit Note 1	Option A (OP.A)	Option B (OP.B)	Vision System	Absolute battery
		F1 F3	15 to 305cm		15 to 35cm	3L: 3.5m 5L: 5m 10L: 10m							

Specify various controller setting items. RCX320 ▶ P.626

Note 1. A regenerative unit is required when the maximum speed exceeds 1250mm/sec.

Specification

	X-axis	Z-axis
Axis construction Note 1	B14H	F10-BK
AC servo motor output (W)	200	100
Repeatability Note 2 (mm)	+/-0.04	+/-0.01
Drive system	Timing belt	Ball screw ϕ15
Ball screw lead Note 3 (Deceleration ratio) (mm)	Equivalent to lead 25	10
Maximum speed (mm/sec)	1875	600
Moving range (mm)	150 to 3050	150 to 350
Robot cable length (m)	Standard: 3.5 Option: 5,10	

Note 1. Use caution that the flame machining (installation holes, tap holes) differs from single-axis robots'.
Note 2. Positioning repeatability in one direction.
Note 3. Leads not listed in the catalog are also available. Contact us for details.

Maximum payload (kg)

	Z stroke (mm)
X stroke (mm)	150 to 350
150 to 3050	10

Controller

Controller	Operation method
RCX320	Programming / I/O point trace / Remote command / Operation using RS-232C communication

Note. A regenerative unit is required when the maximum speed exceeds 1250mm/sec.

SXYBx 2 axes / ZF F1

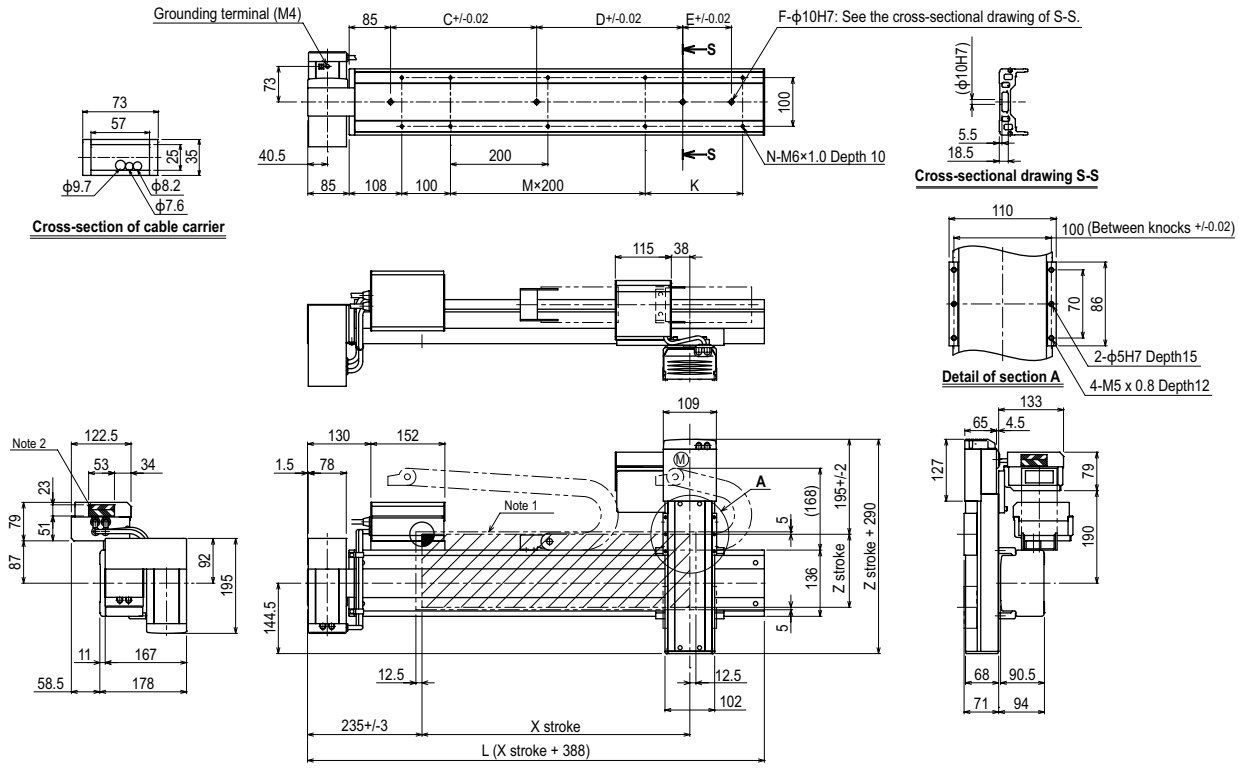

Note 1. The moving range when returning to origin and the stop position when stopping by the mechanical stopper.
Note 2. The shaded position indicates an user cable extraction port.
Note 3. LU specification should be used for installation of the X axis motor.

X stroke	150	250	350	450	550	650	750	850	950	1050	1150	1250	1350	1450	1550	1650	1750	1850	1950	2050	2150	2250	2350	2450	2550	2650	2750	2850	2950	3050
L	538	638	738	838	938	1038	1138	1238	1338	1438	1538	1638	1738	1838	1938	2038	2138	2238	2338	2438	2538	2638	2738	2838	2938	3038	3138	3238	3338	3438
K	-	100	200	100	200	100	200	100	200	100	200	100	200	100	200	100	200	100	200	100	200	100	200	100	200	100	200	100	200	100
C	240	420	420	600	600	780	780	960	1140	1140	1140	1140	1140	1140	1140	1140	1140	1140	1140	1140	1140	1140	1140	1140	1140	1140	1140	1140	1140	1140
D	-	-	-	-	-	-	-	-	-	-	-	240	240	420	600	600	780	780	960	960	1140	1140	1140	1140	1140	1140	1140	1140	1140	1140
E	-	-	-	-	-	-	-	-	-	-	-	-	-	-	-	-	-	-	-	-	-	-	240	240	420	420	600	600	780	960
F	2	2	2	2	2	2	2	2	2	2	2	3	3	3	3	3	3	3	3	3	3	3	4	4	4	4	4	4	4	4
M	1	1	1	2	2	3	3	4	4	5	5	6	6	7	7	8	8	9	9	10	10	11	11	12	12	13	13	14	14	15
N	6	8	8	10	10	12	12	14	14	16	16	18	18	20	20	22	22	24	24	26	26	28	28	30	30	32	32	34	34	36

Z stroke	150	250	350

Controller RCX320 ▶ 626

SXYBx 2 axes / ZFL20

XZ type | Cable carrier | Z-axis: clamped base / moving table type (200W)

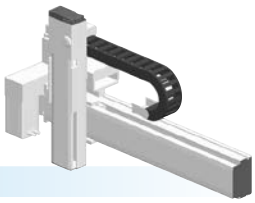

Ordering method

SXYBx - C -	[ ]	- [ ]	- ZFL20 -	[ ]	- [ ]	- RCX320-2 -	[ ]	- R -	[ ]	- [ ]	- [ ]	- [ ]
Model	Cable	Combination	X-axis stroke	ZR-axis	Z-axis stroke	Cable	Controller / Number of controllable axes	Safety standard	Regenerative unit	Option A (OP.A)	Option B (OP.B)	Vision System	Absolute battery
		F1 F3	15 to 305cm		15 to 35cm	3L: 3.5m 5L: 5m 10L: 10m							

Specify various controller setting items. RCX320 ▶ P626

Specification

	X-axis	Z-axis
Axis construction Note 1	B14H	F10H-BK
AC servo motor output (W)	200	200
Repeatability Note 2 (mm)	+/-0.04	+/-0.01
Drive system	Timing belt	Ball screw ϕ15
Ball screw lead Note 3 (Deceleration ratio) (mm)	Equivalent to lead 25	20
Maximum speed (mm/sec)	1875	1200
Moving range (mm)	150 to 3050	150 to 350
Robot cable length (m)	Standard: 3.5 Option: 5,10	

Note 1. Use caution that the flame machining (installation holes, tap holes) differs from single-axis robots'.
Note 2. Positioning repeatability in one direction.
Note 3. Leads not listed in the catalog are also available. Contact us for details.

Maximum payload (kg)

	Z stroke (mm)
X stroke (mm)	150 to 350
150 to 3050	8

Controller

Controller	Operation method
RCX320-R	Programming / I/O point trace / Remote command / Operation using RS-232C communication

SXYBx 2 axes / ZFL20 F1

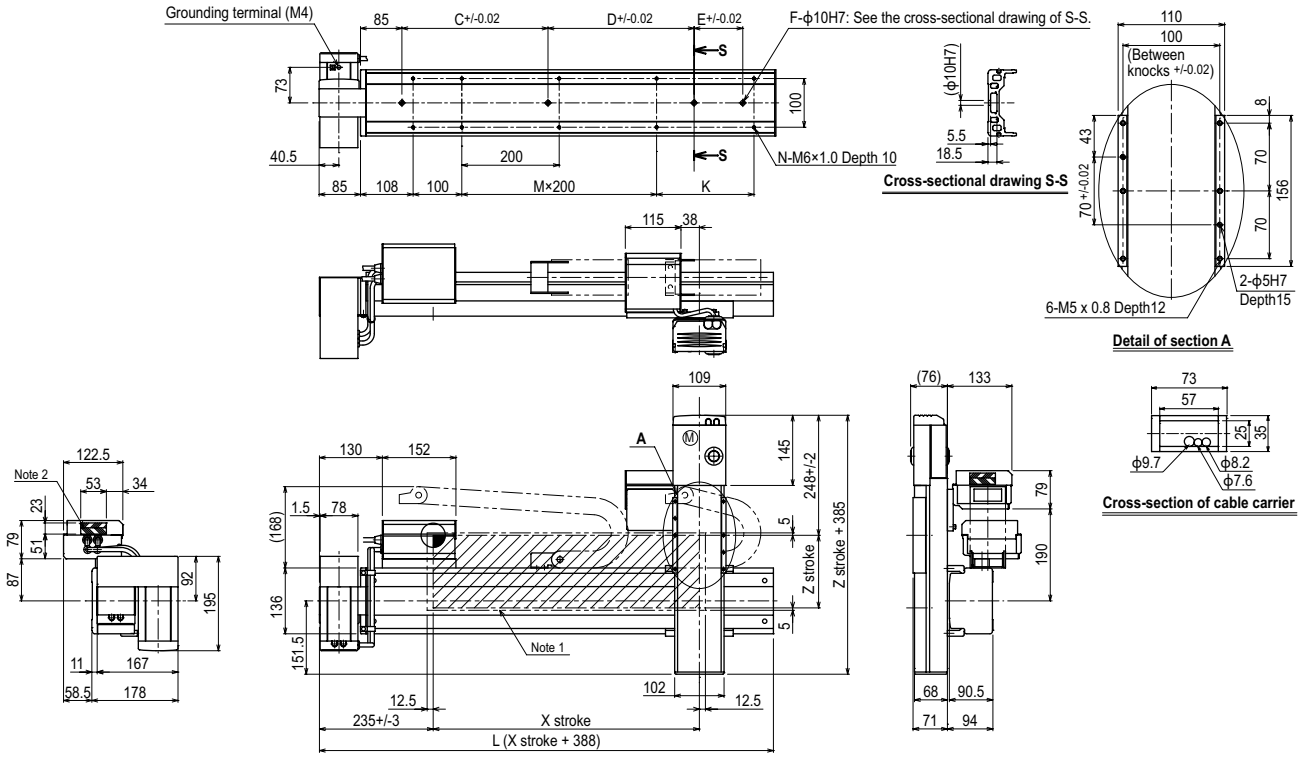

Note 1. The moving range when returning to origin and the stop position when stopping by the mechanical stopper.
Note 2. The shaded position indicates an user cable extraction port.
Note 3. LU specification should be used for installation of the X axis motor.

X stroke	150	250	350	450	550	650	750	850	950	1050	1150	1250	1350	1450	1550	1650	1750	1850	1950	2050	2150	2250	2350	2450	2550	2650	2750	2850	2950	3050
L	538	638	738	838	938	1038	1138	1238	1338	1438	1538	1638	1738	1838	1938	2038	2138	2238	2338	2438	2538	2638	2738	2838	2938	3038	3138	3238	3338	3438
K	-	100	200	100	200	100	200	100	200	100	200	100	200	100	200	100	200	100	200	100	200	100	200	100	200	100	200	100	200	100
C	240	420	420	600	600	780	780	960	1140	1140	1140	1140	1140	1140	1140	1140	1140	1140	1140	1140	1140	1140	1140	1140	1140	1140	1140	1140	1140	1140
D	-	-	-	-	-	-	-	-	-	-	-	240	240	420	600	600	780	780	960	960	1140	1140	1140	1140	1140	1140	1140	1140	1140	1140
E	-	-	-	-	-	-	-	-	-	-	-	-	-	-	-	-	-	-	-	-	-	-	240	240	420	420	600	600	780	960
F	2	2	2	2	2	2	2	2	2	2	2	3	3	3	3	3	3	3	3	3	3	3	4	4	4	4	4	4	4	4
M	1	1	1	2	2	3	3	4	4	5	5	6	6	7	7	8	8	9	9	10	10	11	11	12	12	13	13	14	14	15
N	6	8	8	10	10	12	12	14	14	16	16	18	18	20	20	22	22	24	24	26	26	28	28	30	30	32	32	34	34	36

Z stroke	150	250	350

Controller RCX320 ▶ 626

MXYx 2 axes / ZFL10

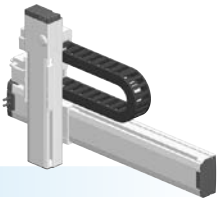

XZ type | Cable carrier | Z-axis: clamped base / moving table type (200W)

Ordering method

MXYx -	C	-		-		- ZFL10 -			-	RCX320-2	-		R	-		-		-	
Model	Cable	Combination	X-axis stroke	ZR-axis	Z-axis stroke	Cable	Controller / Number of controllable axes	Safety standard	Regeneratine unit	Option A (OP.A)	Option B (OP.B)	Vision System	Absolute battery
		F1 F3	15 to 105cm		15 to 35cm	3L: 3.5m 5L: 5m 10L: 10m							

Specify various controller setting items. RCX320 ▶ P626

Specification

	X-axis	Z-axis
Axis construction Note 1	F14H	F10H-BK
AC servo motor output (W)	200	200
Repeatability Note 2 (mm)	+/-0.01	+/-0.01
Drive system	Ball screw ϕ15	Ball screw ϕ15
Ball screw lead Note 3 (Deceleration ratio) (mm)	20	10
Maximum speed Note 4 (mm/sec)	1200	600
Moving range (mm)	150 to 1050	150 to 350
Robot cable length (m)	Standard: 3.5 Option: 5,10	

Note 1. Use caution that the flame machining (installation holes, tap holes) differs from single-axis robots'.
Note 2. Positioning repeatability in one direction.
Note 3. Leads not listed in the catalog are also available. Contact us for details.
Note 4. When the X-axis stroke is longer than 750mm, resonance of the ball screw may occur depending on the operation conditions (critical speed). In this case, reduce the speed setting on the program by referring to the maximum speeds shown in the table below.

Maximum payload (kg)

	Z stroke (mm)
X stroke (mm)	150 to 350
150 to 1050	15

Controller

Controller	Operation method
RCX320-R	Programming / I/O point trace / Remote command / Operation using RS-232C communication

MXYx 2 axes / ZFL10 F1

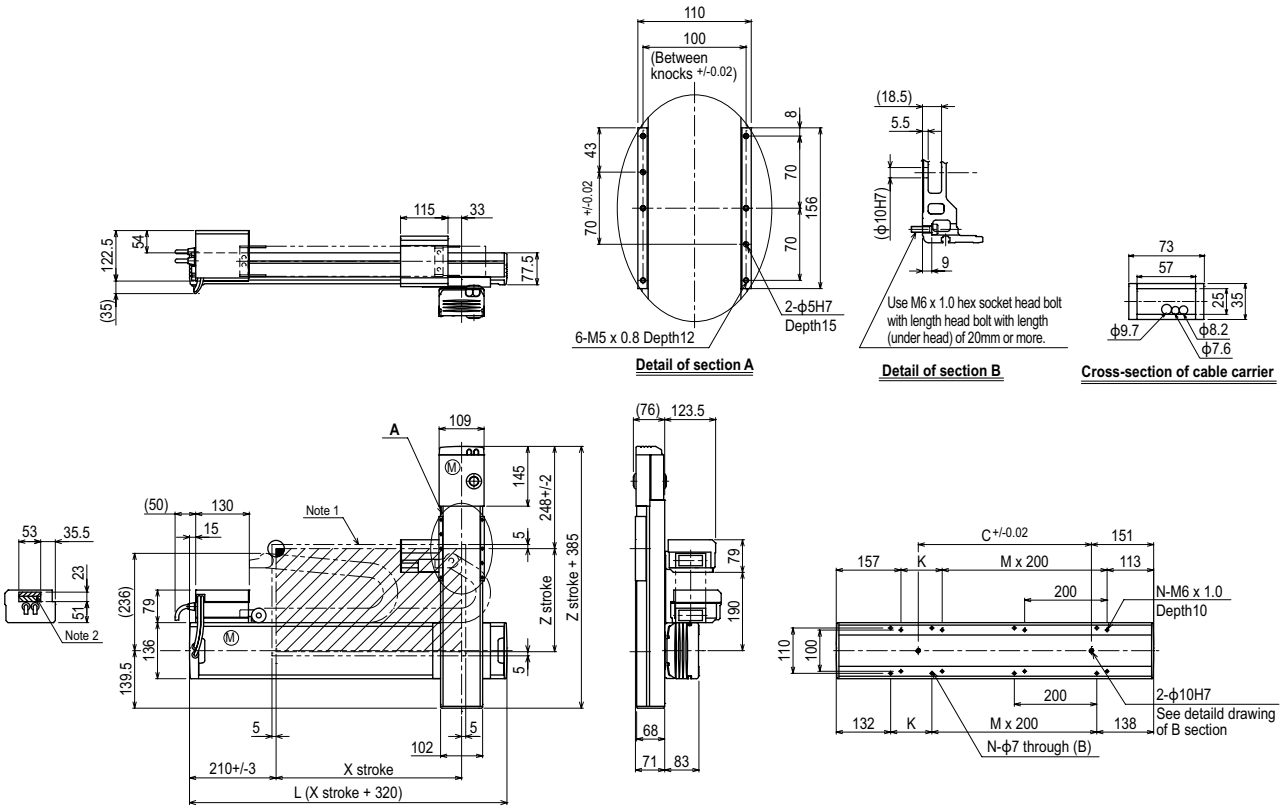

X stroke	150	250	350	450	550	650	750	850	950	1050
L	470	570	670	770	870	970	1070	1170	1270	1370
K	200	100	200	100	200	100	200	100	200	100
C	240	240	420	420	600	600	780	960	960	1140
M	0	1	1	2	2	3	3	4	4	5
N	4	6	6	8	8	10	10	12	12	14

Z stroke	150	250	350
Maximum speed for each stroke (mm/sec) Note 3 — X-axis	1200	960	780	600	540
Maximum speed for each stroke (mm/sec) Note 3 — Speed setting	–	80%	65%	50%	45%

Note 1. The moving range when returning to origin and the stop position when stopping by the mechanical stopper.
Note 2. The shaded position indicates an user cable extraction port.

Note 3. When the X-axis stroke is longer than 750mm, resonance of the ball screw may occur depending on the operation conditions (critical speed). In this case, reduce the speed setting on the program by referring to the maximum speeds shown in the table at the left.

Controller RCX320 ▶ 626

MXYx 2 axes / ZFH

XZ type | Cable carrier | Z-axis: clamped table / moving base type (200W)

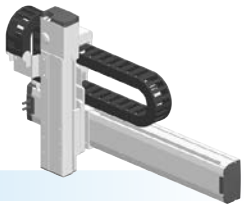

Ordering method

MXYx - C	-		-		- ZFH -			- RCX320-2	-		-		-		-
Model	Cable	Combination	X-axis stroke	ZR-axis	Z-axis stroke	Cable		Controller / Number of controllable axes	Safety standard	Regenerating unit	Option A (OP.A)	Option B (OP.B)	Vision System	Absolute battery	
		F1 F3	15 to 105cm		15 to 35cm	3L: 3.5m 5L: 5m 10L: 10m				R					

Specify various controller setting items. RCX320 ▶ P.626

Specification

	X-axis	Z-axis
Axis construction Note 1	F14H	F10H-BK
AC servo motor output (W)	200	200
Repeatability Note 2 (mm)	+/-0.01	+/-0.01
Drive system	Ball screw ϕ15	Ball screw ϕ15
Ball screw lead Note 3 (Deceleration ratio) (mm)	20	10
Maximum speed Note 4 (mm/sec)	1200	600
Moving range (mm)	150 to 1050	150 to 350
Robot cable length (m)	Standard: 3.5 Option: 5,10	

Note 1. Use caution that the flame machining (installation holes, tap holes) differs from single-axis robots'.
Note 2. Positioning repeatability in one direction.
Note 3. Leads not listed in the catalog are also available. Contact us for details.
Note 4. When the X-axis stroke is longer than 750mm, resonance of the ball screw may occur depending on the operation conditions (critical speed). In this case, reduce the speed setting on the program by referring to the maximum speeds shown in the table below.

Maximum payload (kg)

	Z stroke (mm)		
X stroke (mm)	150	250	350
150 to 1050	14	13	12

Controller

Controller	Operation method
RCX320-R	Programming / I/O point trace / Remote command / Operation using RS-232C communication

MXYx 2 axes / ZFH F1

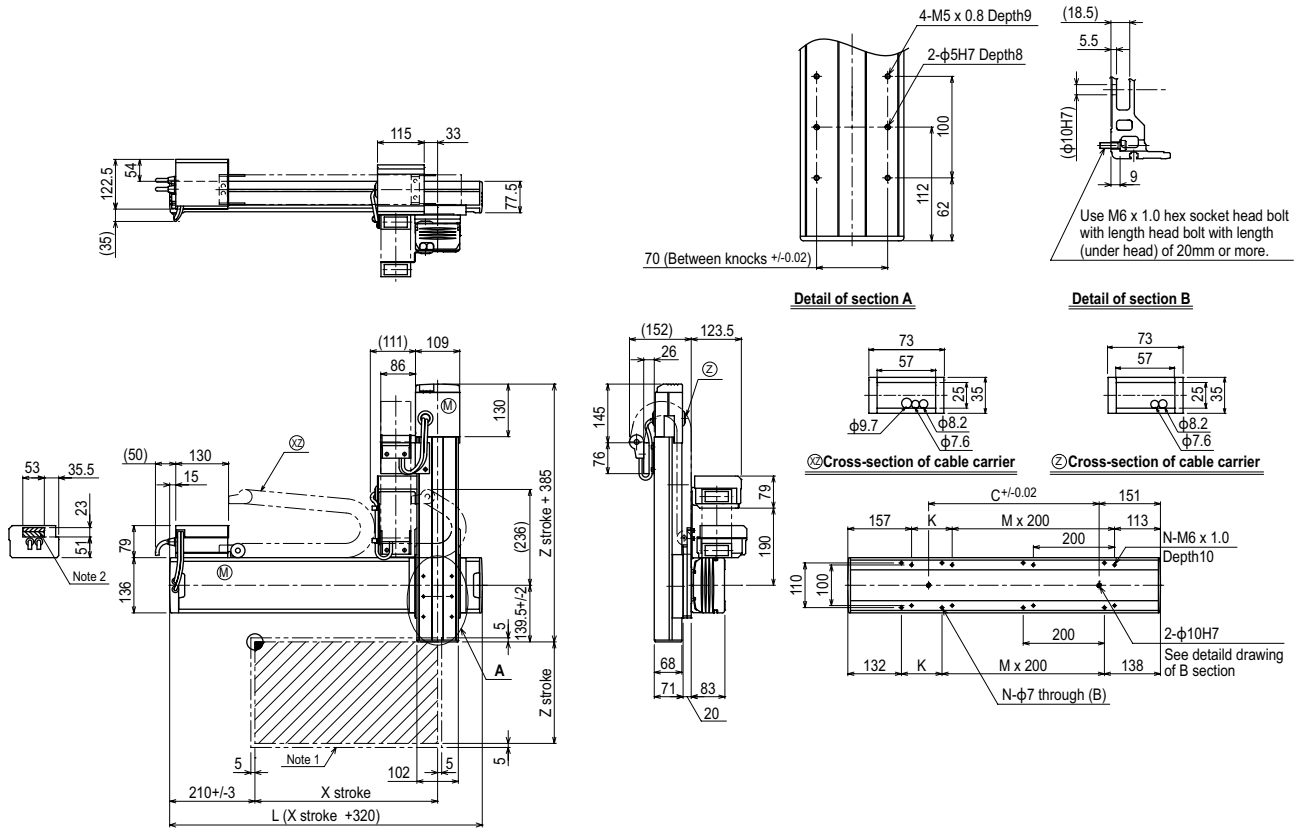

X stroke	150	250	350	450	550	650	750	850	950	1050
L	470	570	670	770	870	970	1070	1170	1270	1370
K	200	100	200	100	200	100	200	100	200	100
C	240	240	420	420	600	600	780	960	960	1140
M	0	1	1	2	2	3	3	4	4	5
N	4	6	6	8	8	10	10	12	12	14

Z stroke	150	250	350

Maximum speed for each stroke (mm/sec) Note 3								
	X-axis	1200			960	780	600	540
	Speed setting	–			80%	65%	50%	45%

Note 1. The moving range when returning to origin and the stop position when stopping by the mechanical stopper.
Note 2. The shaded position indicates an user cable extraction port.
Note 3. When the X-axis stroke is longer than 750mm, resonance of the ball screw may occur depending on the operation conditions (critical speed). In this case, reduce the speed setting on the program by referring to the maximum speeds shown in the table at the left.

HXYx 2 axes / ZL

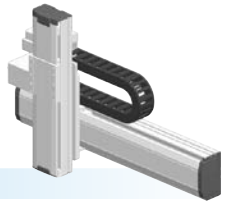

XZ type | Cable carrier | Z-axis: clamped base / moving table type (200W)

Ordering method

HXYx -	C	-		-		-	ZL	-		-		-	RCX320-2	-		-		-		-		-		-	
Model	Cable	Combination (F1, F3)	X-axis stroke (25 to 125cm)	ZR-axis	Z-axis stroke (25 to 55cm)	Cable (3L: 3.5m, 5L: 5m, 10L: 10m)	Controller / Number of controllable axes	Safety standard	Regeneratine unit	Option A (OP.A)	Option B (OP.B)	Vision System	Absolute battery

Specify various controller setting items. RCX320 ▶ P.626

Specification

	X-axis	Z-axis
Axis construction Note 1	F17	F14H-BK
AC servo motor output (W)	400	200
Repeatability Note 2 (mm)	+/-0.01	+/-0.01
Drive system	Ball screw ϕ20	Ball screw ϕ15
Ball screw lead Note 3 (Deceleration ratio) (mm)	20	10
Maximum speed Note 4 (mm/sec)	1200	600
Moving range (mm)	250 to 1250	250 to 550
Robot cable length (m)	Standard: 3.5 Option: 5,10	

Note 1. Use caution that the flame machining (installation holes, tap holes) differs from single-axis robots'.
Note 2. Positioning repeatability in one direction.
Note 3. Leads not listed in the catalog are also available. Contact us for details.
Note 4. When the X-axis stroke is longer than 850mm, resonance of the ball screw may occur depending on the operation conditions (critical speed). In this case, reduce the speed setting on the program by referring to the maximum speeds shown in the table below.

Maximum payload (kg)

	Z stroke (mm)
X stroke (mm)	250 to 550
250 to 1250	20

Controller

Controller	Operation method
RCX320-R	Programming / I/O point trace / Remote command / Operation using RS-232C communication

HXYx 2 axes / ZL F1

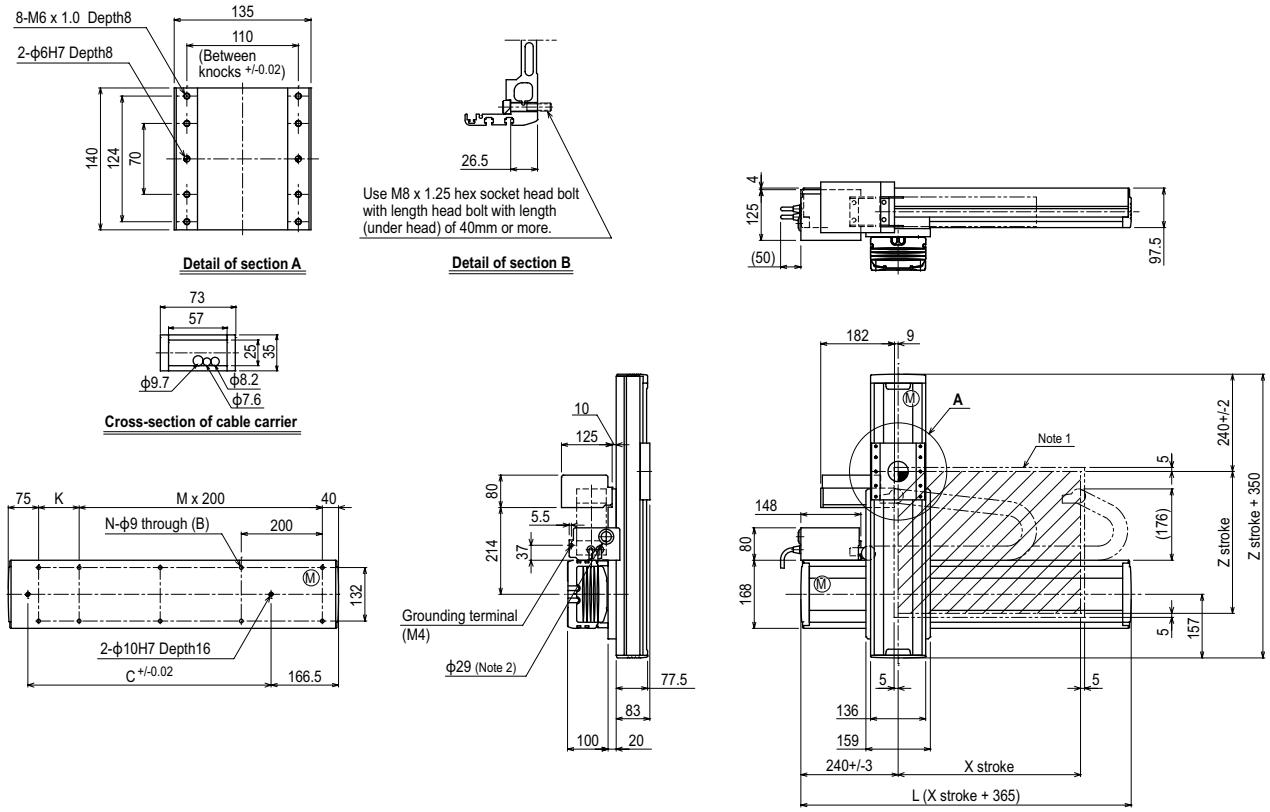

X stroke	250	350	450	550	650	750	850	950	1050	1150	1250
L	615	715	815	915	1015	1115	1215	1315	1415	1515	1615
K	100	200	100	200	100	200	100	200	100	200	100
C	240	420	600	600	780	780	960	960	1140	1140	1320
M	2	2	3	3	4	4	5	5	6	6	7
N	8	8	10	10	12	12	14	14	16	16	18

Z stroke	250	350	450	550
Maximum speed for each stroke (mm/sec) Note 3 — X-axis	1200			
Maximum speed for each stroke (mm/sec) Note 3 — Speed setting	–			

960	840	720	600	480
80%	70%	60%	50%	40%

Note 1. The moving range when returning to origin and the stop position when stopping by the mechanical stopper.
Note 2. User cable extraction port.

Note 3. When the X-axis stroke is longer than 850mm, resonance of the ball screw may occur depending on the operation conditions (critical speed). In this case, reduce the speed setting on the program by referring to the maximum speeds shown in the table at the left.

HXYx 2 axes / ZH

XZ type | Cable carrier | Z-axis: clamped table / moving base type (200W)

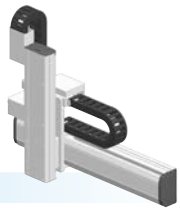

Ordering method

HXYx - C -	[ ]	- [ ]	- ZH -	[ ]	- [ ]	- RCX320-2 -	[ ]	- R -	[ ]	- [ ]	- [ ]	- [ ]
Model	Cable	Combination	X-axis stroke	ZR-axis	Z-axis stroke	Cable	Controller / Number of controllable axes	Safety standard	Regeneratine unit	Option A (OP.A)	Option B (OP.B)	Vision System	Absolute battery
		F1 F3	25 to 125cm		25 to 55cm	3L: 3.5m 5L: 5m 10L: 10m							

Specify various controller setting items. RCX320 ▶ P.626

Specification

	X-axis	Z-axis
Axis construction Note 1	F17	F14H-BK
AC servo motor output (W)	400	200
Repeatability Note 2 (mm)	+/-0.01	+/-0.01
Drive system	Ball screw ϕ20	Ball screw ϕ15
Ball screw lead Note 3 (Deceleration ratio) (mm)	20	5
Maximum speed Note 4 (mm/sec)	1200	300
Moving range (mm)	250 to 1250	250 to 550
Robot cable length (m)	Standard: 3.5 Option: 5,10	

Note 1. Use caution that the flame machining (installation holes, tap holes) differs from single-axis robots'.
Note 2. Positioning repeatability in one direction.
Note 3. Leads not listed in the catalog are also available. Contact us for details.
Note 4. When the X-axis stroke is longer than 850mm, resonance of the ball screw may occur depending on the operation conditions (critical speed). In this case, reduce the speed setting on the program by referring to the maximum speeds shown in the table below.

Maximum payload (kg)

	Z stroke (mm)
X stroke (mm)	250 to 550
250 to 1250	30

Controller

Controller	Operation method
RCX320-R	Programming / I/O point trace / Remote command / Operation using RS-232C communication

HXYx 2 axes / ZH F1

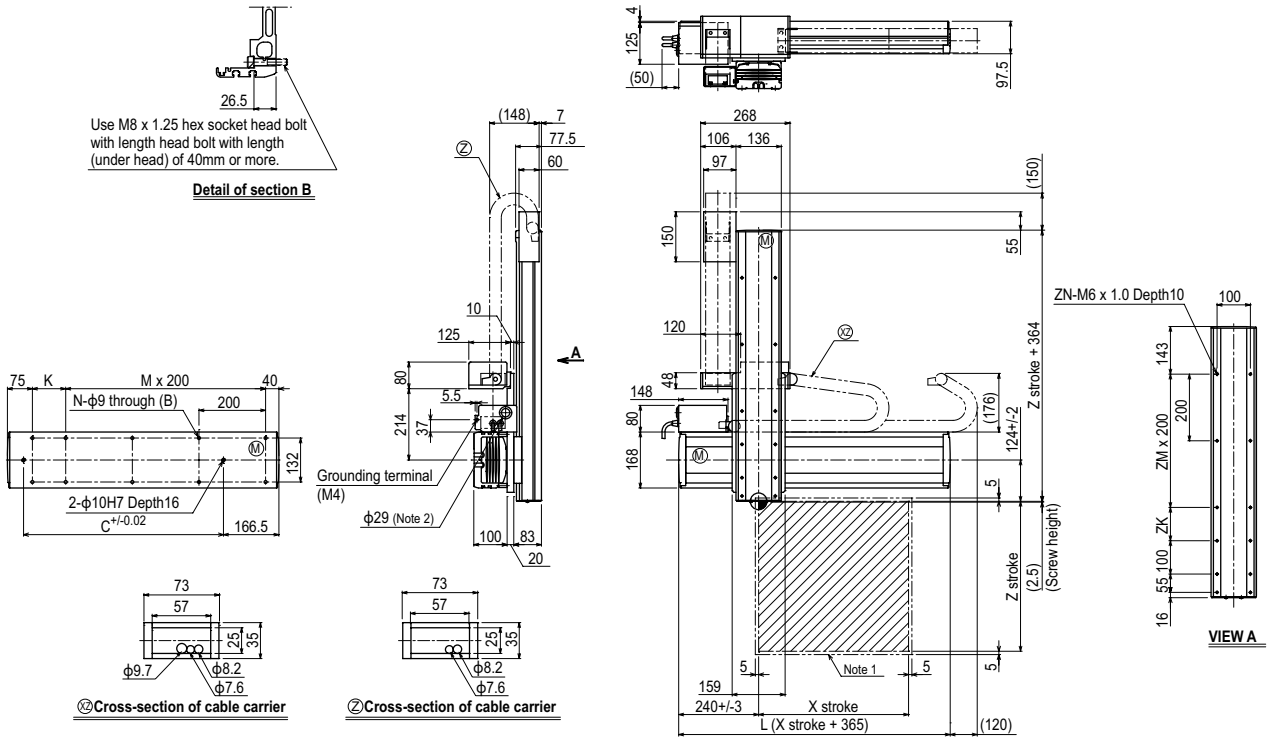

X stroke	250	350	450	550	650	750	850	950	1050	1150	1250
L	615	715	815	915	1015	1115	1215	1315	1415	1515	1615
K	100	200	100	200	100	200	100	200	100	200	100
C	240	420	600	600	780	780	960	960	1140	1140	1320
M	2	2	3	3	4	4	5	5	6	6	7
N	8	8	10	10	12	12	14	14	16	16	18

Z stroke	250	350	450	550
ZK	100	200	100	200
ZM	1	1	2	2
ZN	10	10	12	12

Maximum speed for each stroke (mm/sec) Note 3								
X-axis	1200	960	840	720	600	480
Speed setting	–	80%	70%	60%	50%	40%

Note 1. The moving range when returning to origin and the stop position when stopping by the mechanical stopper.
Note 2. User cable extraction port.

Note 3. When the X-axis stroke is longer than 850mm, resonance of the ball screw may occur depending on the operation conditions (critical speed). In this case, reduce the speed setting on the program by referring to the maximum speeds shown in the table at the left.