ABAS04

Basic model **Single-axis robots**

Slider type

Ordering method

ABAS04 - [ ] [ ] [ ] - [ ] - [ ] [ ] - **EP-01** - [ ] - [ ] - [ ]

Model	Lead	Shape	Motor specification	Stroke	Cable length Note 1	Cable entry location	Robot positioner	Driver: Power capacity	I/O	Battery Note 2
	12: 12 mm 6: 6 mm	S: Straight R: Right bending L: Left bending	S: Standard/With no brake BK: Standard/With brake BL: Battery-less absolute/With no brake BKBL: Battery-less absolute/With brake	50 to 800 (50mm pitch)	R3: 3 m R5: 5 m R10: 10 m	R: From rear of motor F: From front of motor	EP-01	A10: 200W or less	EP: EtherNet/IP™ PT: PROFINET ES: EtherCAT NS: NPN CC: CC-Link	B: With battery N: None

Note 1. The robot cable is flexible and resists bending.
Note 2. When the motor specification is the standard (S, BK), whether to use the battery needs to be selected.

Specifications

AC servo motor output		50 W	
Repeatability Note 1		+/-0.01 mm	
Deceleration mechanism		Shifting position ball screw ϕ 10 (C7 class)	
Stroke		50 mm to 800 mm (50mm pitch)	
Maximum speed Note 2		800 mm/sec	400 mm/sec
Ball screw lead		12 mm	6 mm
Maximum payload	**Horizontal**	12 kg	20 kg
	Vertical	2 kg	5 kg
Rated thrust		71 N	141 N
Maximum dimensions of cross section of main unit		W 44 mm × H 52 mm	
Overall length	**Straight**	ST + 277.5 mm	
	Bending	ST + 196 mm	
Position detector		Absolute encoder Battery-less absolute encoder	
Resolution		23 bits	
Using ambient temperature and humidity		0 to 40 °C, 35 to 80 %RH (non-condensing)	

Note 1. Positioning repeatability in one direction.
Note 2. When a moving distance is short and depending on an operation condition, it may not reach the maximum speed.
If the effective stroke exceeds 500 mm, the ball screw may resonate. (Critical speed)
At this time, make the adjustment to decrease the speed while referring to the maximum speed shown in the table.
Note. See P.98 for acceleration/deceleration.

Allowable overhang Note

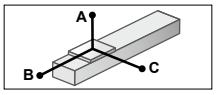

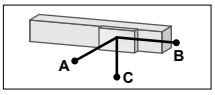

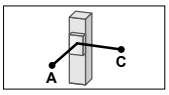

ABAS04-12

Horizontal installation (Unit: mm)

	A	B	C
2kg	1187	271	325
8kg	473	62	77
12kg	431	41	53

Wall installation (Unit: mm)

	A	B	C
2kg	325	271	1187
8kg	77	62	473
12kg	53	41	431

Vertical installation (Unit: mm)

	A	C
1kg	534	534
2kg	265	265

ABAS04-6

Horizontal installation (Unit: mm)

	A	B	C
4kg	1808	155	217
12kg	801	47	65
20kg	546	25	35

Wall installation (Unit: mm)

	A	B	C
4kg	217	155	1808
12kg	65	47	801
20kg	35	25	546

Vertical installation (Unit: mm)

	A	C
1kg	639	639
3kg	208	208
5kg	122	122

Note. Distance from center of slider upper surface to carrier center-of-gravity at a guide service life of 10,000 km.
Note. Service life is calculated for 500mm stroke models.

Controller

Controller	Operation method
EP-01	I/O point trace/Remote command

Static loading moment

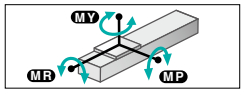

(Unit: N·m)

MY	MP	MR
54	54	75

Access the website below.

▶ **The cycle time simulation and service life calculation can be performed easily from our member site. For details, see P.8.**

ABAS04 Straight type (S)

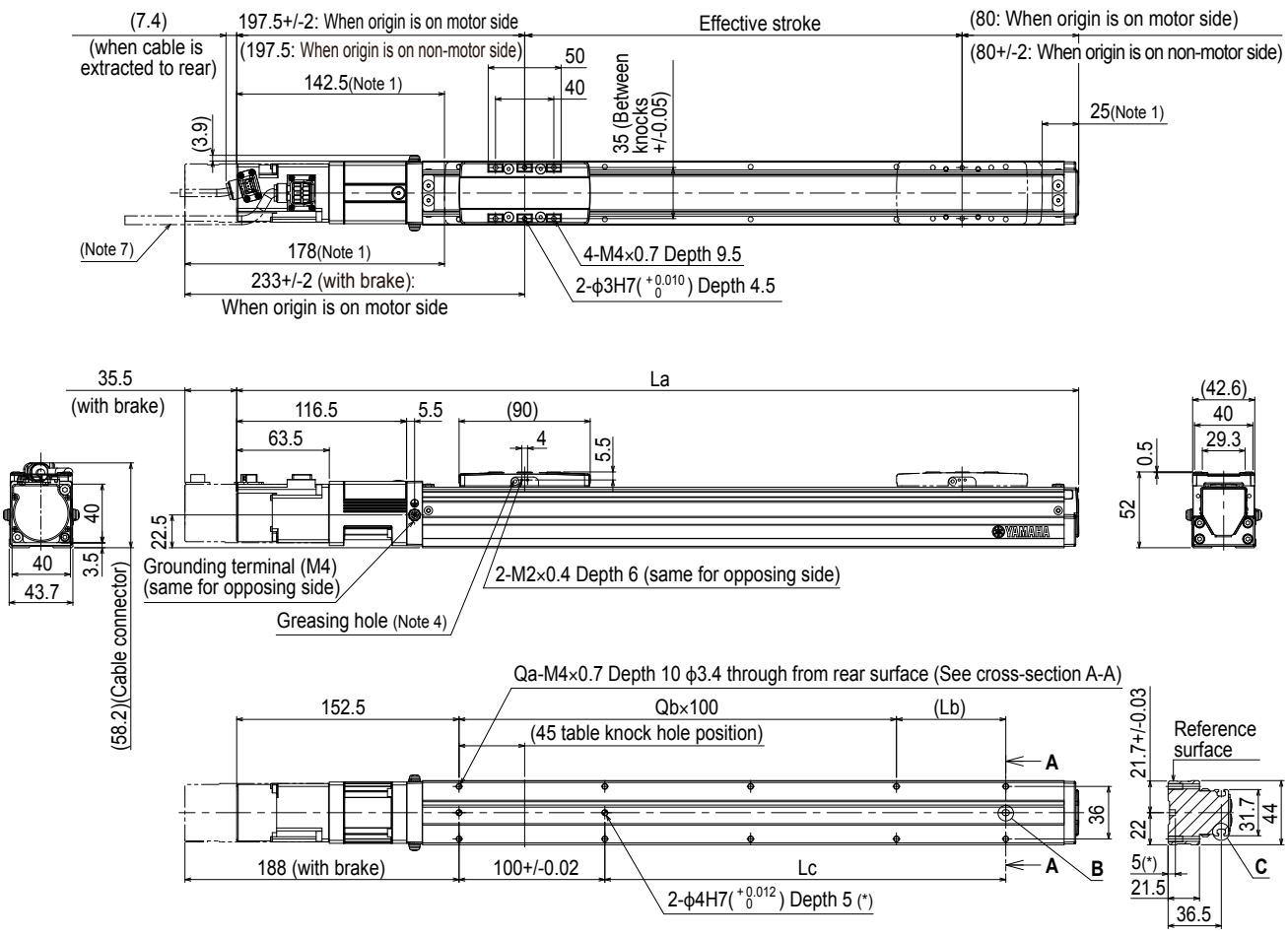

Note 1. Stop positions are determined by the mechanical stoppers at both ends.
Note 2. When changing the return-to-origin direction, the parameter needs to be changed. (The standard is that the origin is located on the motor side.)
Note 3. For the installation through hole, the length under head << 30 mm or more>> is recommended for the hex socket head bolts <M3 × 0.5>. In the installation tap hole, the length under head <<thickness of stand +10 mm or less>> is recommended for the hex socket head bolts <M4 × 0.7> used to install the main unit.
Note 4. Grease gun nozzle (recommended) (see P.135 for detail)
Part number: KFU-M3861-00
Note 5. Weight without brake. The weight with the brake is 0.2 kg heavier than the value in the weight column.
Note 6. The robot cable is extracted from the front.
Note 7. The robot cable is extracted from the rear.
Note 8. The robot cable (with brake) is extracted from the front.
Note 9. The robot cable (with brake) is extracted from the rear.
Note 10. The fixed minimum bending radius of the robot cable is R30.
When using the robot cable as a flexible cable, use it with a minimum bending radius of R50 or more.

Effective stroke		50	100	150	200	250	300	350	400	450	500	550	600	650	700	750	800
La		327.5	377.5	427.5	477.5	527.5	577.5	627.5	677.5	727.5	777.5	827.5	877.5	927.5	977.5	1027.5	1077.5
Lb		25	75	25	75	25	75	25	75	25	75	25	75	25	75	25	75
Lc		25	75	125	175	225	275	325	375	425	475	525	575	625	675	725	775
Qa		6	6	8	8	10	10	12	12	14	14	16	16	18	18	20	20
Qb		1	1	2	2	3	3	4	4	5	5	6	6	7	7	8	8
Weight (kg) Note 5		1.2	1.4	1.6	1.8	1.9	2.1	2.3	2.5	2.7	2.8	3	3.2	3.4	3.6	3.7	3.9
Maximum speed (mm/sec)	Lead 12	800										720	600	480	400	360	320
	Lead 6	400										360	300	240	200	180	160
	Speed setting	–										90%	75%	60%	50%	45%	40%

Controller EP-01 ▶ 138

ABAS04 Bending type (R/L)

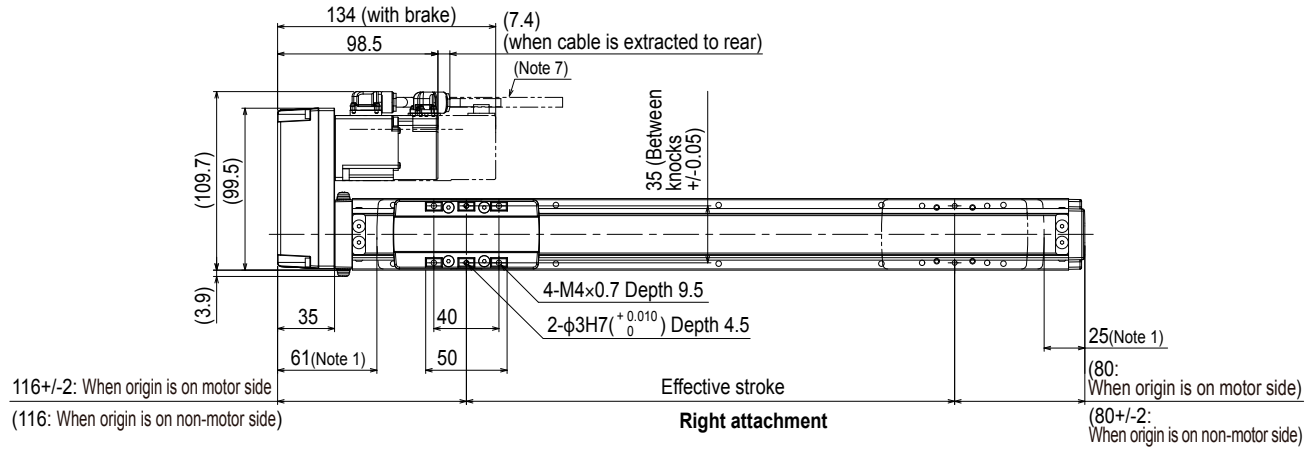

Right attachment

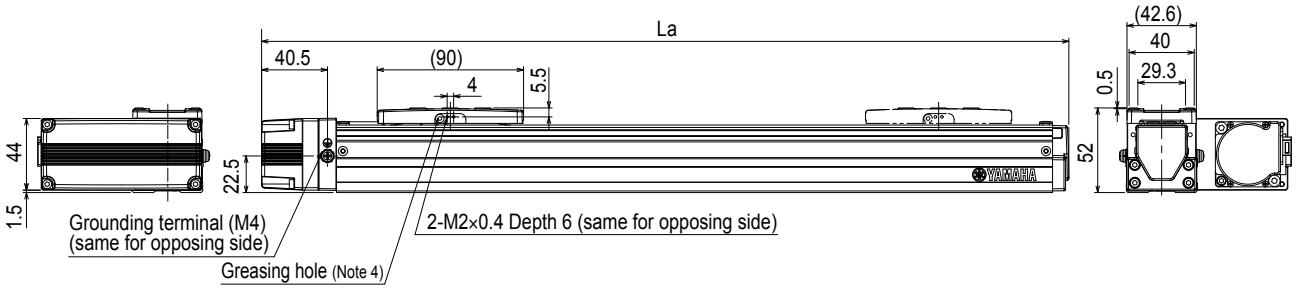

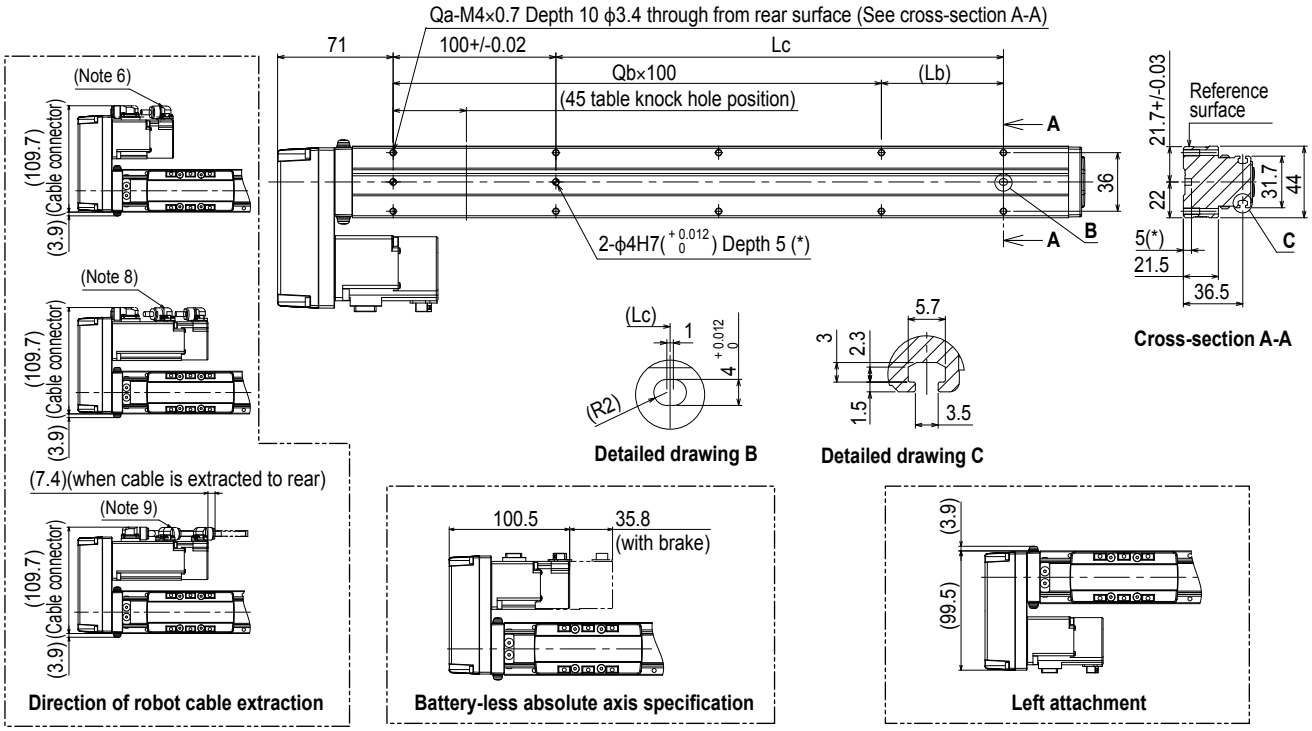

Note 1. Stop positions are determined by the mechanical stoppers at both ends.
Note 2. When changing the return-to-origin direction, the parameter needs to be changed. (The standard is that the origin is located on the motor side.)
Note 3. For the installation through hole, the length under head << 30 mm or more>> is recommended for the hex socket head bolts <M3 × 0.5>. In the installation tap hole, the length under head <<thickness of stand +10 mm or less>> is recommended for the hex socket head bolts <M4 × 0.7> used to install the main unit.
Note 4. Grease gun nozzle (recommended) (see P.135 for detail)
Part number: KFU-M3861-00
Note 5. Weight without brake. The weight with the brake is 0.2 kg heavier than the value in the weight column.
Note 6. The robot cable is extracted from the front.
Note 7. The robot cable is extracted from the rear.
Note 8. The robot cable (with brake) is extracted from the front.
Note 9. The robot cable (with brake) is extracted from the rear.
Note 10. The fixed minimum bending radius of the robot cable is R30.
When using the robot cable as a flexible cable, use it with a minimum bending radius of R50 or more.

Effective stroke		50	100	150	200	250	300	350	400	450	500	550	600	650	700	750	800
La		246	296	346	396	446	496	546	596	646	696	746	796	846	896	946	996
Lb		25	75	25	75	25	75	25	75	25	75	25	75	25	75	25	75
Lc		25	75	125	175	225	275	325	375	425	475	525	575	625	675	725	775
Qa		6	6	8	8	10	10	12	12	14	14	16	16	18	18	20	20
Qb		1	1	2	2	3	3	4	4	5	5	6	6	7	7	8	8
Weight (kg) Note 5		1.4	1.5	1.7	1.9	2.1	2.2	2.4	2.6	2.8	3	3.1	3.3	3.5	3.7	3.9	4
Maximum speed (mm/sec)	Lead 12	800										720	600	480	400	360	320
	Lead 6	400										360	300	240	200	180	160
	Speed setting	–										90%	75%	60%	50%	45%	40%

ABAS05

Basic model | Single-axis robots

Slider type

Ordering method

ABAS05 -				-				-	EP-01 -				-	
Model	Lead	Shape	Motor specification	Stroke	Cable length Note 1	Cable entry location	Robot positioner	Driver: Power capacity	Regenerative unit Note 2	I/O	Battery Note 3
	20: 20 mm 10: 10 mm 5: 5 mm	S: Straight R: Right bending L: Left bending	S: Standard/With no brake BK: Standard/With brake BL: Battery-less absolute/With no brake BKBL: Battery-less absolute/With brake	50 to 800 (50mm pitch)	R3: 3 m R5: 5 m R10: 10 m	R: From rear of motor F: From front of motor	EP-01	A10: 200W or less	No entry: None R: With EP-RU	EP: EtherNet/IP™ PT: PROFINET ES: EtherCAT NS: NPN CC: CC-Link	B: With battery N: None

Note 1. The robot cable is flexible and resists bending.
Note 2. When the actuator is used vertically, lead 5 or 10 is selected, and the stroke is 650 mm or more, the regenerative unit is needed.
Note 3. When the motor specification is the standard (S, BK), whether to use the battery needs to be selected.

Specifications

AC servo motor output		100 W		
Repeatability Note 1		+/-0.01 mm		
Deceleration mechanism		Shifting position ball screw ϕ 12 (C7 class)		
Stroke		50 mm to 800 mm (50 mm pitch)		
Maximum speed Note 2		1333 mm/sec	666 mm/sec	333 mm/sec
Ball screw lead		20 mm	10 mm	5 mm
Maximum payload	Horizontal	12 kg	24 kg	40 kg
	Vertical	3 kg	6 kg	12 kg
Rated thrust		84 N	169 N	339 N
Maximum dimensions of cross section of main unit		W 54 mm × H 60 mm		
Overall length	Straight	ST + 295 mm		
	Bending	ST + 200 mm		
Position detector		Absolute encoder Battery-less absolute encoder		
Resolution		23 bits		
Using ambient temperature and humidity		0 to 40 °C, 35 to 80 %RH (non-condensing)		

Note 1. Positioning repeatability in one direction.
Note 2. When a moving distance is short and depending on an operation condition, it may not reach the maximum speed.
If the effective stroke exceeds 550 mm, the ball screw may resonate. (Critical speed)
At this time, make the adjustment to decrease the speed while referring to the maximum speed shown in the table.
Note. See P.99 for acceleration/deceleration.

Allowable overhang Note

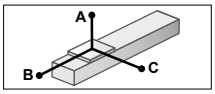

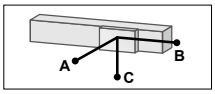

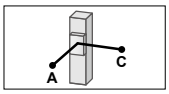

ABAS05-20

Horizontal installation (Unit: mm)

	A	B	C
2kg	549	324	272
8kg	155	73	65
12kg	117	46	42

Wall installation (Unit: mm)

	A	B	C
2kg	272	324	549
8kg	65	73	155
12kg	42	46	117

Vertical installation (Unit: mm)

	A	C
1kg	544	544
2kg	276	276
3kg	195	195

ABAS05-10

Horizontal installation (Unit: mm)

	A	B	C
5kg	769	178	213
15kg	314	53	64
24kg	216	29	36

Wall installation (Unit: mm)

	A	B	C
5kg	213	178	769
15kg	64	53	314
24kg	36	29	216

Vertical installation (Unit: mm)

	A	C
2kg	443	443
4kg	218	218
6kg	142	142

ABAS05-5

Horizontal installation (Unit: mm)

	A	B	C
10kg	921	97	131
25kg	459	33	45
40kg	436	17	23

Wall installation (Unit: mm)

	A	B	C
10kg	131	97	921
25kg	45	33	459
40kg	23	17	436

Vertical installation (Unit: mm)

	A	C
3kg	345	345
8kg	124	124
12kg	79	79

Note. Distance from center of slider upper surface to carrier center-of-gravity at a guide service life of 10,000 km.
Note. Service life is calculated for 500mm stroke models.

Controller

Controller	Operation method
EP-01	I/O point trace/Remote command

Static loading moment

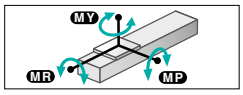

(Unit: N·m)

MY	MP	MR
59	63	103

Access the website below.

▶ The cycle time simulation and service life calculation can be performed easily from our member site. For details, see P.8.

Controller EP-01 ▶ 138

ABAS05 Straight type (S)

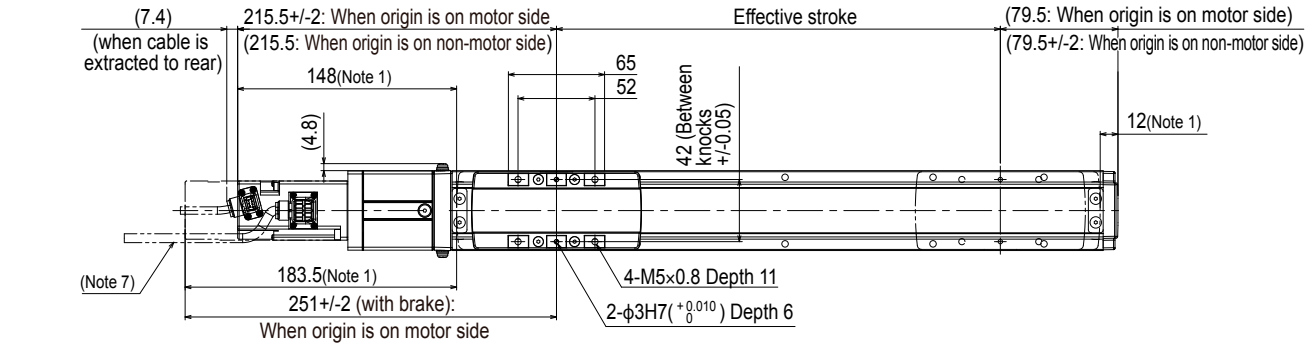

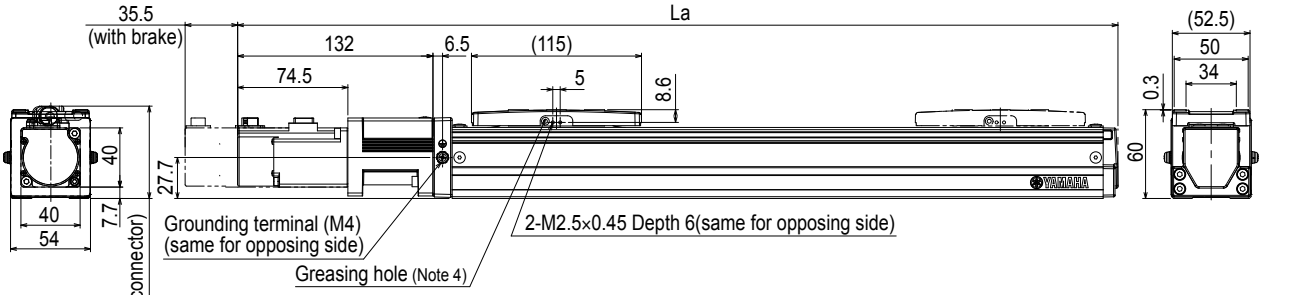

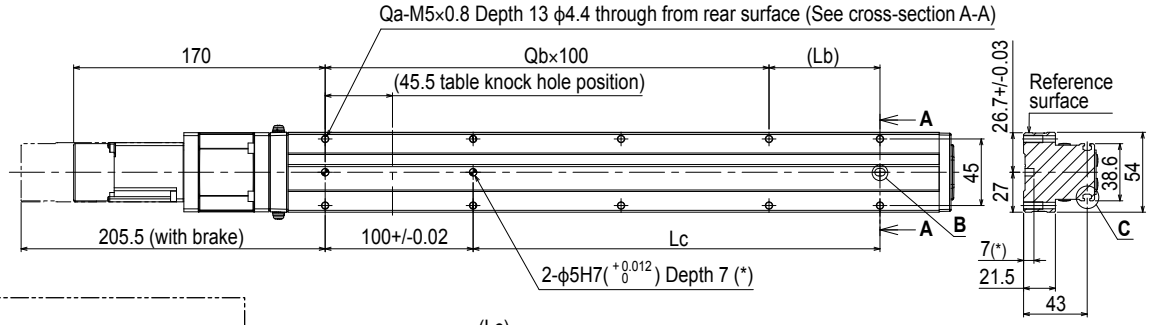

Cross-section A-A

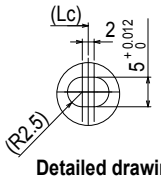

Detailed drawing B

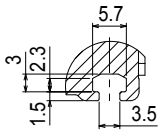

Detailed drawing C

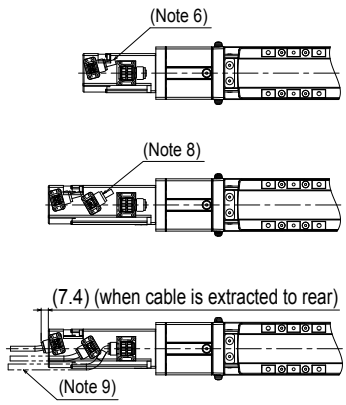

Direction of robot cable extraction

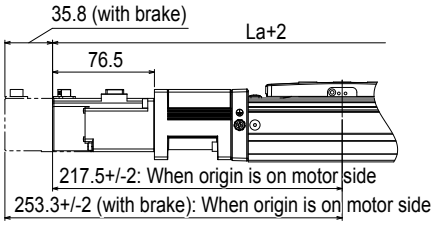

Battery-less absolute axis specification

Note 1. Stop positions are determined by the mechanical stoppers at both ends.
Note 2. When changing the return-to-origin direction, the parameter needs to be changed. (The standard is that the origin is located on the motor side.)
Note 3. For the installation through hole, the length under head << 30 mm or more>> is recommended for the hex socket head bolts <M4 × 0.7>. In the installation tap hole, the length under head <<thickness of stand +10 mm or less>> is recommended for the hex socket head bolts <M5 × 0.8> used to install the main unit.
Note 4. Grease gun nozzle (recommended) (see P.135 for detail)
Part number: KFU-M3861-00
Note 5. Weight without brake. The weight with the brake is 0.2 kg heavier than the value in the weight column.
Note 6. The robot cable is extracted from the front.
Note 7. The robot cable is extracted from the rear.
Note 8. The robot cable (with brake) is extracted from the front.
Note 9. The robot cable (with brake) is extracted from the rear.
Note 10. The fixed minimum bending radius of the robot cable is R30.
When using the robot cable as a flexible cable, use it with a minimum bending radius of R50 or more.

Effective stroke		50	100	150	200	250	300	350	400	450	500	550	600	650	700	750	800
La		345	395	445	495	545	595	645	695	745	795	845	895	945	995	1045	1095
Lb		25	75	25	75	25	75	25	75	25	75	25	75	25	75	25	75
Lc		25	75	125	175	225	275	325	375	425	475	525	575	625	675	725	775
Qa		6	6	8	8	10	10	12	12	14	14	16	16	18	18	20	20
Qb		1	1	2	2	3	3	4	4	5	5	6	6	7	7	8	8
Weight (kg) Note 5		2	2.2	2.3	2.5	2.8	2.9	2.9	3.1	3.2	3.3	3.5	3.7	3.8	4	4.1	4.5
Maximum speed (mm/sec)	Lead 20	1333											1133	933	799	666	599
	Lead 10	666											566	466	399	333	299
	Lead 5	333											283	233	199	166	149
	Speed setting	–											85%	70%	60%	50%	45%

Controller EP-01 ▶ 138

ABAS05 Bending type (R/L)

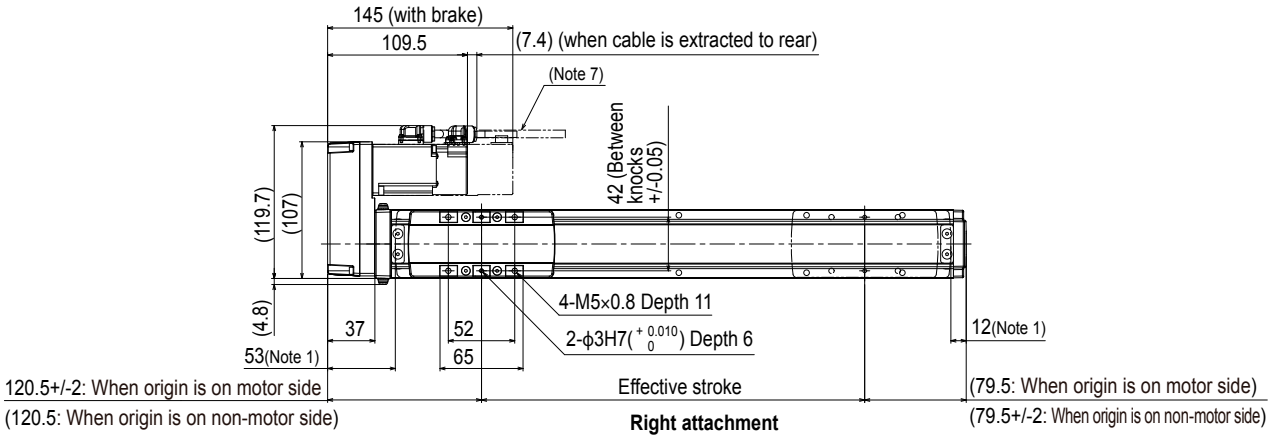

Right attachment

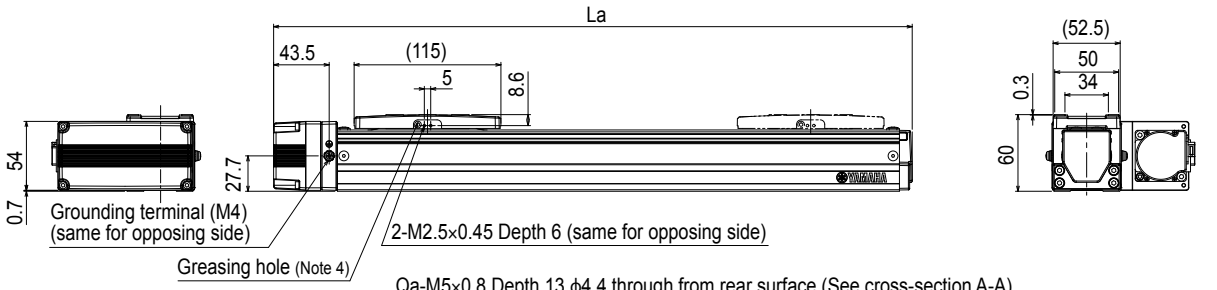

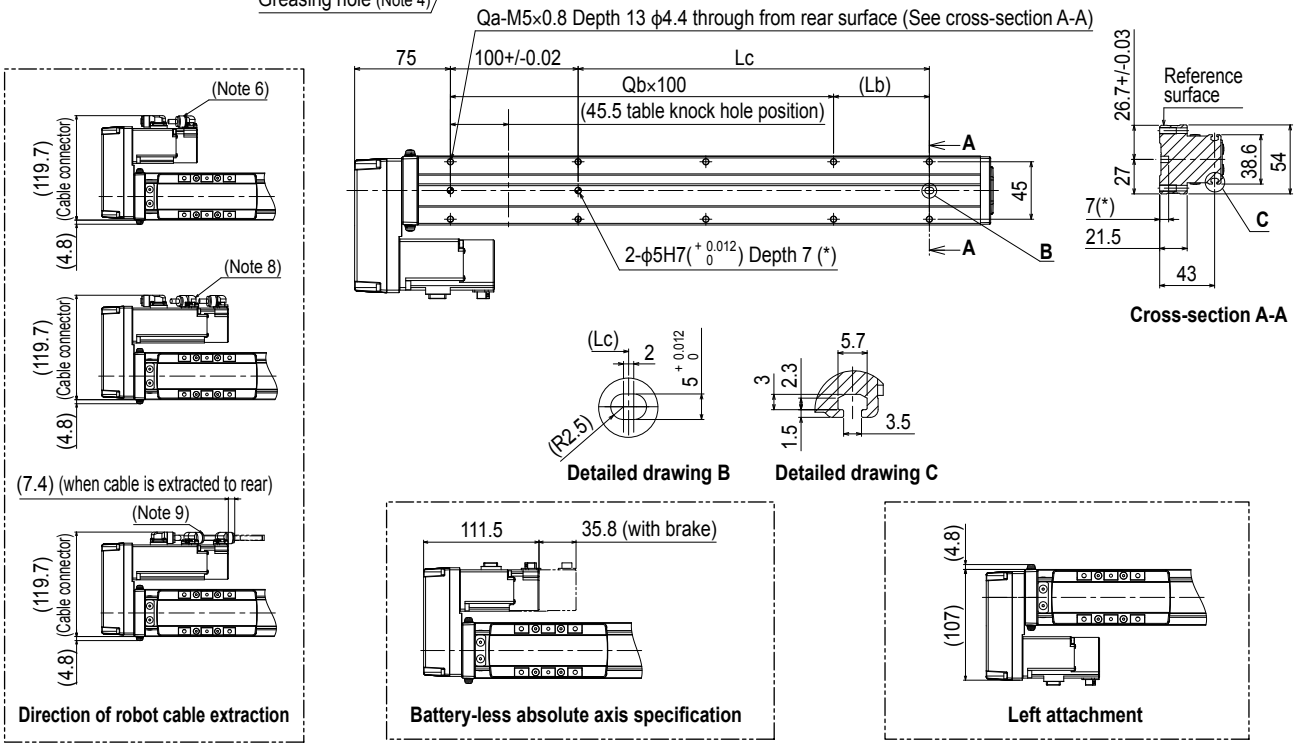

Note 1. Stop positions are determined by the mechanical stoppers at both ends.
Note 2. When changing the return-to-origin direction, the parameter needs to be changed. (The standard is that the origin is located on the motor side.)
Note 3. For the installation through hole, the length under head << 30 mm or more>> is recommended for the hex socket head bolts <M3 × 0.5>. In the installation tap hole, the length under head <<thickness of stand +10 mm or less>> is recommended for the hex socket head bolts <M4 × 0.7> used to install the main unit.
Note 4. Grease gun nozzle (recommended) (see P.135 for detail)
Part number: KFU-M3861-00
Note 5. Weight without brake. The weight with the brake is 0.2 kg heavier than the value in the weight column.
Note 6. The robot cable is extracted from the front.
Note 7. The robot cable is extracted from the rear.
Note 8. The robot cable (with brake) is extracted from the front.
Note 9. The robot cable (with brake) is extracted from the rear.
Note 10. The fixed minimum bending radius of the robot cable is R30.
When using the robot cable as a flexible cable, use it with a minimum bending radius of R50 or more.

Effective stroke		50	100	150	200	250	300	350	400	450	500	550	600	650	700	750	800
La		250	300	350	400	450	500	550	600	650	700	750	800	850	900	950	1000
Lb		25	75	25	75	25	75	25	75	25	75	25	75	25	75	25	75
Lc		25	75	125	175	225	275	325	375	425	475	525	575	625	675	725	775
Qa		6	6	8	8	10	10	12	12	14	14	16	16	18	18	20	20
Qb		1	1	2	2	3	3	4	4	5	5	6	6	7	7	8	8
Weight (kg) Note 5		2.1	2.2	2.4	2.6	2.8	3	3	3.2	3.3	3.4	3.6	3.7	3.9	4	4.2	4.5
Maximum speed (mm/sec)	Lead 20	1333											1133	933	799	666	599
	Lead 10	666											566	466	399	333	299
	Lead 5	333											283	233	199	166	149
	Speed setting	–											85%	70%	60%	50%	45%

ABAS08

Basic model | Single-axis robots | Slider type

Ordering method

ABAS08 -	Lead	Shape	Motor specification	Stroke	Cable length [Note 1]	Cable entry location	- EP-01 - Robot positioner	Driver: Power capacity	Regenerative unit [Note 2]	I/O	Battery [Note 3]
Model	20: 20 mm 10: 10 mm 5: 5 mm	S: Straight R: Right bending L: Left bending	S: Standard/With no brake BK: Standard/With brake BL: Battery-less absolute/With no brake BKBL: Battery-less absolute/With brake	50 to 1100 (50mm pitch)	R3: 3 m R5: 5 m R10: 10 m	R: From rear of motor F: From front of motor	EP-01	A10: 200W or less	No entry: None R: With EP-RU	EP: EtherNet/IP™ PT: PROFINET ES: EtherCAT NS: NPN CC: CC-Link	B: With battery N: None

Note 1. The robot cable is flexible and resists bending.
Note 2. When the actuator is used vertically and the stroke of lead 5 or 20 is 450 mm or more or the stroke of lead 10 is 150 mm or more, the regenerative unit is needed.
When the actuator is used horizontally and the stroke of lead 20 is 250 to 750 mm, the regenerative unit is needed.
Note 3. When the motor specification is the standard (S, BK), whether to use the battery needs to be selected.

Specifications

AC servo motor output		200 W		
Repeatability [Note 1]		+/-0.01 mm		
Deceleration mechanism		Shifting position ball screw ϕ 16 (C7 class)		
Stroke		50 mm to 1100 mm (50 mm pitch)		
Maximum speed [Note 2]		1200 mm/sec	600 mm/sec	300 mm/sec
Ball screw lead		20 mm	10 mm	5 mm
Maximum payload	Horizontal	40 kg	80 kg	100 kg
	Vertical	8 kg	20 kg	30 kg
Rated thrust		174 N	341 N	683 N
Maximum dimensions of cross section of main unit		W 82 mm × H 78 mm		
Overall length	Straight	ST + 353 mm		
	Bending	ST + 264.5 mm		
Position detector		Absolute encoder Battery-less absolute encoder		
Resolution		23 bits		
Using ambient temperature and humidity		0 to 40 °C, 35 to 80 %RH (non-condensing)		

Note 1. Positioning repeatability in one direction.
Note 2. When a moving distance is short and depending on an operation condition, it may not reach the maximum speed.
If the effective stroke exceeds 650 mm, the ball screw may resonate. (Critical speed)
At this time, make the adjustment to decrease the speed while referring to the maximum speed shown in the table.
Note. See P.101 for acceleration/deceleration.

Allowable overhang [Note]

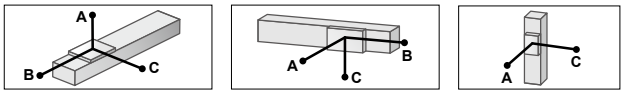

ABAS08-20

Horizontal installation (Unit: mm)

	A	B	C
15kg	356	131	146
25kg	278	73	86
40kg	517	54	76

Wall installation (Unit: mm)

	A	B	C
15kg	146	131	356
25kg	86	73	278
40kg	76	54	517

Vertical installation (Unit: mm)

	A	C
3kg	634	634
6kg	321	321
8kg	240	240

ABAS08-10

Horizontal installation (Unit: mm)

	A	B	C
30kg	465	83	120
50kg	341	44	65
80kg	228	22	34

Wall installation (Unit: mm)

	A	B	C
30kg	120	83	465
50kg	65	44	341
80kg	34	22	228

Vertical installation (Unit: mm)

	A	C
5kg	551	551
10kg	270	270
20kg	129	129

ABAS08-5

Horizontal installation (Unit: mm)

	A	B	C
30kg	1604	95	153
50kg	1035	52	83
80kg	719	27	44
100kg	608	19	31

Wall installation (Unit: mm)

	A	B	C
30kg	153	95	1604
50kg	83	52	1035
80kg	44	27	719
100kg	31	19	608

Vertical installation (Unit: mm)

	A	C
10kg	312	312
20kg	149	149
30kg	95	95

Note. Distance from center of slider upper surface to carrier center-of-gravity at a guide service life of 10,000 km.
Note. Service life is calculated for 600mm stroke models.

Controller

Controller	Operation method
EP-01	I/O point trace/Remote command

Static loading moment

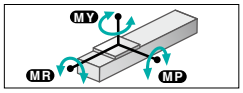

(Unit: N·m)

MY	MP	MR
221	309	343

Access the website below.

YAMAHA

▶ **The cycle time simulation and service life calculation can be performed easily from our member site. For details, see P.8.**

Controller EP-01 ▶ 138

ABAS08 Straight type (S)

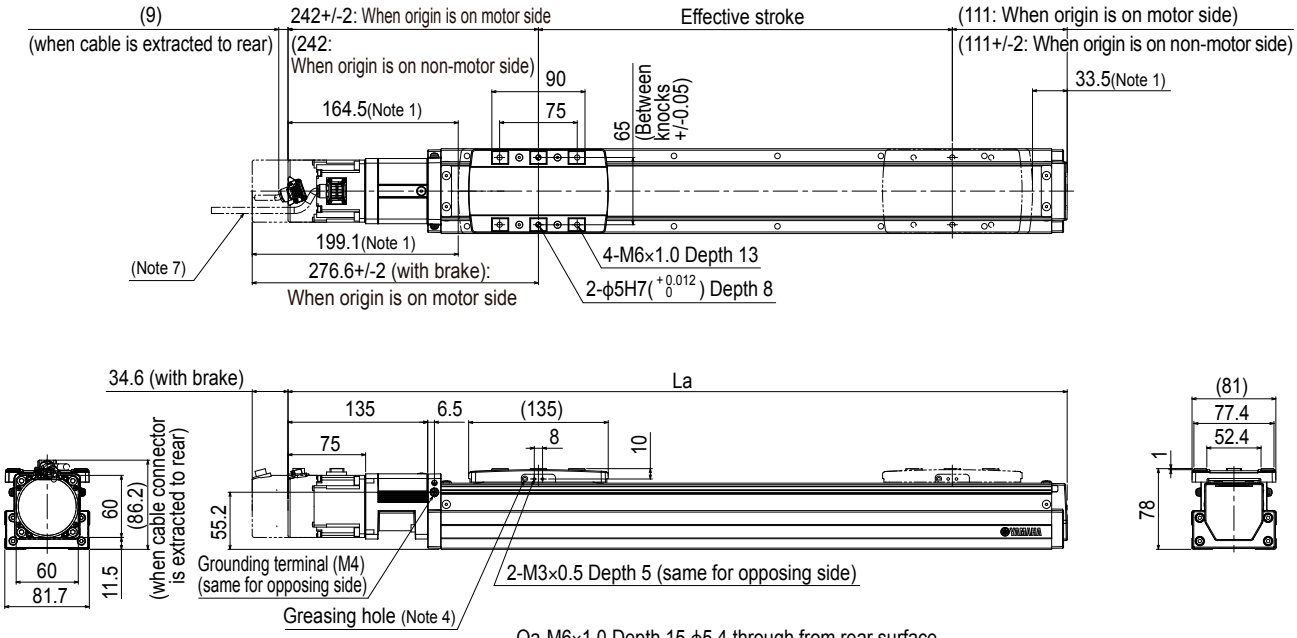

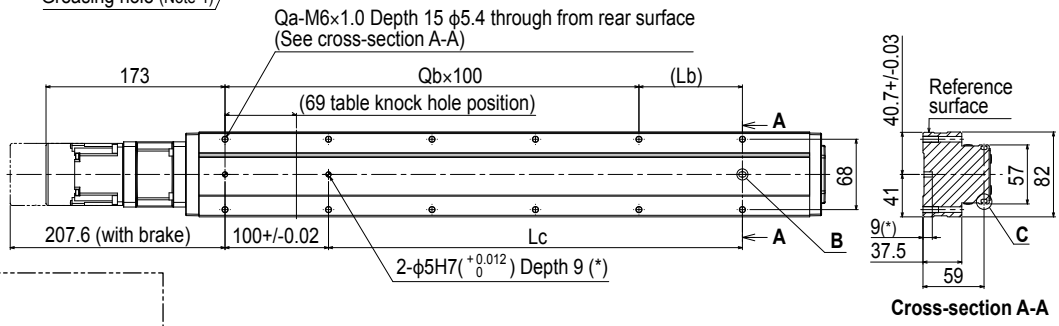

Cross-section A-A

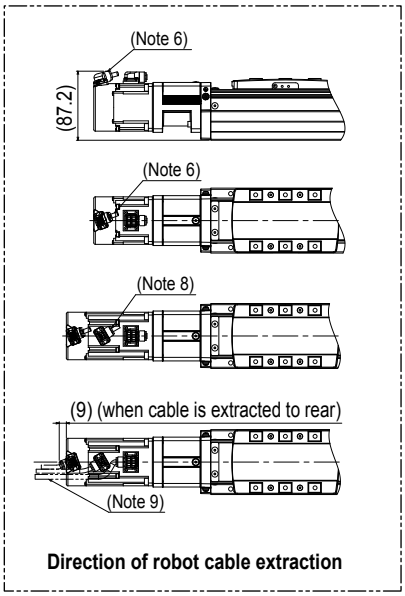

Direction of robot cable extraction

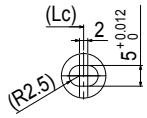

Detailed drawing B

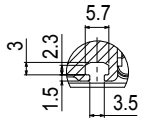

Detailed drawing C

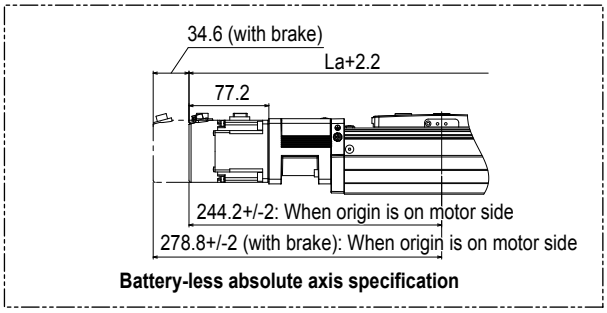

Battery-less absolute axis specification

Note 1. Stop positions are determined by the mechanical stoppers at both ends.
Note 2. When changing the return-to-origin direction, the parameter needs to be changed. (The standard is that the origin is located on the motor side.)
Note 3. For the installation through hole, the length under head << 45 mm or more>> is recommended for the hex socket head bolts <M5 × 0.8>. In the installation tap hole, the length under head <<thickness of stand +15 mm or less>> is recommended for the hex socket head bolts <M6 × 1.0> used to install the main unit.
Note 4. Grease gun nozzle (recommended) (see P.135 for detail) Part number: KFU-M3861-00
Note 5. Weight without brake. The weight with the brake is 0.4 kg heavier than the value in the weight column.
Note 6. The robot cable is extracted from the front.
Note 7. The robot cable is extracted from the rear.
Note 8. The robot cable (with brake) is extracted from the front.
Note 9. The robot cable (with brake) is extracted from the rear.
Note 10. The fixed minimum bending radius of the robot cable is R30. When using the robot cable as a flexible cable, use it with a minimum bending radius of R50 or more.

Effective stroke		50	100	150	200	250	300	350	400	450	500	550	600	650	700	750	800	850	900	950	1000	1050	1100
La		403	453	503	553	603	653	703	753	803	853	903	953	1003	1053	1103	1153	1203	1253	1303	1353	1403	1453
Lb		50	100	50	100	50	100	50	100	50	100	50	100	50	100	50	100	50	100	50	100	50	100
Lc		50	100	150	200	250	300	350	400	450	500	550	600	650	700	750	800	850	900	950	1000	1050	1100
Qa		6	6	8	8	10	10	12	12	14	14	16	16	18	18	20	20	22	22	24	24	26	26
Qb		1	1	2	2	3	3	4	4	5	5	6	6	7	7	8	8	9	9	10	10	11	11
Weight (kg) Note 5		4.5	4.9	5.3	5.6	6	6.3	6.6	7	7.3	7.6	8	8.3	8.7	9	9.3	9.6	10	10.2	10.6	10.9	11.3	11.7
Maximum speed (mm/sec)	Lead 20	1200													1020	900	780	660	600	540	480	420	360
	Lead 10	600													510	450	390	330	300	270	240	210	180
	Lead 5	300													255	225	195	165	150	135	120	105	90
	Speed setting	–													85%	75%	65%	55%	50%	45%	40%	35%	30%

Controller EP-01 ▶ 138

ABAS08 Bending type (R/L)

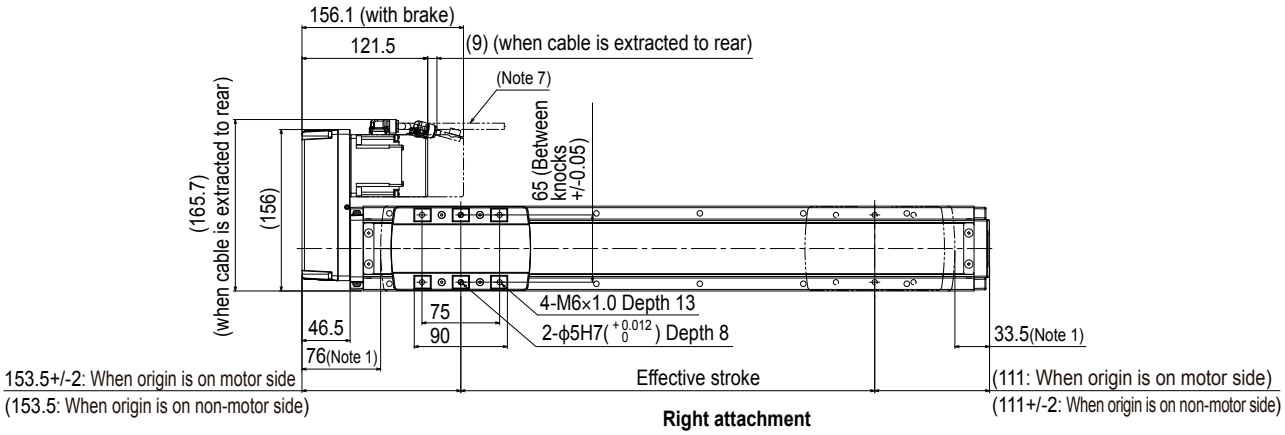

Right attachment

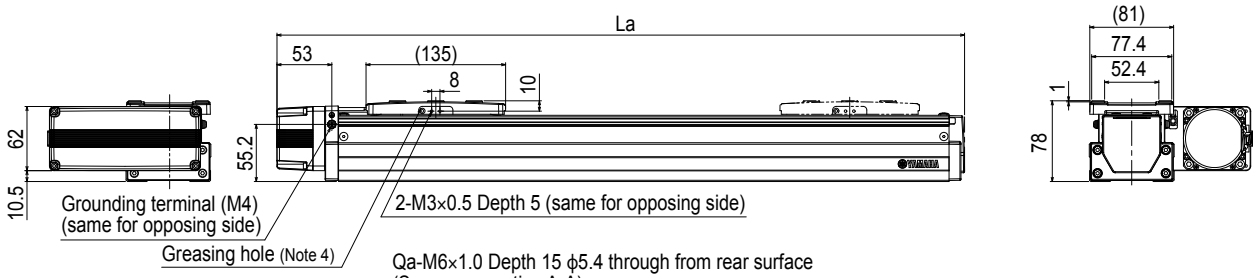

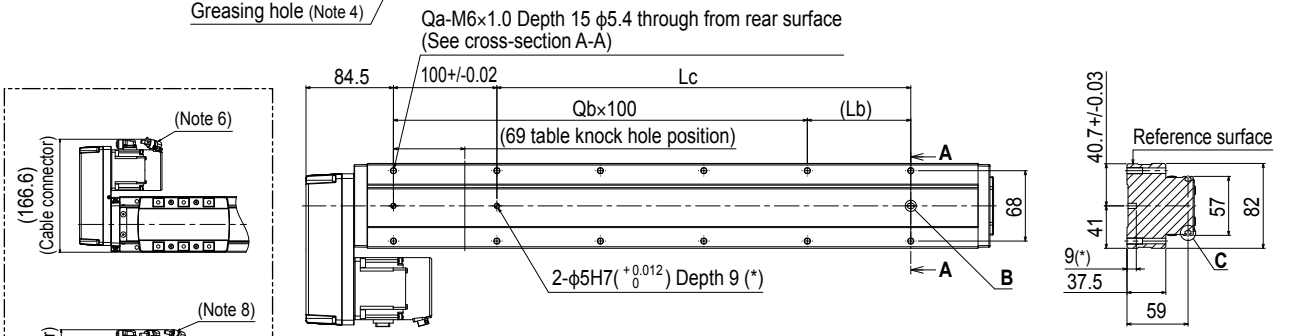

Cross-section A-A

Detailed drawing B **Detailed drawing C**

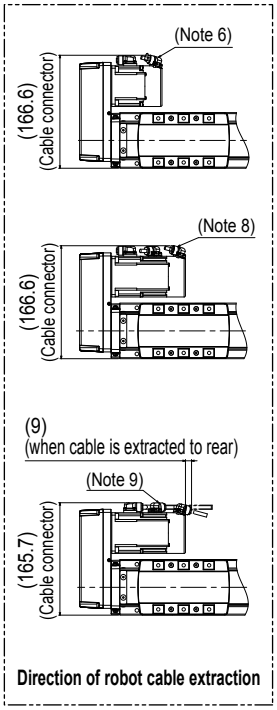

Direction of robot cable extraction

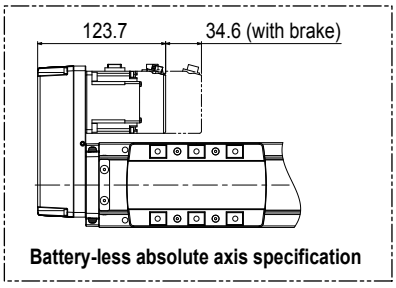

Battery-less absolute axis specification

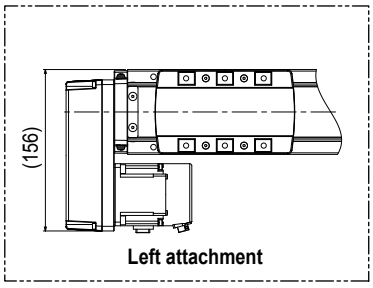

Left attachment

Note 1. Stop positions are determined by the mechanical stoppers at both ends.
Note 2. When changing the return-to-origin direction, the parameter needs to be changed. (The standard is that the origin is located on the motor side.)
Note 3. For the installation through hole, the length under head << 45 mm or more>> is recommended for the hex socket head bolts <M5 × 0.8>. In the installation tap hole, the length under head <<thickness of stand +15 mm or less>> is recommended for the hex socket head bolts <M6 × 1.0> used to install the main unit.
Note 4. Grease gun nozzle (recommended) (see P.135 for detail)
Part number: KFU-M3861-00
Note 5. Weight without brake. The weight with the brake is 0.4 kg heavier than the value in the weight column.
Note 6. The robot cable is extracted from the front.
Note 7. The robot cable is extracted from the rear.
Note 8. The robot cable (with brake) is extracted from the front.
Note 9. The robot cable (with brake) is extracted from the rear.
Note 10. The fixed minimum bending radius of the robot cable is R30.
When using the robot cable as a flexible cable, use it with a minimum bending radius of R50 or more.

Effective stroke		50	100	150	200	250	300	350	400	450	500	550	600	650	700	750	800	850	900	950	1000	1050	1100
La		314.5	364.5	414.5	464.5	514.5	564.5	614.5	664.5	714.5	764.5	814.5	864.5	914.5	964.5	1014.5	1064.5	1114.5	1164.5	1214.5	1264.5	1314.5	1364.5
Lb		50	100	50	100	50	100	50	100	50	100	50	100	50	100	50	100	50	100	50	100	50	100
Lc		50	100	150	200	250	300	350	400	450	500	550	600	650	700	750	800	850	900	950	1000	1050	1100
Qa		6	6	8	8	10	10	12	12	14	14	16	16	18	18	20	20	22	22	24	24	26	26
Qb		1	1	2	2	3	3	4	4	5	5	6	6	7	7	8	8	9	9	10	10	11	11
Weight (kg) Note 5		4.9	5.3	5.7	6	6.4	6.7	7	7.4	7.7	8	8.4	8.7	9.1	9.4	9.7	10	10.4	10.6	11	11.3	11.7	12.1
Maximum speed (mm/sec)	Lead 20	1200													1020	900	780	660	600	540	480	420	360
	Lead 10	600													510	450	390	330	300	270	240	210	180
	Lead 5	300													255	225	195	165	150	135	120	105	90
	Speed setting	–													85%	75%	65%	55%	50%	45%	40%	35%	30%

Controller EP-01 ▶ 138

ABAS12/ABAS12H

Basic model | Single-axis robots | Slider type | Slim type

Ordering method

Model	Lead	Shape	Motor specification	Stroke	Cable length (Note 1)	Cable entry location	Robot positioner	Driver: Power capacity	Regenerative unit (Note 2)	I/O	Battery (Note 3)
ABAS12: 200W ABAS12H: 400W	32: 32 mm 20: 20 mm 10: 10 mm 5: 5 mm	S: Straight R: Right bending L: Left bending	S: Standard/With no brake BK: Standard/With brake BL: Battery-less absolute/With no brake BKBL: Battery-less absolute/With brake	50 to 1250 (50mm pitch)	R3: 3 m R5: 5 m R10: 10 m	R: From rear of motor F: From front of motor	EP-01	A10: 200W or less A30:400W/750W	No entry: None R: With EP-RU	EP: EtherNet/IP™ PT: PROFINET ES: EtherCAT NS: NPN CC: CC-Link	B: With battery N: None

Note 1. The robot cable is flexible and resists bending.
Note 2. [For ABAS12]
When the actuator is used vertically and the stroke of lead 5, 10, or 20 is 150 mm or more or the stroke of lead 32 is 300 to 750 mm, the regenerative unit is needed.
When the actuator is used horizontally and the stroke of lead 10 or 20 is 250 to 750 mm or the stroke of lead 32 is 400 to 750 mm, the regenerative unit is needed.
[For ABAS12H]
When the actuator is used vertically and the stroke of lead 5, 10, or 20 is 300 mm or more or the stroke of lead 32 is 300 to 750 mm, the regenerative unit is needed.
Note 3. When the motor specification is the standard (S, BK), whether to use the battery needs to be selected.

ABAS12 (200W)

Specifications

AC servo motor output		200 W			
Repeatability (Note 1)		+/-0.01 mm			
Deceleration mechanism		Shifting position ball screw ϕ 16 (C7 class)			
Stroke		50 mm to 1250 mm (50 mm pitch)			
Maximum speed (Note 2)		1800 mm/sec	1200 mm/sec	600 mm/sec	300 mm/sec
Ball screw lead		32 mm	20 mm	10 mm	5 mm
Maximum payload	Horizontal	20 kg	40 kg	80 kg	100 kg
	Vertical	3 kg	8 kg	20 kg	30 kg
Rated thrust		105 N	170 N	341 N	683 N
Maximum dimensions of cross section of main unit		W 120 mm × H 76 mm			
Overall length	Straight	ST + 369 mm			
	Bending	ST + 270.5 mm			
Position detector		Absolute encoder Battery-less absolute encoder			
Resolution		23 bits			
Using ambient temperature and humidity		0 to 40 °C, 35 to 80 %RH (non-condensing)			

Note 1. Positioning repeatability in one direction.
Note 2. When a moving distance is short and depending on an operation condition, it may not reach the maximum speed.
If the effective stroke exceeds 600 mm, the ball screw may resonate. (Critical speed)
At this time, make the adjustment to decrease the speed while referring to the maximum speed shown in the table.
Note. See P.103 for acceleration/deceleration.

Allowable overhang (Note)

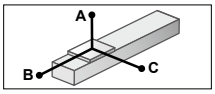

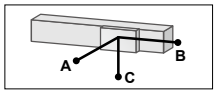

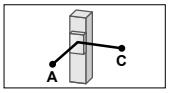

ABAS12-32

Horizontal installation (Unit: mm)

	A	B	C
5kg	2079	1694	1224
10kg	1135	834	627
20kg	842	422	362

Wall installation (Unit: mm)

	A	B	C
5kg	1224	1694	2079
10kg	627	834	1135
20kg	362	422	842

Vertical installation (Unit: mm)

	A	C
1kg	6201	6201
3kg	2057	2057

ABAS12-20

Horizontal installation (Unit: mm)

	A	B	C
15kg	946	548	445
25kg	591	321	266
40kg	441	205	182

Wall installation (Unit: mm)

	A	B	C
15kg	445	548	946
25kg	266	321	591
40kg	182	205	441

Vertical installation (Unit: mm)

	A	C
3kg	2174	2174
5kg	1315	1315
8kg	833	833

ABAS12-10

Horizontal installation (Unit: mm)

	A	B	C
30kg	729	299	278
50kg	786	207	223
80kg	1328	157	200

Wall installation (Unit: mm)

	A	B	C
30kg	278	299	729
50kg	223	207	786
80kg	200	157	1328

Vertical installation (Unit: mm)

	A	C
5kg	1933	1933
10kg	977	977
20kg	503	503

ABAS12-5

Horizontal installation (Unit: mm)

	A	B	C
30kg	2476	430	513
50kg	1817	258	320
80kg	1517	160	208
100kg	1436	127	168

Wall installation (Unit: mm)

	A	B	C
30kg	513	430	2476
50kg	320	258	1817
80kg	208	160	1517
100kg	168	127	1436

Vertical installation (Unit: mm)

	A	C
10kg	1317	1317
20kg	670	670
30kg	455	455

Note. Distance from center of slider upper surface to carrier center-of-gravity at a guide service life of 10,000 km.
Note. Service life is calculated for 600mm stroke models.

Static loading moment

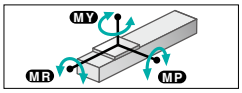

(Unit: N·m)

MY	MP	MR
573	606	606

Controller

Controller	Operation method
EP-01	I/O point trace/ Remote command

ABAS12H (400W)

Specifications

AC servo motor output		400 W			
Ball screw lead		32 mm	20 mm	10 mm	5 mm
Maximum payload	Horizontal	35 kg	50 kg	95 kg	115 kg
	Vertical	8 kg	15 kg	25 kg	40 kg
Rated thrust		218 N	339 N	678 N	1360 N
Overall length	Straight	ST + 385 mm			
	Bending	ST + 270.5 mm			

Note. See P.105 for acceleration/deceleration.
Note. The specifications and static loading moment, etc. not described here are common to ABAS12.

Allowable overhang (Note)

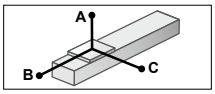

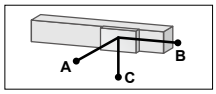

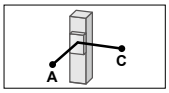

ABAS12H-32

Horizontal installation (Unit: mm)

	A	B	C
10kg	1135	834	627
20kg	842	422	362
35kg	925	286	294

Wall installation (Unit: mm)

	A	B	C
10kg	627	834	1135
20kg	362	422	842
35kg	294	286	925

Vertical installation (Unit: mm)

	A	C
3kg	2057	2057
5kg	1228	1228
8kg	762	833

ABAS12H-20

Horizontal installation (Unit: mm)

	A	B	C
15kg	826	548	427
30kg	485	263	218
50kg	433	172	162

Wall installation (Unit: mm)

	A	B	C
15kg	427	548	826
30kg	218	263	485
50kg	162	172	433

Vertical installation (Unit: mm)

	A	C
5kg	1315	1315
10kg	672	672
15kg	522	660

ABAS12H-10

Horizontal installation (Unit: mm)

	A	B	C
30kg	528	270	230
60kg	665	171	185
95kg	1347	132	173

Wall installation (Unit: mm)

	A	B	C
30kg	230	270	528
60kg	185	171	665
95kg	173	132	1347

Vertical installation (Unit: mm)

	A	C
5kg	1933	1933
15kg	660	660
25kg	409	541

ABAS12H-5

Horizontal installation (Unit: mm)

	A	B	C
30kg	2476	430	513
60kg	1672	215	270
90kg	1474	141	186
115kg	1378	109	146

Wall installation (Unit: mm)

	A	B	C
30kg	513	430	2476
60kg	270	215	1672
90kg	186	141	1474
115kg	146	109	1378

Vertical installation (Unit: mm)

	A	C
15kg	885	885
25kg	541	541
40kg	350	350

Note. Distance from center of slider upper surface to carrier center-of-gravity at a guide service life of 10,000 km.
Note. Service life is calculated for 600mm stroke models.

Access the website below.

YAMAHA

▶ **The cycle time simulation and service life calculation can be performed easily from our member site. For details, see P.8.**

ABAS12 Straight type (S)

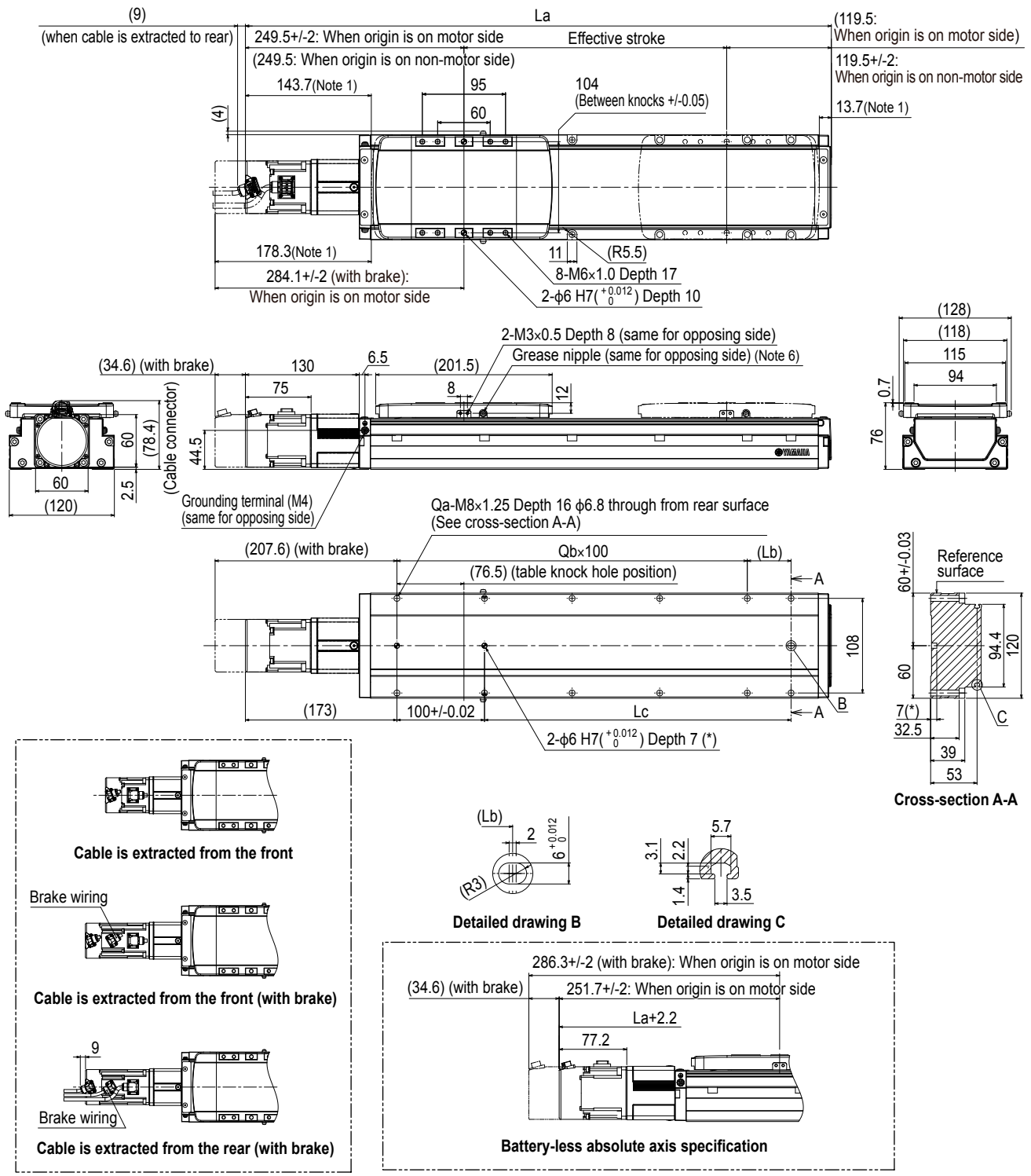

Note 1. Stop positions are determined by the mechanical stoppers at both ends.
Note 2. When changing the return-to-origin direction, the parameter needs to be changed. (The standard is that the origin is located on the motor side.)
Note 3. For the installation through hole, the length under head << 45 mm or more>> is recommended for the hex socket head bolts <M6 × 1.0>. In the installation tap hole, the length under head <<thickness of stand +16 mm or less>> is recommended for the hex socket head bolts <M8 × 1.25> used to install the main unit.
Note 4. The weight with the brake is 0.4 kg heavier than the value in the weight column.
Note 5. The minimum bending radius of the robot cable is R30 on the fixed side or R50 on the movable side. The cable extraction direction may vary depending on the specifications.
Note 6. Grease gun nozzle (recommended) (see P.135 for detail)

Effective stroke		50	100	150	200	250	300	350	400	450	500	550	600	650	700	750	800	850	900	950	1000	1050	1100	1150	1200	1250
La		419	469	519	569	619	669	719	769	819	869	919	969	1019	1069	1119	1169	1219	1269	1319	1369	1419	1469	1519	1569	1619
Lb		100	50	100	50	100	50	100	50	100	50	100	50	100	50	100	50	100	50	100	50	100	50	100	50	100
Lc		100	150	200	250	300	350	400	450	500	550	600	650	700	750	800	850	900	950	1000	1050	1100	1150	1200	1250	1300
Qa		6	8	8	10	10	12	12	14	14	16	16	18	18	20	20	22	22	24	24	26	26	28	28	30	30
Qb		1	2	2	3	3	4	4	5	5	6	6	7	7	8	8	9	9	10	10	11	11	12	12	13	13
Weight (kg) Note 4		5.3	5.7	6.1	6.5	6.9	7.3	7.7	8.1	8.5	8.9	9.4	9.8	10.2	10.7	11.1	11.5	12	12.4	12.9	13.3	13.7	14.2	14.6	15.1	15.5
Maximum speed (mm/sec)	Lead 32	1800												1620	1440	1260	1080	990	810	720	630	630	540	450	360	360
	Lead 20	1200												1080	960	840	720	660	540	480	420	420	360	300	240	240
	Lead 10	600												540	480	420	360	330	270	240	210	210	180	150	120	120
	Lead 5	300												270	240	210	180	165	135	120	105	105	90	75	60	60
	Speed setting	–												90%	80%	70%	60%	55%	45%	40%	35%	35%	30%	25%	20%	20%

Controller EP-01 ▶ 138

ABAS12 Bending type (R/L)

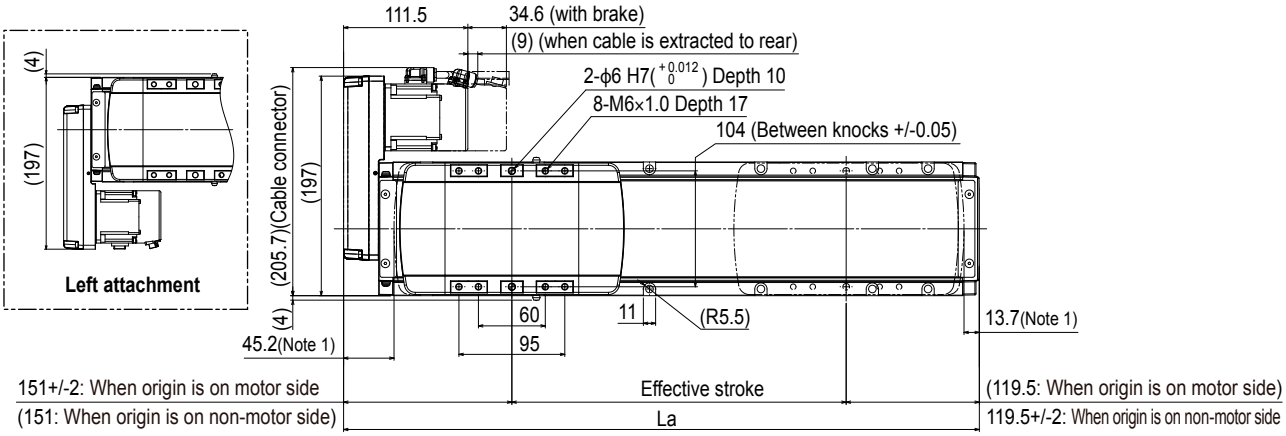

Right attachment

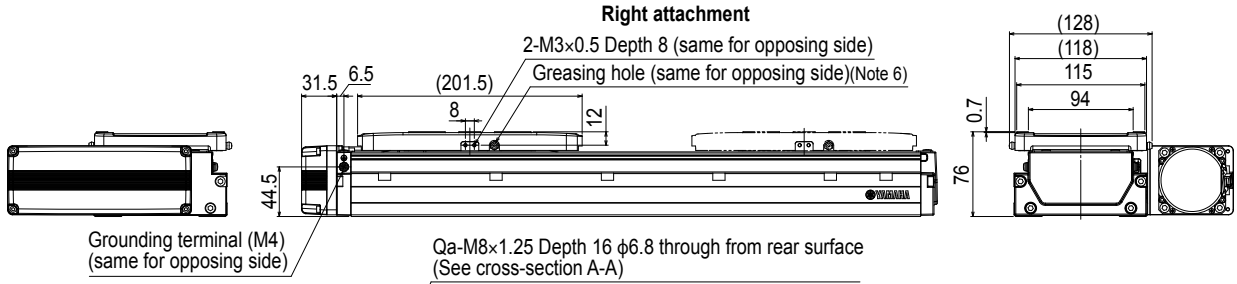

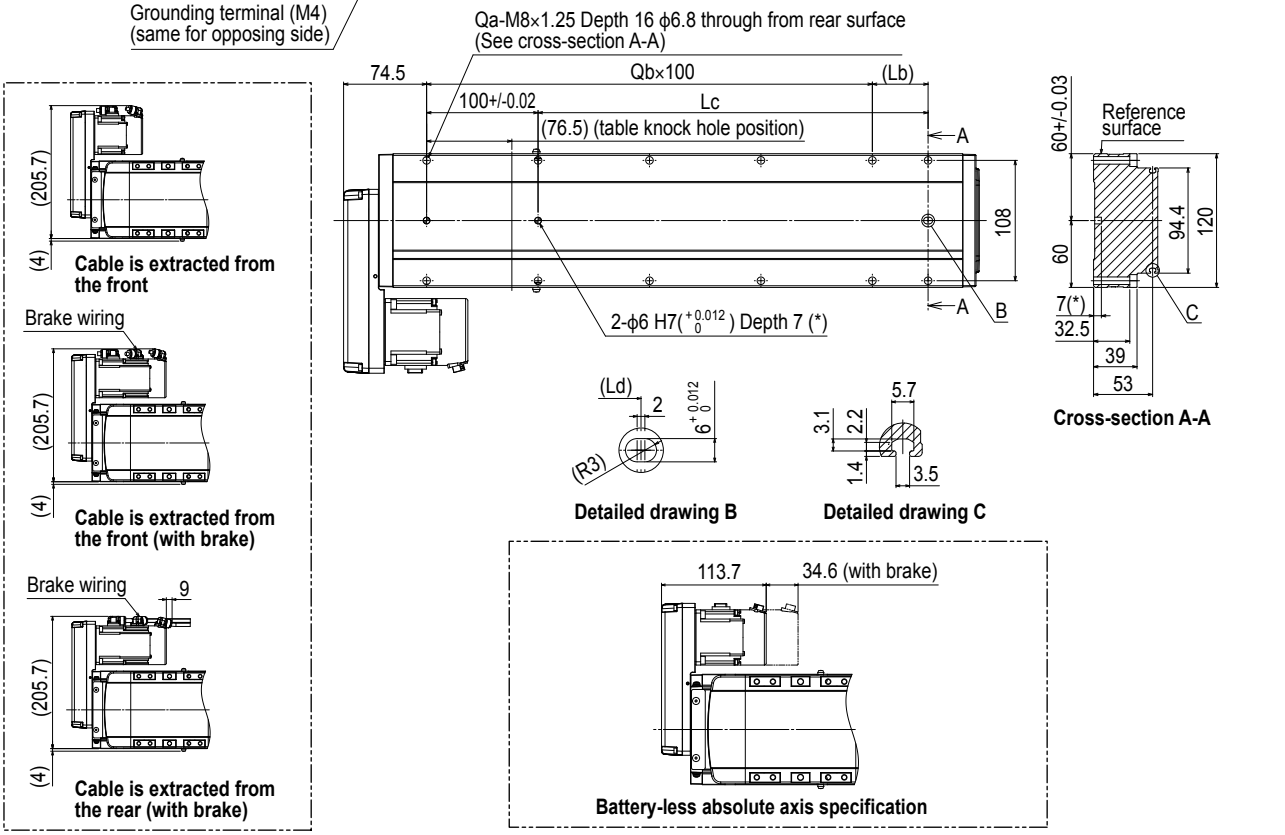

Note 1. Stop positions are determined by the mechanical stoppers at both ends.
Note 2. When changing the return-to-origin direction, the parameter needs to be changed. (The standard is that the origin is located on the motor side.)
Note 3. For the installation through hole, the length under head << 45 mm or more>> is recommended for the hex socket head bolts <M6 × 1.0>. In the installation tap hole, the length under head <<thickness of stand +16 mm or less>> is recommended for the hex socket head bolts <M8 × 1.25> used to install the main unit.
Note 4. The weight with the brake is 0.4 kg heavier than the value in the weight column.
Note 5. The minimum bending radius of the robot cable is R30 on the fixed side or R50 on the movable side. The cable extraction direction may vary depending on the specifications.
Note 6. Grease gun nozzle (recommended) (see P.135 for detail)

Effective stroke		50	100	150	200	250	300	350	400	450	500	550	600	650	700	750	800	850	900	950	1000	1050	1100	1150	1200	1250
La		320.5	370.5	420.5	470.5	520.5	570.5	620.5	670.5	720.5	770.5	820.5	870.5	920.5	970.5	1020.5	1070.5	1120.5	1170.5	1220.5	1270.5	1320.5	1370.5	1420.5	1470.5	1520.5
Lb		100	50	100	50	100	50	100	50	100	50	100	50	100	50	100	50	100	50	100	50	100	50	100	50	100
Lc		100	150	200	250	300	350	400	450	500	550	600	650	700	750	800	850	900	950	1000	1050	1100	1150	1200	1250	1300
Qa		6	8	8	10	10	12	12	14	14	16	16	18	18	20	20	22	22	24	24	26	26	28	28	30	30
Qb		1	2	2	3	3	4	4	5	5	6	6	7	7	8	8	9	9	10	10	11	11	12	12	13	13
Weight (kg) Note 4		5.3	5.7	6.1	6.5	6.9	7.3	7.7	8.1	8.5	9	9.4	9.9	10.3	10.7	11.2	11.6	12	12.5	12.9	13.4	13.8	14.2	14.7	15.1	15.6
Maximum speed (mm/sec)	Lead 32	1800												1620	1440	1260	1080	990	810	720	630	630	540	450	360	360
	Lead 20	1200												1080	960	840	720	660	540	480	420	420	360	300	240	240
	Lead 10	600												540	480	420	360	330	270	240	210	210	180	150	120	120
	Lead 5	300												270	240	210	180	165	135	120	105	105	90	75	60	60
	Speed setting	–												90%	80%	70%	60%	55%	45%	40%	35%	35%	30%	25%	20%	20%

Controller EP-01 ▶ 138

ABAS12H Straight type (S)

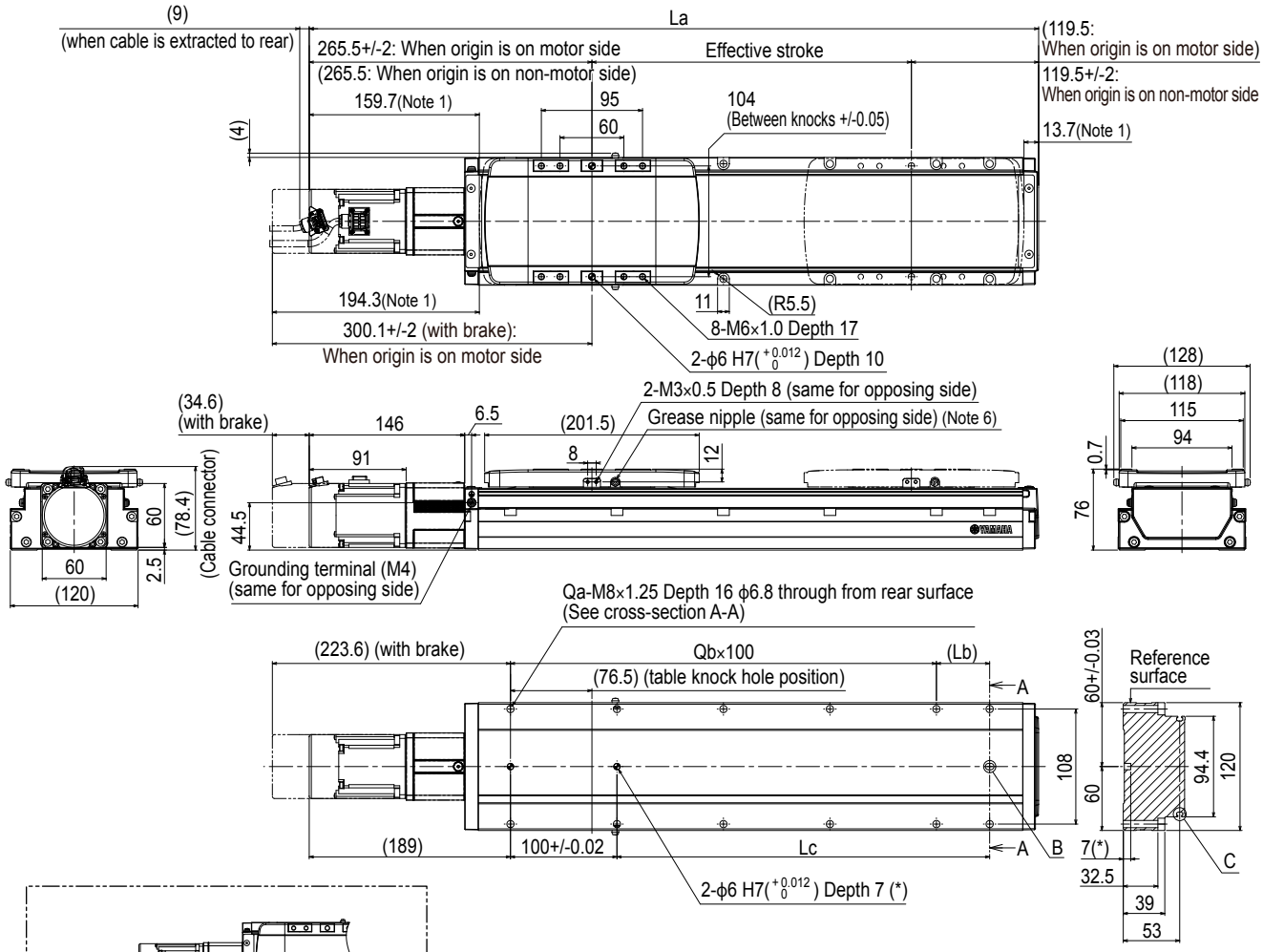

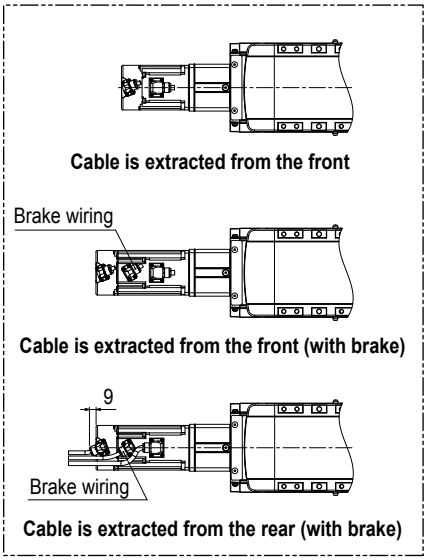

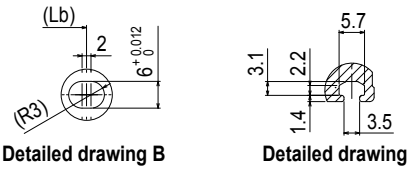

Detailed drawing B

Detailed drawing C

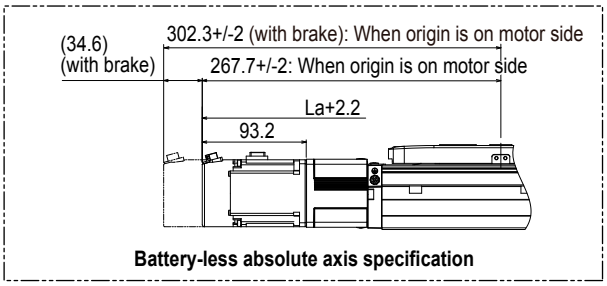

Battery-less absolute axis specification

Note 1. Stop positions are determined by the mechanical stoppers at both ends.
Note 2. When changing the return-to-origin direction, the parameter needs to be changed. (The standard is that the origin is located on the motor side.)
Note 3. For the installation through hole, the length under head << 45 mm or more>> is recommended for the hex socket head bolts <M6 × 1.0>. In the installation tap hole, the length under head <<thickness of stand +16 mm or less>> is recommended for the hex socket head bolts <M8 × 1.25> used to install the main unit.
Note 4. The weight with the brake is 0.4 kg heavier than the value in the weight column.
Note 5. The minimum bending radius of the robot cable is R30 on the fixed side or R50 on the movable side. The cable extraction direction may vary depending on the specifications.
Note 6. Grease gun nozzle (recommended) (see P.135 for detail)

Effective stroke		50	100	150	200	250	300	350	400	450	500	550	600	650	700	750	800	850	900	950	1000	1050	1100	1150	1200	1250
La		435	485	535	585	635	685	735	785	835	885	935	985	1035	1085	1135	1185	1235	1285	1335	1385	1435	1485	1535	1585	1635
Lb		100	50	100	50	100	50	100	50	100	50	100	50	100	50	100	50	100	50	100	50	100	50	100	50	100
Lc		100	150	200	250	300	350	400	450	500	550	600	650	700	750	800	850	900	950	1000	1050	1100	1150	1200	1250	1300
Qa		6	8	8	10	10	12	12	14	14	16	16	18	18	20	20	22	22	24	24	26	26	28	28	30	30
Qb		1	2	2	3	3	4	4	5	5	6	6	7	7	8	8	9	9	10	10	11	11	12	12	13	13
Weight (kg) Note 4		5.6	6	6.4	6.8	7.2	7.6	8	8.4	8.8	9.2	9.7	10.1	10.5	11	11.4	11.8	12.3	12.7	13.2	13.6	14	14.5	14.9	15.4	15.8
Maximum speed (mm/sec)	Lead 32	1800												1620	1440	1260	1080	990	810	720	630	630	540	450	360	360
	Lead 20	1200												1080	960	840	720	660	540	480	420	420	360	300	240	240
	Lead 10	600												540	480	420	360	330	270	240	210	210	180	150	120	120
	Lead 5	300												270	240	210	180	165	135	120	105	105	90	75	60	60
	Speed setting	–												90%	80%	70%	60%	55%	45%	40%	35%	35%	30%	25%	20%	20%

Controller EP-01 ▶ 138

ABAS12H Bending type (R/L)

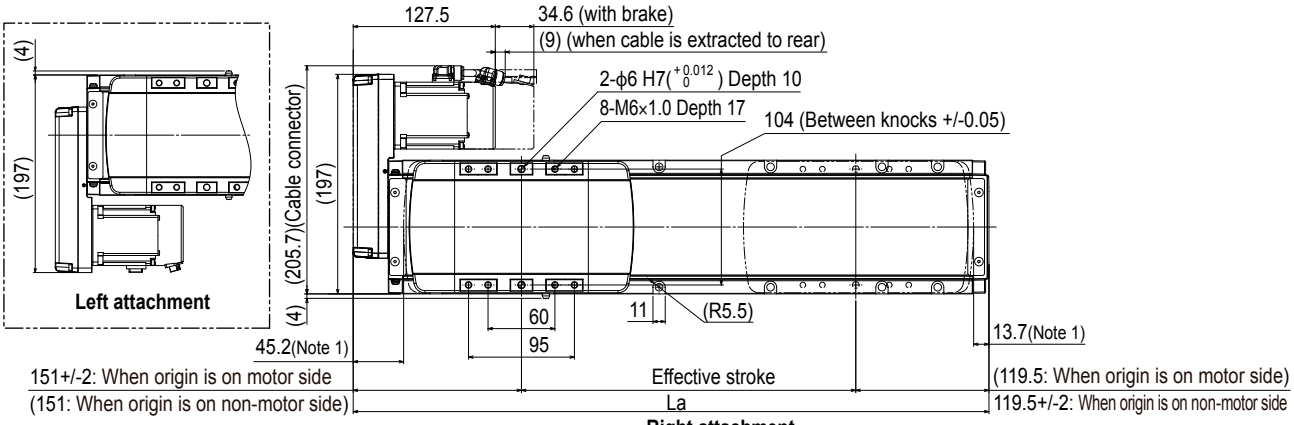

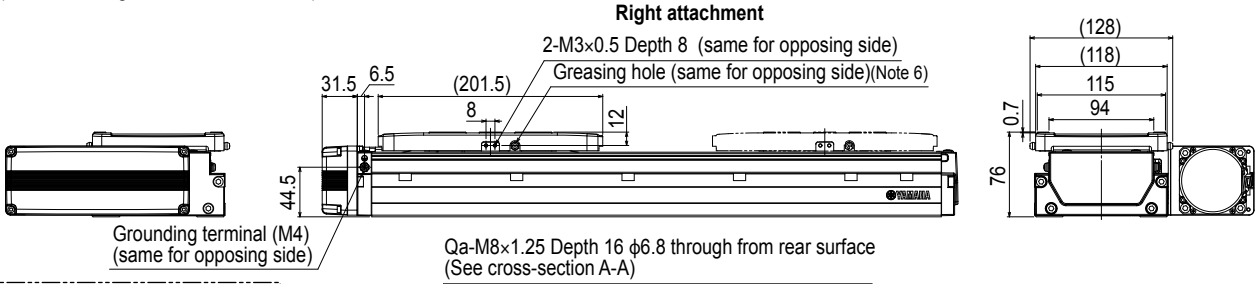

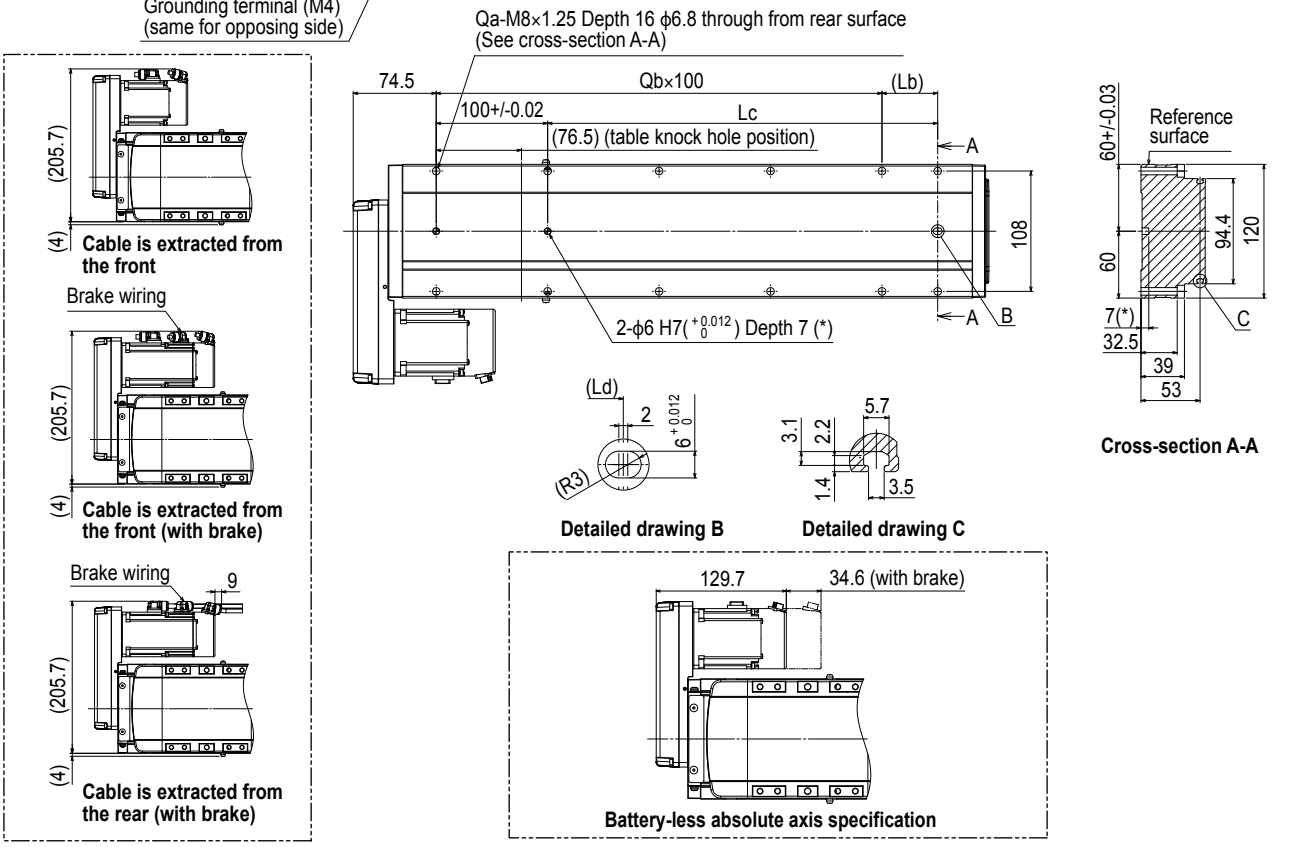

Note 1. Stop positions are determined by the mechanical stoppers at both ends.
Note 2. When changing the return-to-origin direction, the parameter needs to be changed. (The standard is that the origin is located on the motor side.)
Note 3. For the installation through hole, the length under head << 45 mm or more>> is recommended for the hex socket head bolts <M6 × 1.0>. In the installation tap hole, the length under head <<thickness of stand +16 mm or less>> is recommended for the hex socket head bolts <M8 × 1.25> used to install the main unit.
Note 4. The weight with the brake is 0.4 kg heavier than the value in the weight column.
Note 5. The minimum bending radius of the robot cable is R30 on the fixed side or R50 on the movable side. The cable extraction direction may vary depending on the specifications.
Note 6. Grease gun nozzle (recommended) (see P.135 for detail)

Effective stroke		50	100	150	200	250	300	350	400	450	500	550	600	650	700	750	800	850	900	950	1000	1050	1100	1150	1200	1250
La		320.5	370.5	420.5	470.5	520.5	570.5	620.5	670.5	720.5	770.5	820.5	870.5	920.5	970.5	1020.5	1070.5	1120.5	1170.5	1220.5	1270.5	1320.5	1370.5	1420.5	1470.5	1520.5
Lb		100	50	100	50	100	50	100	50	100	50	100	50	100	50	100	50	100	50	100	50	100	50	100	50	100
Lc		100	150	200	250	300	350	400	450	500	550	600	650	700	750	800	850	900	950	1000	1050	1100	1150	1200	1250	1300
Qa		6	8	8	10	10	12	12	14	14	16	16	18	18	20	20	22	22	24	24	26	26	28	28	30	30
Qb		1	2	2	3	3	4	4	5	5	6	6	7	7	8	8	9	9	10	10	11	11	12	12	13	13
Weight (kg) Note 4		5.6	6	6.4	6.8	7.2	7.6	8	8.4	8.8	9.3	9.7	10.2	10.6	11	11.5	11.9	12.3	12.8	13.2	13.7	14.1	14.5	15	15.4	15.9
Maximum speed (mm/sec)	Lead 32	1800												1620	1440	1260	1080	990	810	720	630	630	540	450	360	360
	Lead 20	1200												1080	960	840	720	660	540	480	420	420	360	300	240	240
	Lead 10	600												540	480	420	360	330	270	240	210	210	180	150	120	120
	Lead 5	300												270	240	210	180	165	135	120	105	105	90	75	60	60
	Speed setting	–												90%	80%	70%	60%	55%	45%	40%	35%	35%	30%	25%	20%	20%

Controller EP-01 ▶ 138