GX16

Single-axis AC servo motor robot

Ordering method

GX16 - [ ] [ ] **EU** - [ ] - [ ] [ ] - **A30** [ ] [ ]

Model	Lead	Motor specification	Motor type Note1	Stroke	Cable length Note2	Cable entry location	Driver	Brake unit Note3	Absolute battery
	40: 40mm 20: 20mm 10: 10mm	S80: Standard / With no brake BK80: Standard / With brake BL80: Battery-less absolute / With no brake BKBL80: Battery-less absolute / With brake		100 to 1450 (50mm pitch)	R3: 3m R5: 5m R10: 10m	R: From rear of motor F: From front of motor	A30:YHX-A30-SET	V: With brake unit N: None	B: With absolute battery N: None

Note 1. RoHS2 (EU) 2015/863 compliant motor
Note 2. All robot cables are flexible cables. The robot cable dimensions drawing is provided on page 733.
Note 3. The brake unit cannot be used with an external brake power input.

Specifications

Motor		80 □ / 750 W		
Repeatability Note 1		+/-0.005 mm		
Deceleration mechanism		Ground ball screw ϕ20 (Class C5)		
Stroke		100 mm to 1450 mm (50mm pitch)		
Maximum speed Note 2		2400 mm/sec	1200 mm/sec	600 mm/sec
Ball screw lead		40 mm	20 mm	10 mm
Maximum payload	Horizontal	45 kg	95 kg	130 kg
	Vertical	12 kg	28 kg	55 kg
Rated thrust		320 N	640 N	1280 N
Maximum dimensions of cross section of main unit		W 160 mm × H 130 mm		
Overall length (Horizontal)		ST + 339.5 mm		
Overall length (Vertical)		ST + 386.5 mm		
Degree of cleanliness Note 3		ISO CLASS 3 (ISO14644-1) or equivalent		
Intake air Note 4		30 Nℓ/min to 90 Nℓ/min		
Controller		YHX series		

Note 1. Positioning repeatability in one direction.
Note 2. The maximum speed may not be reached if the travel distance is short or because of other operation conditions.
If the effective stroke exceeds 800 mm, the ball screw may resonate. (Critical speed)
At this time, make the adjustment to decrease the speed while referring to the maximum speed shown in the table.
Note 3. When using in a clean environment, attach a suction air joint. The degree of cleanness is the cleanliness when using at 1000 mm/sec or less.
Note 4. The required suction amount will vary according to the operating conditions and operating environment.

Static loading moment

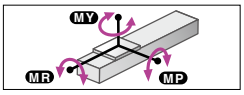

(Unit: N·m)

MY	MP	MR
706	706	620

Allowable overhang Note

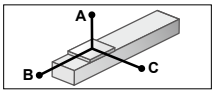

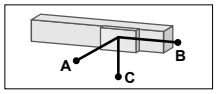

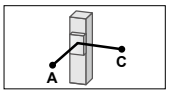

GX16-40

Horizontal installation (Unit: mm)

	A	B	C
15kg	2876	1866	1253
30kg	2385	997	776
45kg	2339	720	604

Wall installation (Unit: mm)

	A	B	C
15kg	1273	1802	2797
30kg	782	935	2263
45kg	598	658	2174

Vertical installation (Unit: mm)

	A	C
3kg	6605	6605
6kg	3699	3699
12kg	2827	2827

GX16-20

Horizontal installation (Unit: mm)

	A	B	C
30kg	3862	1255	1106
50kg	2568	733	652
80kg	1798	440	394
95kg	1579	362	325

Wall installation (Unit: mm)

	A	B	C
30kg	1102	1192	3742
50kg	630	671	2422
80kg	360	377	1612
95kg	288	300	1373

Vertical installation (Unit: mm)

	A	C
10kg	3404	3404
20kg	1740	1740
28kg	1504	1504

GX16-10

Horizontal installation (Unit: mm)

	A	B	C
50kg	6253	1026	1024
80kg	4447	623	624
100kg	3957	489	490
130kg	3786	365	367

Wall installation (Unit: mm)

	A	B	C
50kg	980	964	6089
80kg	573	561	4240
100kg	437	426	3706
130kg	312	302	3422

Vertical installation (Unit: mm)

	A	C
15kg	3434	3434
30kg	1684	1684
55kg	889	889

Note. Distance from center of slider upper surface to carrier center-of-gravity at a guide service life of 10,000 km.
Note. Service life is calculated for 600mm stroke models.

Robot cable

R3R (3 m/extracted to rear)	
Encoder cable + Power cable set model	KEX-M4710-30
R5R (5 m/extracted to rear)	
Encoder cable + Power cable set model	KEX-M4710-50
R10R (10 m/extracted to rear)	
Encoder cable + Power cable set model	KEX-M4710-A0
R3F (3 m/extracted to front)	
Encoder cable + Power cable set model	KEX-M4720-30
R5F (5 m/extracted to front)	
Encoder cable + Power cable set model	KEX-M4720-50
R10F (10 m/extracted to front)	
Encoder cable + Power cable set model	KEX-M4720-A0

Driver unit

30A Spec.	Model	YHX-A30-SET
	Control method	Standard profile

GX16

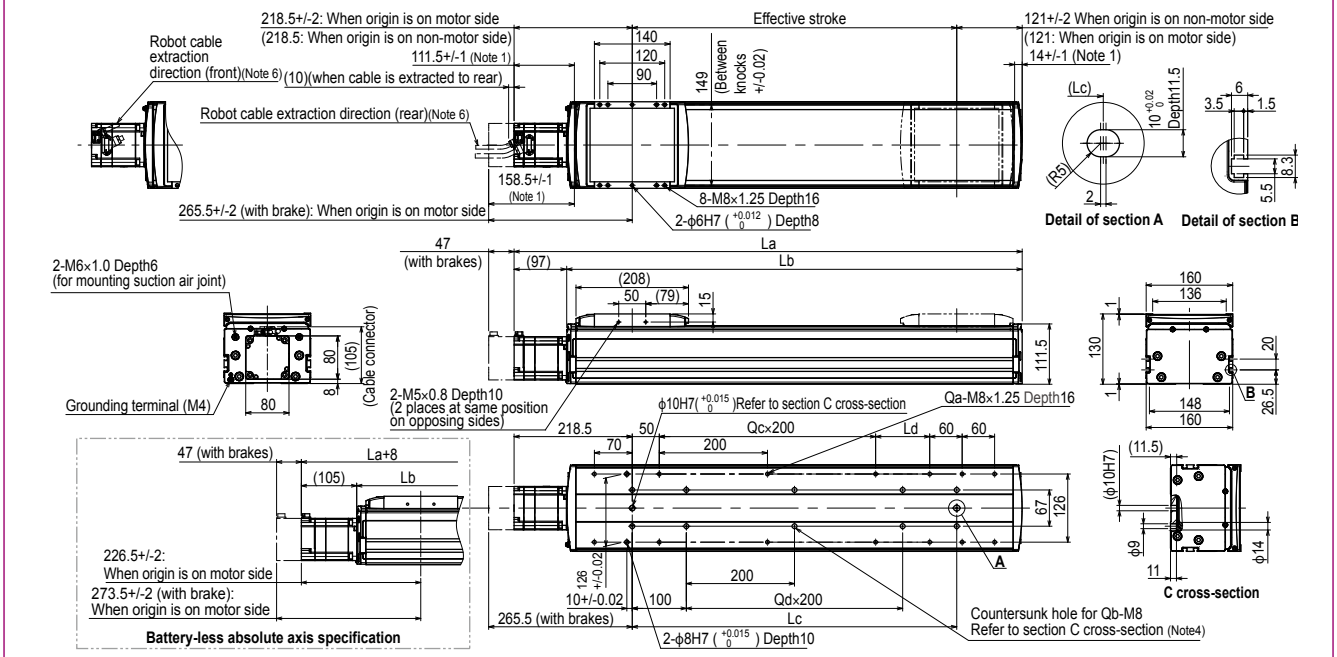

Note 1. Stop positions are determined by the mechanical stoppers at both ends.
Note 2. Adjustments are required when changing the return-to-origin direction. (The standard origin is on the motor side.)
Note 3. The length under head of the hex socket head bolts <M8 x 1.25> used to mount the body with the mounting countersunk holes (section C cross-section) must be <<25mm or more>>. The recommended length under head of the hex socket head bolts <M8 x 1.25> used to mount the body with the mounting tap hole specifications is <<frame thickness + 15 mm or less>>.
Note 4. When using the mounting countersunk holes (section C cross-section) to mount the body, remove the seal, and then fix.
Note 5. This is the weight without brakes. When brakes are mounted, the weight will be 1.1 kg heavier than the body weight given in the table.
Note 6. The specifications of the robot cable will vary according to the extraction direction.
Note 7. When secured in place, the minimum bending radius of the robot cable is R30.

Effective stroke	100	150	200	250	300	350	400	450	500	550	600	650	700	750	800	850	900	950	1000	1050	1100	1150	1200	1250	1300	1350	1400	1450
La	439.5	489.5	539.5	589.5	639.5	689.5	739.5	789.5	839.5	889.5	939.5	989.5	1039.5	1089.5	1139.5	1189.5	1239.5	1289.5	1339.5	1389.5	1439.5	1489.5	1539.5	1589.5	1639.5	1689.5	1739.5	1789.5
Lb	342.5	392.5	442.5	492.5	542.5	592.5	642.5	692.5	742.5	792.5	842.5	892.5	942.5	992.5	1042.5	1092.5	1142.5	1192.5	1242.5	1292.5	1342.5	1392.5	1442.5	1492.5	1542.5	1592.5	1642.5	1692.5
Lc	100	150	200	250	300	350	400	450	500	550	600	650	700	750	800	850	900	950	1000	1050	1100	1150	1200	1250	1300	1350	1400	1450
Ld	0	50	100	150	200	50	100	150	200	50	100	150	200	50	100	150	200	50	100	150	200	50	100	150	200	50	100	150
Qa	8	10	10	10	10	12	12	12	12	14	14	14	14	16	16	16	16	18	18	18	18	20	20	20	20	22	22	22
Qb	4	6	6	6	6	8	8	8	8	10	10	10	10	12	12	12	12	14	14	14	14	16	16	16	16	18	18	18
Qc	0	0	0	0	0	1	1	1	1	2	2	2	2	3	3	3	3	4	4	4	4	5	5	5	5	6	6	6
Qd	0	0	0	0	0	1	1	1	1	2	2	2	2	3	3	3	3	4	4	4	4	5	5	5	5	6	6	6
Weight (kg) Note 5	13.9	14.9	15.9	16.9	17.9	18.8	19.8	20.8	21.8	22.8	23.7	24.7	25.7	26.7	27.7	28.7	29.6	30.6	31.6	32.6	33.6	34.6	35.5	36.5	37.5	38.5	39.5	40.4
Maximum speed (mm/sec) **Lead 40**	2400															2160	1920	1680	1440	1320	1200	1080	960		840	720		600
Lead 20	1200															1080	960	840	720	660	600	540	480		420	360		300
Lead 10	600															540	480	420	360	330	300	270	240		210	180		150
Speed setting	-															90%	80%	70%	60%	55%	50%	45%	40%		35%	30%		25%