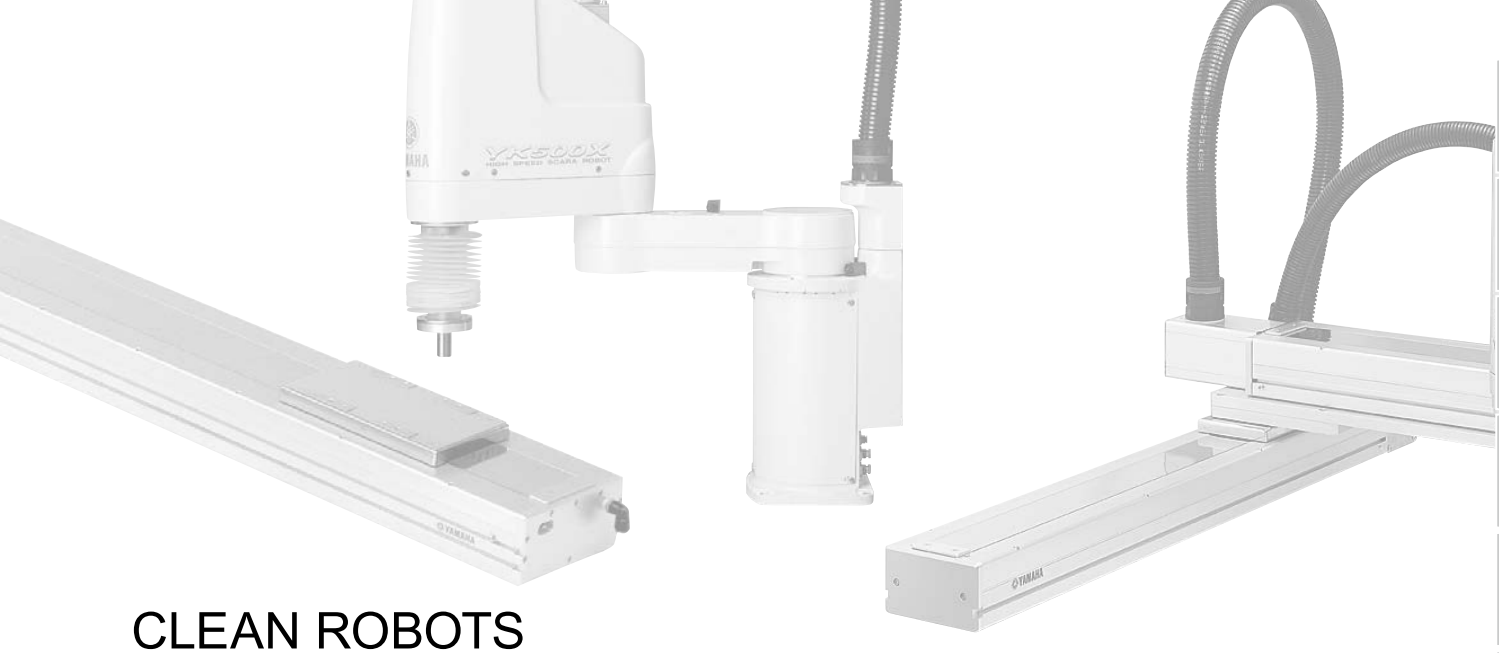

CLEAN ROBOTS

CLEAN TYPE

CONTENTS

■ CLEAN ROBOTS SPECIFICATION SHEET……514

SINGLE-AXIS

● TRANSERVO

SSC04 ……517
SSC05 ……518
SSC05H ……519

● FLIP-XC

C4L ……520
C4LH ……521
C5L ……522
C5LH ……523
C6L ……524
C8 ……525
C8L ……526
C8LH ……527
C10 ……528
C14 ……529
C14H ……530
C17 ……531
C17L ……532
C20 ……533

CARTESIAN XY-XC

● 2 axes

SXYxC ……534

● 3 axes / ZSC

SXYxC ……536

● 4 axes / ZRSC

SXYxC ……538

SCARA YK-XC

YK180XC ……540
YK220XC ……541
YK250XGC ……542
YK350XGC ……544
YK400XGC ……546
YK400XEC-4 ……548
YK500XGLC ……549
YK500XC ……551
YK510XEC-10 ……552
YK600XGLC ……553
YK600XC ……555
YK610XEC-10 ……556
YK700XC ……557
YK710XEC-10 ……558
YK800XC ……559
YK1000XC ……560

CLEAN ROBOTS SPECIFICATION SHEET

Clean single-axis robots

●TRANSERVO

- Degree of cleanliness Equivalent to ISO CLASS 3 (ISO14644-1)
- Intake air 15 to 80Nℓ/min

Model	Lead (mm)	Payload (kg)		Stroke (mm) and maximum speed (mm/sec)																Detailed info page
		Horizontal	Vertical	50	100	150	200	250	300	350	400	450	500	550	600	650	700	750	800	
SSC04	12	2	1	600																P.517
	6	4	2	300																
	2	6	4	100																
SSC05	20	4	–	1000												933	833	733	633	P.518
	12	6	1	600												560	500	440	380	
	6	10	2	300												280	250	220	190	
SSC05H	20	6	–	1000												933	833	733	633	P.519
	12	8	–	600												560	500	440	380	
		–	2	500														440	380	
	6	12	–	300												280	250	220	190	
		–	4	250														220	190	

●FLIP-XC

- Degree of cleanliness Equivalent to ISO CLASS 3 (ISO14644-1)
- Intake air 20 to 90Nℓ/min

Model	AC servo motor output (W)	Repeatability (mm)	Lead (mm)	Payload (kg)		Stroke (mm) and maximum speed (mm/sec)																			
				Horizontal	Vertical	50	100	150	200	250	300	350	400	450	500	550	600	650	700	750	800	850	900	950	
C4L / C4LH	30	+/-0.02	12	4.5	1.2	720																			
			6	6	2.4	360																			
			2	6	7.2	120																			
C5L / C5LH	30	+/-0.02	20	3	–	1000																			
			12	5	1.2	800																			
			6	9	2.4	400																			
C6L	60	+/-0.02	20	10	–	1000																			
			12	12	4	800																			
			6	30	8	400																			
C8	100	+/-0.02	20	12	–			1000										900	800	700	650				
			12	20	4			720									648	540	468	432	360				
			6	40	8			360									324	270	234	216	180				
C8L	100	+/-0.01	20	20	4			1000												900	800	700	650	600	
			10	40	8			600											510	450	390	360	330	300	
			5	50	16			300											255	225	195	180	165	150	
C8LH	100	+/-0.01	20	30	–			1000											900	800	700	650	600	550	
			10	60	–			600										510	450	390	360	330	300	270	
			5	80	–			300										255	225	195	180	165	150	135	
C10	100	+/-0.01	20	20	4			1000												950		750		600	
			10	40	10			500												475		375		300	
			5	60	20			250												237		187		150	
C14	100	+/-0.01	20	30	4			1000												950		750		600	
			10	55	10			500												475		375		300	
			5	80	20			250												237		187		150	
C14H	200	+/-0.01	20	40	8			1000												950		750		600	
			10	80	20			500												475		375		300	
			5	100	30			250												237		187		150	
C17	400	+/-0.01	20	80	15					1000														800	
			10	120	35					500														400	
C17L	600	+/-0.02	50	50	10																				
C20	600	+/-0.01	20	120	25					1000														800	
			10	–	45					500														400	

1000	1050	1100	1150	1200	1250	1300	1350	1400	1450	1500	1550	1600	1650	1700	1750	1800	1850	1900	1950	2000	2050	Detailed info page
																						C4L : P.520 C4LH : P.521
																						C5L : P.522 C5LH : P.523
																						P.524
																						P.525
550	500																					P.526
270	240																					
135	120																					
500	450																					P.527
240	210																					
120	105																					
600	500																					P.528
300	250																					
150	125																					
600	500																					P.529
300	250																					
150	125																					
600	500																					P.530
300	250																					
150	125																					
800	700		600		500																	P.531
400	350		300		250																	
			1000		1000		1000		1000		1000		1000		1000		900		800		800	P.532
800	700		600		500																	P.533
400	350		300		250																	

Clean cartesian robots

● XY-XC

- Degree of cleanliness Equivalent to ISO CLASS 3 (ISO14644-1)
- Intake air 60 to 90Nℓ/min
- Aperture designed to minimal dimensions by use of stainless steel sheet
- Installed clean robot dedicated cable duct

Note : User cable D-Sub 25 pin connector
: 24 conductors, 0.3 sq
(No. 1 through 24 are already connected and No.25 is for grounding)
Note : User tube three ϕ6 air tubes

Arm variations

Special model for clean rooms with moving Y-axis carriage installed upward.

T1

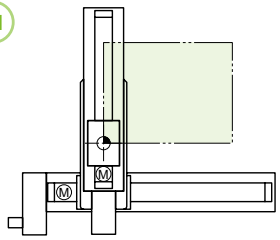

T3

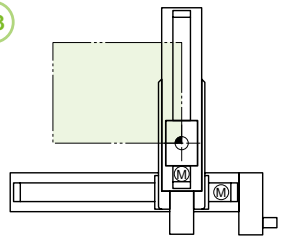

Type	Model	Axis	Moving range	Maximun speed (mm/sec)	Maximum payload (kg)	Detailed info page
2 axes	SXYXC	X	150 to 1050mm	1000	20	P.534
		Y	150 to 650mm	1000		
3 axes	SXYXC (ZSC12)	X	150 to 1050mm	1000	3	P.536
		Y	150 to 650mm	1000		
		Z	150mm	1000		
	SXYXC (ZSC6)	X	150 to 1050mm	1000	5	P.536
		Y	150 to 650mm	1000		
		Z	150mm	500		
4 axes	SXYXC (ZRSC12)	X	150 to 1050mm	1000	3	P.538
		Y	150 to 650mm	1000		
		Z	150mm	1000		
		R	360°	1020°/sec		
	SXYXC (ZRSC6)	X	150 to 1050mm	1000	5	P.538
		Y	150 to 650mm	1000		
		Z	150mm	500		
		R	360°	1020°/sec		

Clean SCARA robots

● YK-XC/YK-XGC/YK-XGLC/YK-XEC

- Degree of cleanliness
  YK-XC/YK-XGC/YK-XGLC ...ISO CLASS 3 (ISO14644-1)
  YK-XEC .....ISO CLASS 4 (ISO14644-1)
- Intake air 30 to 60Nℓ/min
- Harness placed completely on inside

- Bellows cover fitted in axial tip

Passed 20 million stroke durability test

Type	Model	Arm length (mm) and XY axis combined maximum speed (m/s)															Standard cycle time (sec)	Maximum payload (kg)	R axis tolerable moment of inertia (kgm²)	Detailed info page
		120	150	180	220	250	300	350	400	500	600	700	800	900	1000	1200				
Extra small type	YK180XC	3.3m/s															0.42	1.0	0.01	P.540
	YK220XC	3.4m/s															0.45	1.0	0.01	P.541
Small type	YK250XGC	4.5m/s															0.50	4.0	0.05	P.542
	YK350XGC	5.6m/s															0.52	4.0	0.05	P.544
	YK400XGC	6.1m/s															0.50	4.0	0.05	P.546
	YK400XEC-4	6.0m/s															0.45	4.0	0.05	P.548
Medium type	YK500XGLC	5.1m/s															0.66	4.0	0.05	P.549
	YK500XC	4.9m/s															0.53	10.0	0.12	P.551
	YK510XEC-10	7.8m/s															0.42	10.0	0.42	P.552
	YK600XGLC	4.9m/s															0.71	4.0	0.05	P.553
	YK600XC	5.6m/s															0.56	10.0	0.12	P.555
	YK610XEC-10	8.6m/s															0.44	10.0	0.30	P.556
Large type	YK700XC	6.7m/s															0.57	20.0	0.32	P.557
	YK710XEC-10	9.5m/s															0.49	10.0	0.30	P.558
	YK800XC	7.3m/s															0.57	20.0	0.32	P.559
	YK1000XC	8.0m/s															0.60	20.0	0.32	P.560

SSC04 Slider type

● CE compliance ● Origin on the non-motor side is selectable

Ordering method

SSC04 - [ ] - **S** - [ ] - [ ] - [ ] - [ ] - [ ] - [ ] - **S2** [ ]

Model	Lead	Type	Brake	Direction of air coupler installation	Origin position	Stroke	Cable length Note 2
	12: 12mm 6: 6mm 2: 2mm	S: Straight	N: With no brake B: With brake	RJ: Right (Standard) LJ: Left	N: Standard Note 1 Z: Non-motor side	50 to 400 (50mm pitch)	1L: 1m 3L: 3m 5L: 5m 10L: 10m

Robot positioner	I/O
S2: TS-S2 Note 3	NP: NPN PN: PNP CC: CC-Link DN: DeviceNet™ EP: EtherNet/IP™ PT: PROFINET GW: No I/O board Note 4

SH [ ] - [ ]

Robot positioner	I/O	Battery
SH: TS-SH	NP: NPN PN: PNP CC: CC-Link DN: DeviceNet™ EP: EtherNet/IP™ PT: PROFINET GW: No I/O board Note 4	B: With battery (Absolute) N: None (Incremental)

SD **1**

Robot driver	I/O cable
SD: TS-SD	1: 1m

Note 1. If changing from the origin position at the time of purchase, the machine reference amount must be reset. For details, refer to the manual.
Note 2. The robot cable is flexible and resists bending.
Note 3. See P.600 for DIN rail mounting bracket.
Note 4. Select this selection when using the gateway function.

Basic specifications

Motor		42 □ Step motor		
Repeatability Note 1 (mm)		+/-0.02		
Deceleration mechanism		Ball screw ϕ8		
Maximum motor torque (N·m)		0.27		
Ball screw lead (mm)		12	6	2
Maximum speed (mm/sec)		600	300	100
Maximum payload (kg)	Horizontal	2	4	6
	Vertical	1	2	4
Max. pressing force (N)		45	90	150
Stroke (mm)		50 to 400 (50mm pitch)		
Overall length (mm)	Horizontal	Stroke+216		
	Vertical	Stroke+261		
Maximum outside dimension of body cross-section (mm)		W49 × H59		
Cable length (m)		Standard: 1 / Option: 3, 5, 10		
Degree of cleanliness		CLASS 10 Note 2		
Intake air (Nℓ/min)		Lead 12	Lead 6	Lead 2
		50	30	15

Note 1. Positioning repeatability in one direction.
Note 2. Per 1cf (0.1μm base), when suction blower is used.

Allowable overhang Note

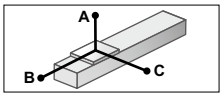

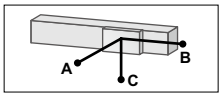

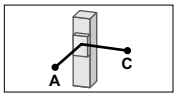

Horizontal installation (Unit: mm)

		A	B	C
Lead 12	1kg	807	218	292
	2kg	667	107	152
Lead 6	2kg	687	116	169
	3kg	556	76	112
	4kg	567	56	84
Lead 2	4kg	869	61	92
	6kg	863	40	60

Wall installation (Unit: mm)

		A	B	C
Lead 12	1kg	274	204	776
	2kg	133	93	611
Lead 6	2kg	149	102	656
	3kg	92	62	516
	4kg	63	43	507
Lead 2	4kg	72	48	829
	6kg	39	29	789

Vertical installation (Unit: mm)

		A	C
Lead 12	0.5kg	407	408
	1kg	204	204
Lead 6	1kg	223	223
	2kg	107	107
Lead 2	2kg	118	118
	4kg	53	53

Note. Distance from center of slider upper surface to conveyor center-of-gravity at a guide service life of 10,000 km (Service life is calculated for 400mm stroke models).

Static loading moment

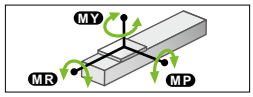

(Unit: N·m)

MY	MP	MR
16	19	17

Controller

Controller	Operation method
TS-S2 TS-SH	I/O point trace / Remote command
TS-SD	Pulse train control

SSC04

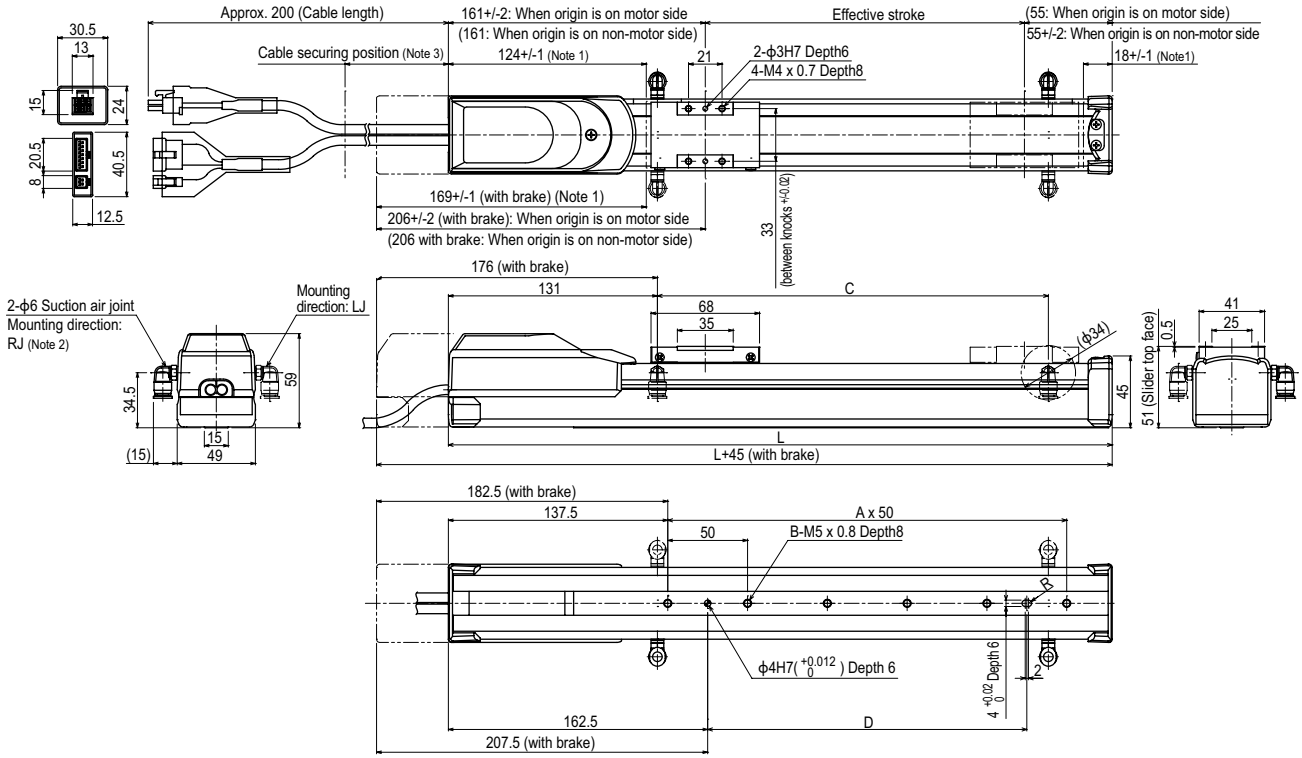

Effective stroke	50	100	150	200	250	300	350	400
L	266	316	366	416	466	516	566	616
A	2	3	4	5	6	7	8	9
B	3	4	5	6	7	8	9	10
C	50	100	150	200	250	300	350	400
Weight (kg) Note 5	1.5	1.6	1.7	1.8	2.0	2.1	2.2	2.3

Note 1. Stop positions are determined by the mechanical stoppers at both ends.
Note 2. Either right or left can be selected for the suction air joint mounting direction. This drawing shows the RJ (standard) direction.
Note 3. Secure the cable with a tie-band 100mm or less from unit's end face to prevent the cable from being subjected to excessive loads.
Note 4. The cable's minimum bend radius is R30.
Note 5. These are the weights without a brake. The weights are 0.2kg heavier when equipped with a brake.

Controller TS-S2 ▶ 592 TS-SH ▶ 592 TS-SD ▶ 602

SSC05 Slider type

- High lead: Lead 20
- CE compliance
- Origin on the non-motor side is selectable

Ordering method

SSC05 - [ ] - S - [ ] - [ ] - [ ] - [ ] - [ ]

Model	Lead	Type	Brake Note 1	Direction of air coupler installation	Origin position	Stroke	Cable length Note 3
	20: 20mm 12: 12mm 6: 6mm	S: Straight	N: With no brake B: With brake	RJ: Right (Standard) LJ: Left	N: Standard Note 2 Z: Non-motor side	50 to 800 (50mm pitch)	1L: 1m 3L: 3m 5L: 5m 10L: 10m

S2

Robot positioner	I/O
S2: TS-S2 Note 4	NP: NPN PN: PNP CC: CC-Link DN: DeviceNet™ EP: EtherNet/IP™ PT: PROFINET GW: No I/O board Note 5

SH

Robot positioner	I/O	Battery
SH: TS-SH	NP: NPN PN: PNP CC: CC-Link DN: DeviceNet™ EP: EtherNet/IP™ PT: PROFINET GW: No I/O board Note 5	B: With battery (Absolute) N: None (Incremental)

SD

Robot driver	I/O cable
SD: TS-SD	1: 1m

Note 1. Only the model with a lead of 12mm or 6mm can select specifications with brake.
Note 2. If changing from the origin position at the time of purchase, the machine reference amount must be reset. For details, refer to the manual.
Note 3. The robot cable is flexible and resists bending.
Note 4. See P.600 for DIN rail mounting bracket.
Note 5. Select this selection when using the gateway function.

Basic specifications

Motor		42 □ Step motor		
Repeatability Note 1 (mm)		+/-0.02		
Deceleration mechanism		Ball screw ϕ12		
Maximum motor torque (N·m)		0.27		
Ball screw lead (mm)		20	12	6
Maximum speed (mm/sec) Note 2		1000	600	300
Maximum payload (kg)	Horizontal	4	6	10
	Vertical	–	1	2
Max. pressing force (N)		27	45	90
Stroke (mm)		50 to 800 (50mm pitch)		
Overall length (mm)	Horizontal	Stroke+230		
	Vertical	Stroke+270		
Maximum outside dimension of body cross-section (mm)		W55 × H56		
Cable length (m)		Standard: 1 / Option: 3, 5, 10		
Degree of cleanliness		CLASS 10 Note 3		
Intake air (Nℓ/min)		Lead 20	Lead 12	Lead 6
		80	50	30

Note 1. Positioning repeatability in one direction.
Note 2. When the stroke is longer than 650mm, resonance of the ball screw may occur depending on the operation conditions (critical speed). In this case, reduce the speed setting on the program by referring to the maximum speeds shown in the table below.
Note 3. Per 1cf (0.1μm base), when suction blower is used.

Allowable overhang Note

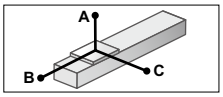

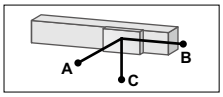

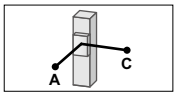

Horizontal installation (Unit: mm)

		A	B	C
Lead 20	2kg	413	139	218
	4kg	334	67	120
Lead 12	4kg	347	72	139
	6kg	335	47	95
Lead 6	4kg	503	78	165
	8kg	332	37	79
	10kg	344	29	62

Wall installation (Unit: mm)

		A	B	C
Lead 20	2kg	192	123	372
	4kg	92	51	265
Lead 12	4kg	109	57	300
	6kg	63	31	263
Lead 6	4kg	134	63	496
	6kg	76	35	377
	8kg	47	22	355

Vertical installation (Unit: mm)

		A	C
Lead 12	0.5kg	578	579
Lead 6	1kg	286	286
	1kg	312	312
	2kg	148	148

Note. Distance from center of slider upper surface to conveyor center-of-gravity at a guide service life of 10,000 km (Service life is calculated for 600mm stroke models).

Static loading moment

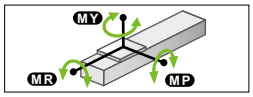

(Unit: N·m)

MY	MP	MR
25	33	30

Controller

Controller	Operation method
TS-S2 TS-SH	I/O point trace / Remote command
TS-SD	Pulse train control

SSC05

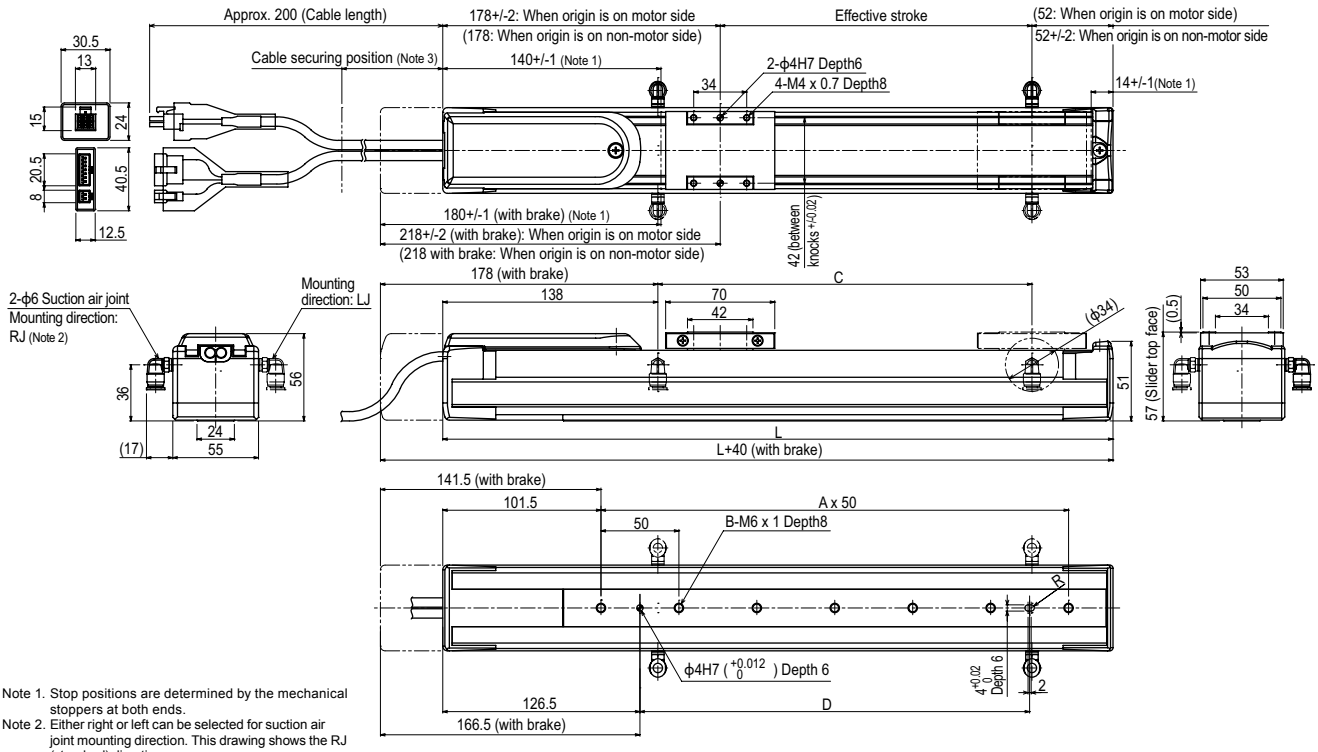

Note 1. Stop positions are determined by the mechanical stoppers at both ends.
Note 2. Either right or left can be selected for suction air joint mounting direction. This drawing shows the RJ (standard) direction.
Note 3. Secure the cable with a tie-band 100mm or less from unit's end face to prevent the cable from being subjected to excessive loads.
Note 4. The cable's minimum bend radius is R30.
Note 5. These are the weights without a brake. The weights are 0.2kg heavier when equipped with a brake.
Note 6. When the stroke is longer than 650mm, resonance of the ball screw may occur depending on the operation conditions (critical speed). In this case, reduce the speed setting on the program by referring to the maximum speeds shown in the table at the left.

Effective stroke		50	100	150	200	250	300	350	400	450	500	550	600	650	700	750	800
L		280	330	380	430	480	530	580	630	680	730	780	830	880	930	980	1030
A		3	4	5	6	7	8	9	10	11	12	13	14	15	16	17	18
B		4	5	6	7	8	9	10	11	12	13	14	15	16	17	18	19
C		100	150	200	250	300	350	400	450	500	500	500	500	500	500	500	500
Weight (kg) Note 5		2.1	2.3	2.5	2.7	2.8	3.0	3.2	3.4	3.6	3.8	4.0	4.2	4.4	4.6	4.8	5.0
Maximum speed for each stroke (mm/sec) Note 6	Lead 20	1000												933	833	733	633
	Lead 12	600												560	500	440	380
	Lead 6	300												280	250	220	190

Controller TS-S2 ▶ 592 TS-SH ▶ 592 TS-SD ▶ 602

SSC05H

Slider type

- High lead: Lead 20
- CE compliance
- Origin on the non-motor side is selectable

Ordering method

SSC05H - [ ] - **S** - [ ] - [ ] - [ ] - [ ] - [ ] - [ ] - [ ] - [ ]

Model	Lead	Type	Brake Note 1	Direction of air coupler installation	Origin position	Stroke	Cable length Note 3
	20: 20mm 12: 12mm 6: 6mm	S: Straight	N: With no brake B: With brake	RJ: Right (Standard) LJ: Left	N: Standard Note 2 Z: Non-motor side	50 to 800 (50mm pitch)	1L: 1m 3L: 3m 5L: 5m 10L: 10m

S2

Robot positioner	I/O
S2: TS-S2 Note 4	NP: NPN PN: PNP CC: CC-Link DN: DeviceNet™ EP: EtherNet/IP™ PT: PROFINET GW: No I/O board Note 5

SH

Robot positioner	I/O	Battery
SH: TS-SH	NP: NPN PN: PNP CC: CC-Link DN: DeviceNet™ EP: EtherNet/IP™ PT: PROFINET GW: No I/O board Note 5	B: With battery (Absolute) N: None (Incremental)

SD

Robot driver	I/O cable
SD: TS-SD	1: 1m

Note 1. Only the model with a lead of 12mm or 6mm can select specifications with brake.
Note 2. If changing from the origin position at the time of purchase, the machine reference amount must be reset. For details, refer to the manual.
Note 3. The robot cable is flexible and resists bending.
Note 4. See P.600 for DIN rail mounting bracket.
Note 5. Select this selection when using the gateway function.

Basic specifications

Motor		42 □ Step motor		
Repeatability Note 1 (mm)		+/-0.02		
Deceleration mechanism		Ball screw ϕ12		
Maximum motor torque (N·m)		0.47		
Ball screw lead (mm)		20	12	6
Maximum speed Note 2 (mm/sec)	**Horizontal**	1000	600	300
	Vertical	–	500	250
Maximum payload (kg)	**Horizontal**	6	8	12
	Vertical	–	2	4
Max. pressing force (N)		36	60	120
Stroke (mm)		50 to 800 (50mm pitch)		
Overall length (mm)	**Horizontal**	Stroke+286		
	Vertical	Stroke+306		
Maximum outside dimension of body cross-section (mm)		W55 × H56		
Cable length (m)		Standard: 1 / Option: 3, 5, 10		
Degree of cleanliness		CLASS 10 Note 3		
Intake air (Nℓ/min)		Lead 20	Lead 12	Lead 6
		80	50	30

Note 1. Positioning repeatability in one direction.
Note 2. When the stroke is longer than 650mm, resonance of the ball screw may occur depending on the operation conditions (critical speed). In this case, reduce the speed setting on the program by referring to the maximum speeds shown in the table below.
Note 3. Per 1cf (0.1μm base), when suction blower is used.

Allowable overhang Note

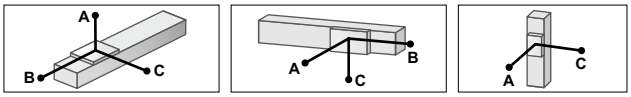

Horizontal installation (Unit: mm)

		A	B	C
Lead 20	2kg	599	225	291
	4kg	366	109	148
	6kg	352	71	104
Lead 12	4kg	500	118	179
	6kg	399	79	118
	8kg	403	56	88
Lead 6	6kg	573	83	136
	8kg	480	61	100
	10kg	442	47	78
	12kg	465	39	64

Wall installation (Unit: mm)

		A	B	C
Lead 20	2kg	262	203	554
	4kg	118	88	309
	6kg	71	49	262
Lead 12	4kg	146	96	449
	6kg	85	55	334
	8kg	55	34	305
Lead 6	6kg	101	62	519
	8kg	64	39	413
	10kg	43	26	355
	12kg	28	17	338

Vertical installation (Unit: mm)

		A	C
Lead 12	1kg	458	459
	2kg	224	224
Lead 6	2kg	244	245
	4kg	113	113

Note. Distance from center of slider upper surface to conveyor center-of-gravity at a guide service life of 10,000 km (Service life is calculated for 600mm stroke models).

Static loading moment

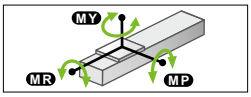

(Unit: N·m)

MY	MP	MR
32	38	34

Controller

Controller	Operation method
TS-S2 TS-SH	I/O point trace / Remote command
TS-SD	Pulse train control

SSC05H

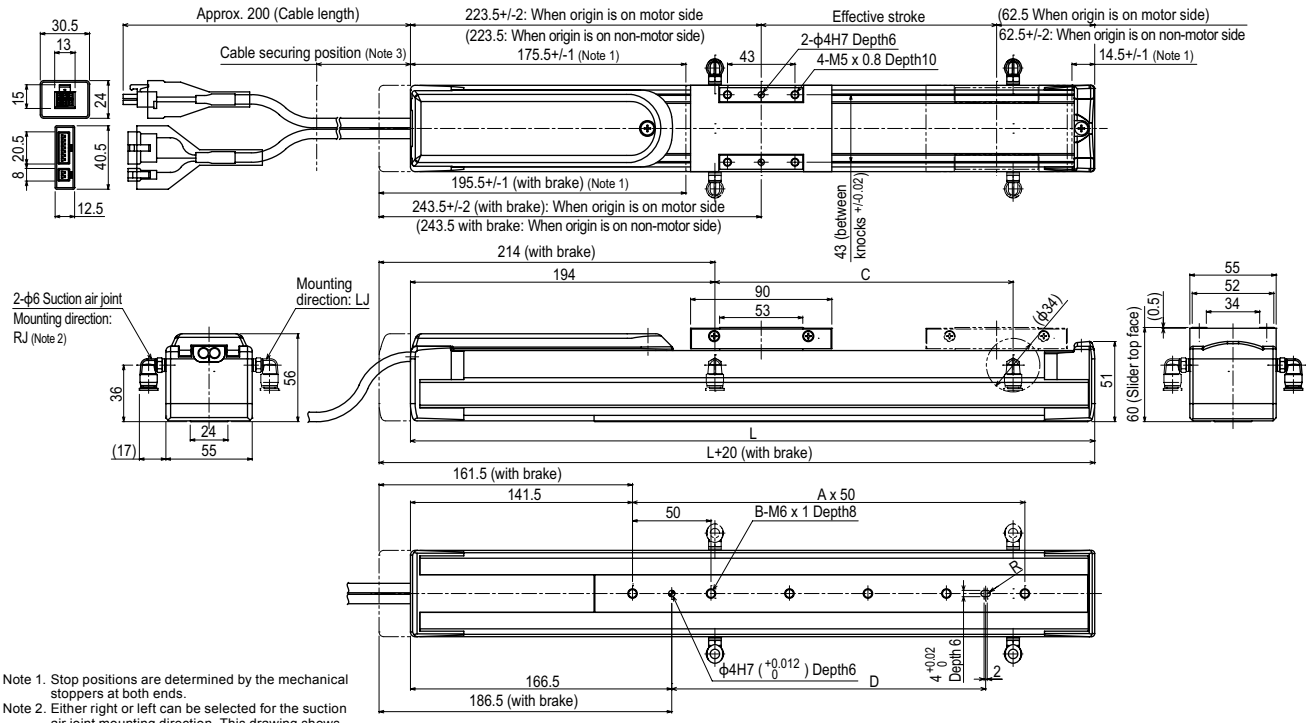

Note 1. Stop positions are determined by the mechanical stoppers at both ends.
Note 2. Either right or left can be selected for the suction air joint mounting direction. This drawing shows the RJ (standard) direction.
Note 3. Secure the cable with a tie-band 100mm or less from unit's end face to prevent the cable from being subjected to excessive loads.
Note 4. The cable's minimum bend radius is R30.
Note 5. These are the weights without a brake. The weights are 0.2kg heavier when equipped with a brake.
Note 6. When the stroke is longer than 650mm, resonance of the ball screw may occur depending on the operation conditions (critical speed). In this case, reduce the speed setting on the program by referring to the maximum speeds shown in the table at the left.

Effective stroke		50	100	150	200	250	300	350	400	450	500	550	600	650	700	750	800
L		336	386	436	486	536	586	636	686	736	786	836	886	936	986	1036	1086
A		3	4	5	6	7	8	9	10	11	12	13	14	15	16	17	18
B		4	5	6	7	8	9	10	11	12	13	14	15	16	17	18	19
C		100	150	200	250	300	350	400	450	500	500	500	500	500	500	500	500
Weight (kg) Note 5		2.4	2.6	2.8	3.0	3.2	3.4	3.6	3.8	4.0	4.2	4.4	4.5	4.7	4.9	5.1	5.3
Maximum speed for each stroke (mm/sec) Note 6	**Lead 20**	1000												933	833	733	633
	Lead 12 (Horizontal)	600												560	500	440	380
	Lead 12 (Vertical)	500														440	380
	Lead 6 (Horizontal)	300												280	250	220	190
	Lead 6 (Vertical)	250														220	190

Controller TS-S2 ▶ 592 TS-SH ▶ 592 TS-SD ▶ 602

C4L

Origin on the non-motor side is selectable

Ordering method

C4L -		-		-		-		-	ERCD -	
Model	Lead designation	Brake	Direction of air coupler installation	Origin position change	Stroke	Cable length Note 1			Controller	I/O connector specification
	12: 12mm 6: 6mm 2: 2mm	No entry: With no brake BK: With brake	LJ: Left (Standard) RJ: Right	None: Standard Z: Non-motor side	50 to 400 (50mm pitch)	1K: 1m 3K: 3.5m 5K: 5m 10K: 10m				CN1: I/O flat cable 1m (Standard) CN2: Twisted-pair cable 2m (pulse train function)

Note 1. The robot cable is flexible and resists bending. See P.692 for details on robot cable.

Basic specifications

AC servo motor output (W)		30		
Repeatability Note 1 (mm)		+/-0.02		
Deceleration mechanism		Ball screw ϕ8		
Ball screw lead (mm)		12	6	2
Maximum speed (mm/sec)		720	360	120
Maximum payload (kg)	Horizontal	4.5	6	6
	Vertical	1.2	2.4	7.2
Rated thrust (N)		32	64	153
Stroke (mm)		50 to 400 (50mm pitch)		
Overall length (mm)	Horizontal	Stroke+205		
	Vertical	Stroke+243		
Maximum outside dimension of body cross-section (mm)		W45×H55		
Cable length (m)		Standard: 3.5 / Option: 1,5, 10		
Degree of cleanliness		ISO CLASS 3 (ISO14644-1) Note 2		
Intake air (Nℓ/min) Note 3		50	30	15

Note 1. Positioning repeatability in one direction.
Note 2. When suction blower is used.
Note 3. The necessary intake amount varies depending on the use conditions and environment.

Allowable overhang Note

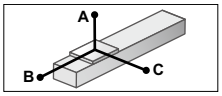

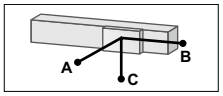

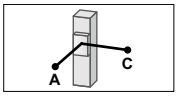

Horizontal installation (Unit: mm)

		A	B	C
Lead 12	2kg	429	87	179
Lead 6	4.5kg	219	32	74
	3kg	511	58	135
	6kg	336	26	62
Lead 2	3kg	1571	58	142
	6kg	751	27	66

Wall installation (Unit: mm)

		A	B	C
Lead 12	2kg	145	52	368
Lead 6	4.5kg	46	0	139
	3kg	103	22	370
	6kg	27	0	185
Lead 2	3kg	109	23	1150
	6kg	27	0	420

Vertical installation (Unit: mm)

		A	C
Lead 12	1.2kg	121	122
Lead 6	2.4kg	52	54
Lead 2	3kg	37	39
	7.2kg	0	0

Note. Distance from center of slider top to center of gravity of object being carried at a guide service life of 10,000 km.
Note. Service life is calculated for 300mm stroke models.

Static loading moment

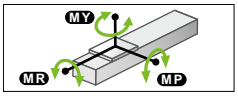

(Unit: N·m)

MY	MP	MR
15	19	18

Controller

Controller	Operation method
ERCD	Pulse train control / Programming / I/O point trace / Remote command / Operation using RS-232C communication

C4L

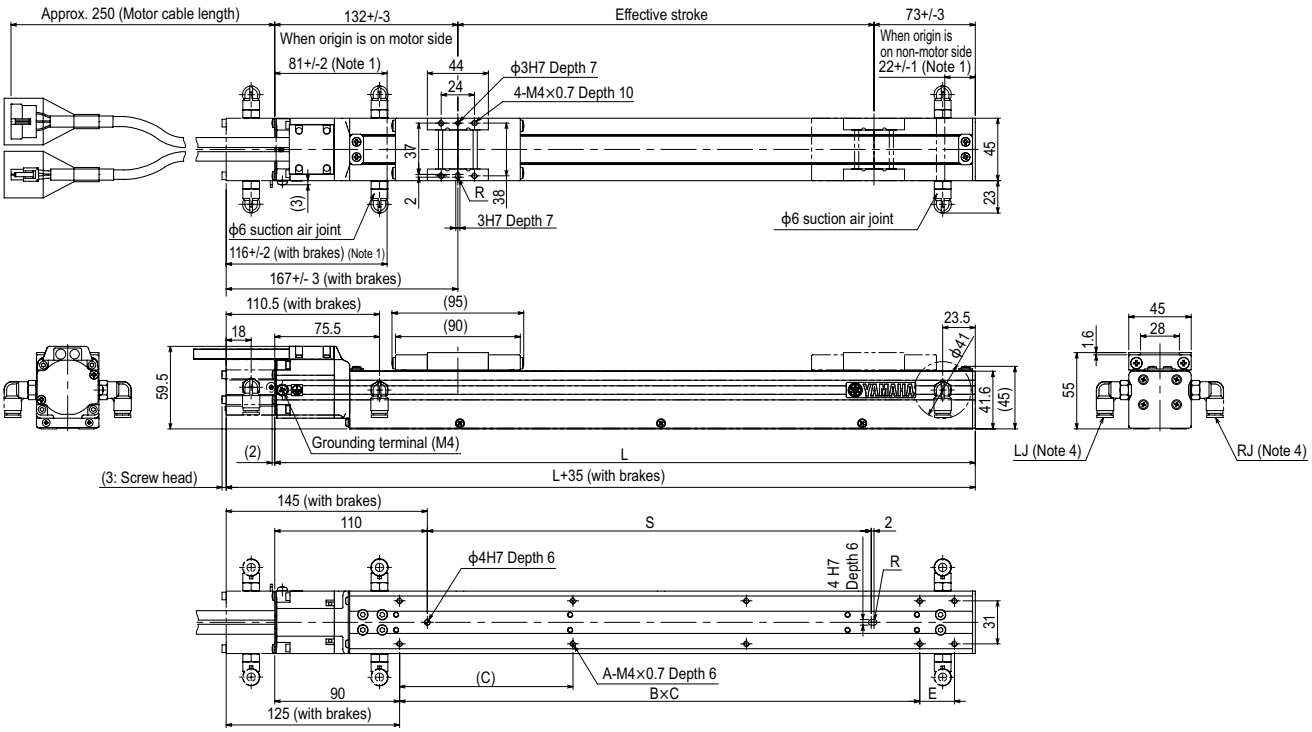

Effective stroke	50	100	150	200	250	300	350	400
L	255	305	355	405	455	505	555	605
A	4	6	6	8	8	10	10	10
B	1	2	2	2	2	3	3	4
C	150	100	125	125	125	125	125	125
E	0	0	0	50	100	25	75	0
S	70	120	170	220	270	320	370	420
Weight (kg) Note 3	1.4	1.5	1.7	1.8	2	2.1	2.3	2.4
Maximum speed for each stroke (mm/sec) Lead 12	720							
Lead 6	360							
Lead 2	120							

Note 1. Stop positions are determined by the mechanical stoppers at both ends.
Note 2. Minimum bend radius of motor cable is R30.
Note 3. Weight of models with no brake. The weight of brake-attached models is 0.2 kg heavier than the models with no brake shown in the table.
Note 4. Either right or left can be selected for the installation direction for the φ6 intake air joint. (The left side is the standard.)
Note 5. External view of C4LH is identical to C4L.

C4LH

Origin on the non-motor side is selectable

Ordering method

C4LH - [ ] - [ ] - [ ] - [ ] - [ ] - [ ] - **TSX** [ ] - [ ] - [ ] - [ ]

Model	Lead designation	Brake	Direction of air coupler installation	Origin position change	Stroke	Cable length Note 1
	12: 12mm 6: 6mm 2: 2mm	No entry: With no brake BK: With brake	LJ: Left (Standard) RJ: Right	None: Standard Z: Non-motor side	50 to 400 (50mm pitch)	3L: 3.5m 5L: 5m 10L: 10m 3K/5K/10K (Flexible cable)

TSX				
Positioner Note 2 TS-X	Driver: Power-supply voltage / Power capacity 105: 100V/100W or less 205: 200V/100W or less	LCD monitor No entry: None L: With LCD	I/O selection NP: NPN PN: PNP CC: CC-Link DN: DeviceNet™ EP: EtherNet/IP™ PT: PROFINET GW: No I/O board Note 3	Battery B: With battery (Absolute) N: None (Incremental)

SR1-X - **05** - [ ] - [ ] - [ ]

Controller	Driver: Power capacity	Usable for CE	I/O selection	Battery
	05: 100W or less	No entry: Standard E: CE marking	N: NPN P: PNP CC: CC-Link DN: DeviceNet™ PB: PROFIBUS	B: With battery (Absolute) N: None (Incremental)

RDV-X - **2** - **05**

Driver	Power-supply voltage	Driver: Power capacity
	2: AC200V	05: 100W or less

Note 1. The robot cable is standard cable (3L/5L/10L), but can be changed to flexible cable. See P.692 for details on robot cable.
Note 2. See P.600 for DIN rail mounting bracket.
Note 3. Select this selection when using the gateway function.

Basic specifications

AC servo motor output (W)		30		
Repeatability Note 1 (mm)		+/-0.02		
Deceleration mechanism		Ball screw ϕ8		
Ball screw lead (mm)		12	6	2
Maximum speed (mm/sec)		720	360	120
Maximum payload (kg)	Horizontal	4.5	6	6
	Vertical	1.2	2.4	7.2
Rated thrust (N)		32	64	153
Stroke (mm)		50 to 400 (50mm pitch)		
Overall length (mm)	Horizontal	Stroke+205		
	Vertical	Stroke+243		
Maximum outside dimension of body cross-section (mm)		W45×H55		
Cable length (m)		Standard: 3.5 / Option: 5, 10		
Degree of cleanliness		ISO CLASS 3 (ISO14644-1) Note 2		
Intake air (Nℓ/min) Note 3		50	30	15

Note 1. Positioning repeatability in one direction.
Note 2. When suction blower is used.
Note 3. The necessary intake amount varies depending on the use conditions and environment.

Allowable overhang Note

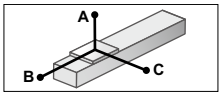

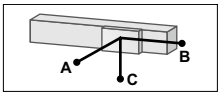

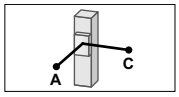

Horizontal installation (Unit: mm)

		A	B	C
Lead 12	2kg	339	90	174
	4.5kg	169	37	72
Lead 6	3kg	352	58	133
	6kg	234	27	62
Lead 2	3kg	1105	59	142
	6kg	520	27	66

Wall installation (Unit: mm)

		A	B	C
Lead 12	2kg	136	72	295
	4.5kg	44	20	111
Lead 6	3kg	101	41	254
	6kg	27	10	127
Lead 2	3kg	110	41	805
	6kg	28	10	290

Vertical installation (Unit: mm)

		A	C
Lead 12	1.2kg	118	118
Lead 6	2.4kg	52	54
Lead 2	3kg	38	39
	7.2kg	0	0

Note. Distance from center of slider top to center of gravity of object being carried at a guide service life of 10,000 km.
Note. Service life is calculated for 300mm stroke models.

Static loading moment

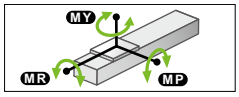

(Unit: N·m)

MY	MP	MR
15	19	18

Controller

Controller	Operation method
SR1-X05 RCX320 RCX340	Programming / I/O point trace / Remote command / Operation using RS-232C communication
TS-X105 TS-X205	I/O point trace / Remote command
RDV-X205	Pulse train control

C4LH

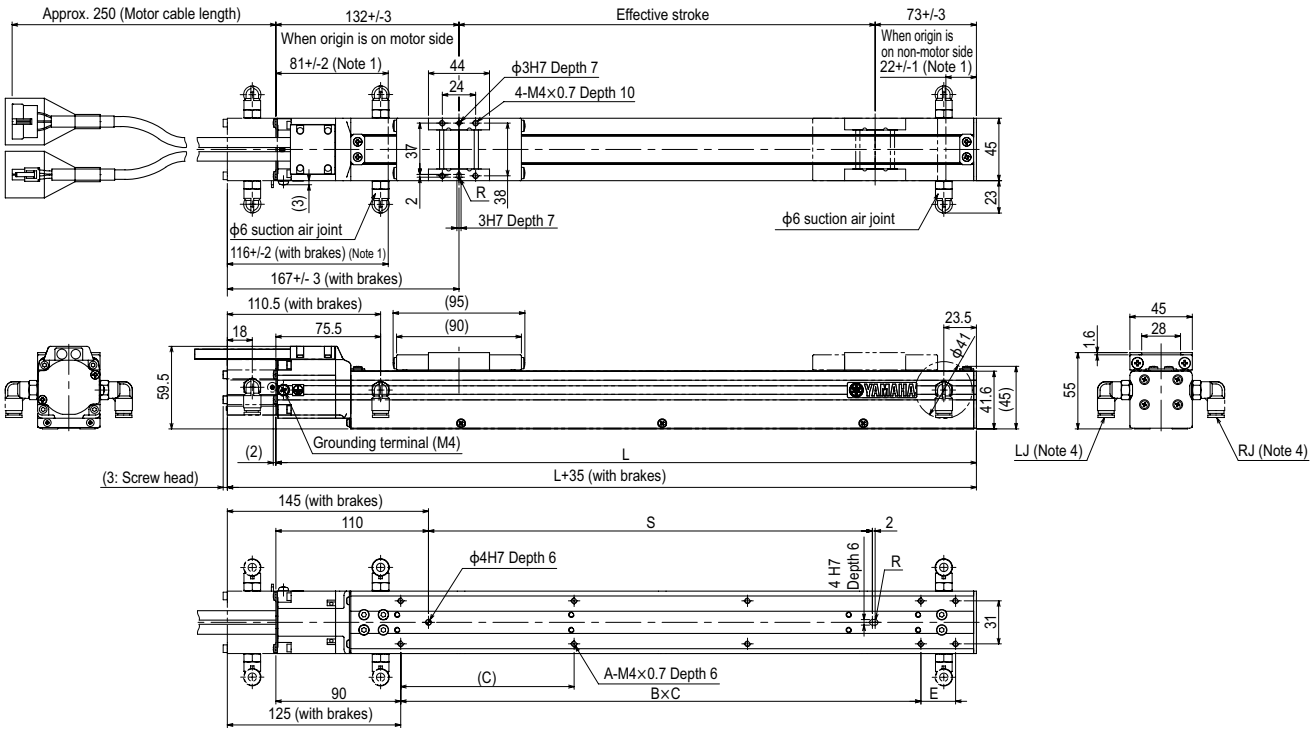

Effective stroke		50	100	150	200	250	300	350	400
L		255	305	355	405	455	505	555	605
A		4	6	6	8	8	10	10	10
B		1	2	2	2	2	3	3	4
C		150	100	125	125	125	125	125	125
E		0	0	0	50	100	25	75	0
S		70	120	170	220	270	320	370	420
Weight (kg) Note 3		1.4	1.5	1.7	1.8	2	2.1	2.3	2.4
Maximum speed for each stroke (mm/sec)	Lead 12	720							
	Lead 6	360							
	Lead 2	120							

Note 1. Stop positions are determined by the mechanical stoppers at both ends.
Note 2. Minimum bend radius of motor cable is R30.
Note 3. Weight of models with no brake. The weight of brake-attached models is 0.2 kg heavier than the models with no brake shown in the table.
Note 4. Either right or left can be selected for the installation direction for the φ6 intake air joint. (The left side is the standard.)
Note 5. External view of C4LH is identical to C4L.

Controller SR1-X ▸ 618 TS-X ▸ 592 RDV-X ▸ 606

C5L

- High lead: Lead 20
- Origin on the non-motor side is selectable

Ordering method

C5L -	Model	Lead designation	Brake Note 1	Direction of air coupler installation	Origin position change	Stroke	Cable length Note 2	ERCD -	Controller	I/O connector specification
		20: 20mm 12: 12mm 6: 6mm	No entry: With no brake BK: With brake	LJ: Left (Standard) RJ: Right	None: Standard Z: Non-motor side	50 to 800 (50mm pitch)	1K: 1m 3K: 3.5m 5K: 5m 10K: 10m			CN1: I/O flat cable 1m (Standard) CN2: Twisted-pair cable 2m (pulse train function)

Note 1. The model with a lead of 20mm cannot select specifications with brake (vertical specifications).
Note 2. The robot cable is flexible and resists bending. See P.692 for details on robot cable.

Basic specifications

AC servo motor output (W)		30		
Repeatability Note 1 (mm)		+/-0.02		
Deceleration mechanism		Ball screw φ12		
Ball screw lead (mm)		20	12	6
Maximum speed (mm/sec)		1000	800	400
Maximum payload (kg)	Horizontal	3	5	9
	Vertical	-	1.2	2.4
Rated thrust (N)		19	32	64
Stroke (mm)		50 to 800 (50mm pitch)		
Overall length (mm)	Horizontal	Stroke+201.5		
	Vertical	Stroke+239.5		
Maximum outside dimension of body cross-section (mm)		W55×H65		
Cable length (m)		Standard: 3.5 / Option: 1,5, 10		
Degree of cleanliness		ISO CLASS 3 (ISO14644-1) Note 2		
Intake air (Nℓ/min) Note 3		80	50	30

Note 1. Positioning repeatability in one direction.
Note 2. When suction blower is used.
Note 3. The necessary intake amount varies depending on the use conditions and environment.

Allowable overhang Note

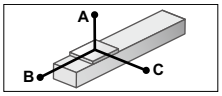

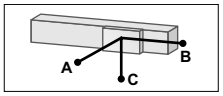

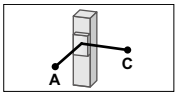

Horizontal installation (Unit: mm)

		A	B	C
Lead 20	1kg	1584	324	745
	3kg	699	104	251
Lead 12	2kg	1166	159	406
	5kg	551	59	155
Lead 6	3kg	1194	104	294
	9kg	624	31	89

Wall installation (Unit: mm)

		A	B	C
Lead 20	1kg	679	303	1505
	3kg	215	87	605
Lead 12	2kg	364	126	1073
	5kg	123	28	438
Lead 6	3kg	259	72	354
	9kg	50	0	154

Vertical installation (Unit: mm)

		A	C
Lead 12	1.2kg	246	245
Lead 6	2.4kg	110	110

Note. Distance from center of slider top to center of gravity of object being carried at a guide service life of 10,000 km.
Note. Service life is calculated for 600mm stroke models.

Static loading moment

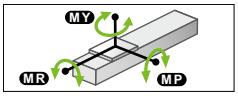

(Unit: N·m)

MY	MP	MR
30	34	40

Controller

Controller	Operation method
ERCD	Pulse train control / Programming / I/O point trace / Remote command / Operation using RS-232C communication

C5L

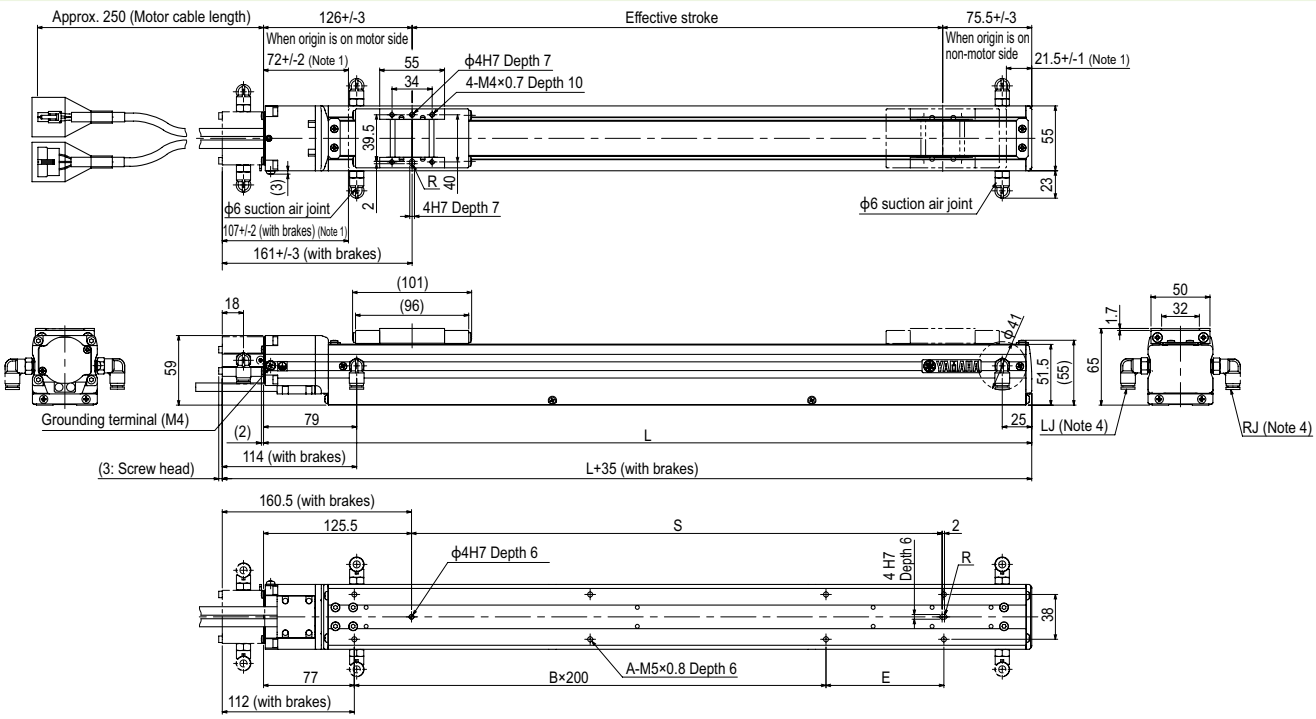

Effective stroke		50	100	150	200	250	300	350	400	450	500	550	600	650	700	750	800
L		251.5	301.5	351.5	401.5	451.5	501.5	551.5	601.5	651.5	701.5	751.5	801.5	851.5	901.5	951.5	1001.5
A		4	4	4	6	6	6	6	8	8	8	8	10	10	10	10	12
B		0	0	0	1	1	1	1	2	2	2	2	3	3	3	3	4
E		100	200	200	100	100	200	200	100	100	200	200	100	100	200	200	100
S		50	100	150	200	250	300	350	400	450	500	550	600	650	700	750	800
Weight (kg) Note 3		1.7	2.0	2.2	2.5	2.7	3.0	3.2	3.4	3.7	3.9	4.2	4.4	4.7	4.9	5.1	5.4
Maximum speed for each stroke Note 5 (mm/sec)	Lead 20	1000													900	800	700
	Speed setting	-													90%	80%	70%
	Lead 12	800												640	560	480	440
	Lead 6	400												320	280	240	220
	Speed setting	-												80%	70%	60%	55%

Note 1. Stop positions are determined by the mechanical stoppers at both ends.
Note 2. Minimum bend radius of motor cable is R30.
Note 3. Weight of models with no brake. The weight of brake-attached models is 0.2 kg heavier than the models with no brake shown in the table.
Note 4. Either right or left can be selected for the installation direction for the φ6 intake air joint. (The left side is the standard.)
Note 5. When the stroke is longer than 600mm, resonance of the ball screw may occur depending on the operation conditions (critical speed). In this case, reduce the speed setting on the program by referring to the maximum speeds shown in the table at the left.
Note 6. External view of C5LH is identical to C5L.

Controller ERCD ▶ 612

C5LH

- High lead: Lead 20
- Origin on the non-motor side is selectable

Ordering method

C5LH - [ ] - [ ] - [ ] - [ ] - [ ] - [ ]

Model	Lead designation	Brake Note 1	Direction of air coupler installation	Origin position change	Stroke	Cable length Note 2
	20: 20mm 12: 12mm 6: 6mm	No entry: With no brake BK: With brake	LJ: Left (Standard) RJ: Right	None: Standard Z: Non-motor side	50 to 800 (50mm pitch)	3L: 3.5m 5L: 5m 10L: 10m 3K/5K/10K (Flexible cable)

TSX - [ ] - [ ] - [ ] - [ ] - [ ]

Positioner Note 3	Driver: Power-supply voltage / Power capacity	LCD monitor	I/O selection	Battery
TS-X	105: 100V/100W or less 205: 200V/100W or less	No entry: None L: With LCD	NP: NPN PN: PNP CC: CC-Link DN: DeviceNet™ EP: EtherNet/IP™ PT: PROFINET GW: No I/O board Note 4	B: With battery (Absolute) N: None (Incremental)

SR1-X - **05** - [ ] - [ ] - [ ]

Controller	Driver: Power capacity	Usable for CE	I/O selection	Battery
	05: 100W or less	No entry: Standard E: CE marking	N: NPN P: PNP CC: CC-Link DN: DeviceNet™ PB: PROFIBUS	B: With battery (Absolute) N: None (Incremental)

RDV-X - **2** - **05**

Driver	Power-supply voltage	Driver: Power capacity
	2: AC200V	05: 100W or less

Note 1. The model with a lead of 20mm cannot select specifications with brake (vertical specifications).
Note 2. The robot cable is standard cable (3L/5L/10L), but can be changed to flexible cable. See P.692 for details on robot cable.
Note 3. See P.600 for DIN rail mounting bracket.
Note 4. Select this selection when using the gateway function.

Basic specifications

AC servo motor output (W)		30		
Repeatability Note 1 (mm)		+/-0.02		
Deceleration mechanism		Ball screw ϕ12		
Ball screw lead (mm)		20	12	6
Maximum speed (mm/sec)		1000	800	400
Maximum payload (kg)	Horizontal	3	5	9
	Vertical	-	1.2	2.4
Rated thrust (N)		19	32	64
Stroke (mm)		50 to 800 (50mm pitch)		
Overall length (mm)	Horizontal	Stroke+201.5		
	Vertical	Stroke+239.5		
Maximum outside dimension of body cross-section (mm)		W55×H65		
Cable length (m)		Standard: 3.5 / Option: 5, 10		
Degree of cleanliness		ISO CLASS 3 (ISO14644-1) Note 2		
Intake air (Nℓ/min) Note 3		80	50	30

Note 1. Positioning repeatability in one direction.
Note 2. When suction blower is used.
Note 3. The necessary intake amount varies depending on the use conditions and environment.

Allowable overhang Note

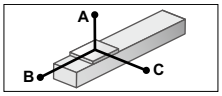

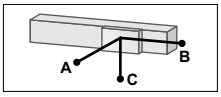

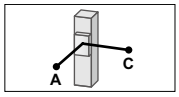

Horizontal installation (Unit: mm)

		A	B	C
Lead 20	1kg	1099	324	645
	3kg	488	104	241
Lead 12	2kg	916	159	398
	5kg	436	60	152
Lead 6	3kg	1194	105	294
	9kg	624	31	89

Wall installation (Unit: mm)

		A	B	C
Lead 20	1kg	602	303	950
	3kg	197	87	432
Lead 12	2kg	347	141	800
	5kg	119	44	355
Lead 6	3kg	259	87	950
	9kg	50	15	385

Vertical installation (Unit: mm)

		A	C
Lead 12	1.2kg	240	239
Lead 6	2.4kg	109	110

Note. Distance from center of slider top to center of gravity of object being carried at a guide service life of 10,000 km.
Note. Service life is calculated for 600mm stroke models.

Static loading moment

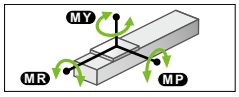

(Unit: N·m)

MY	MP	MR
30	34	40

Controller

Controller	Operation method
SR1-X05 RCX320 RCX340	Programming / I/O point trace / Remote command / Operation using RS-232C communication
TS-X105 TS-X205	I/O point trace / Remote command
RDV-X205	Pulse train control

C5LH

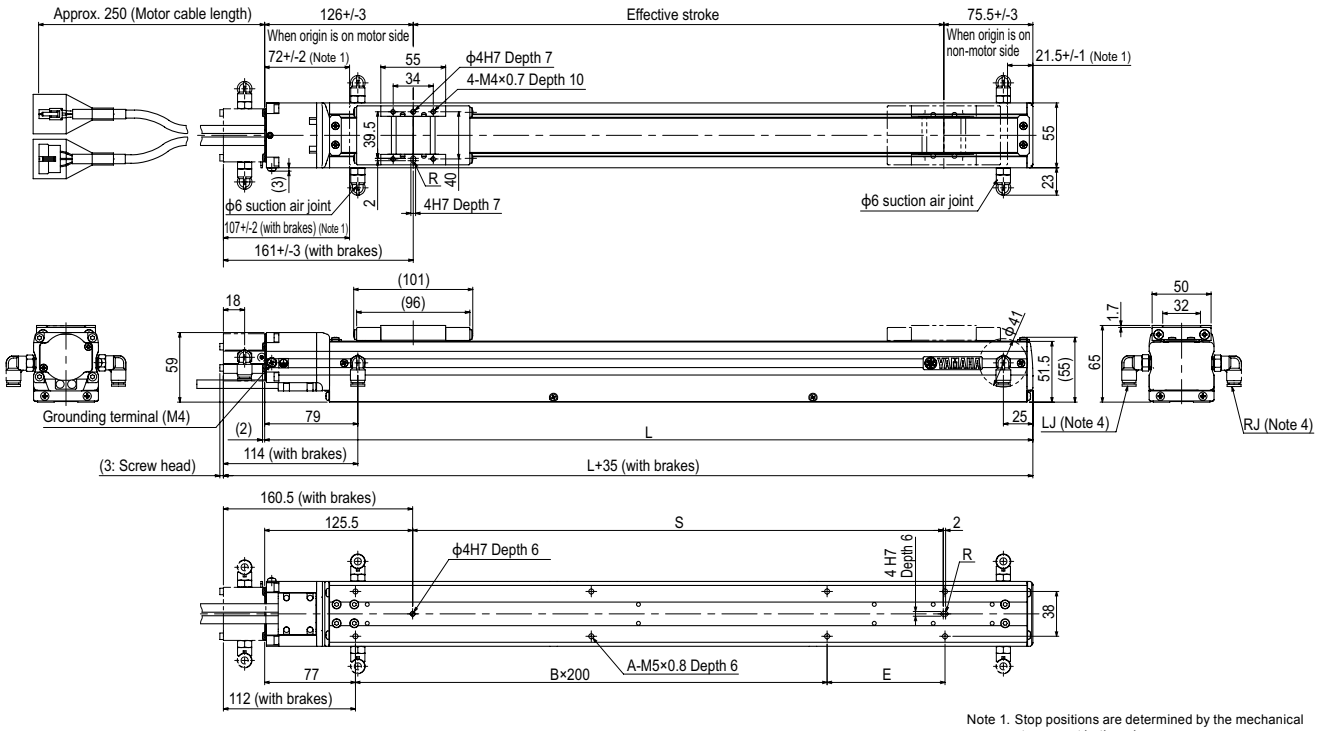

Effective stroke		50	100	150	200	250	300	350	400	450	500	550	600	650	700	750	800
L		251.5	301.5	351.5	401.5	451.5	501.5	551.5	601.5	651.5	701.5	751.5	801.5	851.5	901.5	951.5	1001.5
A		4	4	4	6	6	6	6	8	8	8	8	10	10	10	10	12
B		0	0	0	1	1	1	1	2	2	2	2	3	3	3	3	4
E		100	200	200	100	100	200	200	100	100	200	200	100	100	200	200	100
S		50	100	150	200	250	300	350	400	450	500	550	600	650	700	750	800
Weight (kg) Note 3		1.7	2.0	2.2	2.5	2.7	3.0	3.2	3.4	3.7	3.9	4.2	4.4	4.7	4.9	5.1	5.4
Maximum speed for each stroke Note 5 (mm/sec)	Lead 20	1000													900	800	700
	Speed setting	-													90%	80%	70%
	Lead 12	800												640	560	480	440
	Lead 6	400												320	280	240	220
	Speed setting	-												80%	70%	60%	55%

Note 1. Stop positions are determined by the mechanical stoppers at both ends.
Note 2. Minimum bend radius of motor cable is R30.
Note 3. Weight of models with no brake. The weight of brake-attached models is 0.2 kg heavier than the models with no brake shown in the table.
Note 4. Either right or left can be selected for the installation direction for the φ6 intake air joint. (The left side is the standard.)
Note 5. When the stroke is longer than 600mm, resonance of the ball screw may occur depending on the operation conditions (critical speed). In this case, reduce the speed setting on the program by referring to the maximum speeds shown in the table at the left.
Note 6. External view of C5LH is identical to C5L.

Controller SR1-X ▸ 618 TS-X ▸ 592 RDV-X ▸ 606

C6L

- High lead: Lead 20
- Origin on the non-motor side is selectable

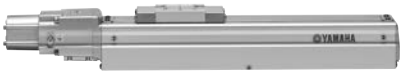

Ordering method

C6L – [ ] – [ ] – [ ] – [ ] – [ ] – [ ]

Model	Lead designation	Brake Note 1	Direction of air coupler installation	Origin position change	Stroke	Cable length Note 2
	20: 20mm 12: 12mm 6: 6mm	No entry: With no brake BK: With brake	LJ: Left (Standard) RJ: Right	None: Standard Z: Non-motor side	50 to 800 (50mm pitch)	3L: 3.5m 5L: 5m 10L: 10m 3K/5K/10K (Flexible cable)

TSX – [ ] – [ ] – [ ] – [ ]

Positioner Note 3	Driver: Power-supply voltage / Power capacity	LCD monitor	I/O selection	Battery
TS-X	105: 100V/100W or less 205: 200V/100W or less	No entry: None L: With LCD	NP: NPN PN: PNP CC: CC-Link DN: DeviceNet™ EP: EtherNet/IP™ PT: PROFINET GW: No I/O board Note 4	B: With battery (Absolute) N: None (Incremental)

SR1-X – **05** – [ ] – [ ] – [ ]

Controller	Driver: Power capacity	Usable for CE	I/O selection	Battery
	05: 100W or less	No entry: Standard E: CE marking	N: NPN P: PNP CC: CC-Link DN: DeviceNet™ PB: PROFIBUS	B: With battery (Absolute) N: None (Incremental)

RDV-X – **2** – **05** – **RBR1**

Driver	Power-supply voltage	Driver: Power capacity	Regenerative unit
	2: AC200V	05: 100W or less	

Note 1. The model with a lead of 20mm cannot select specifications with brake (vertical specifications).
Note 2. The robot cable is standard cable (3L/5L/10L), but can be changed to flexible cable. See P.692 for details on robot cable.
Note 3. See P.600 for DIN rail mounting bracket.
Note 4. Select this selection when using the gateway function.

Basic specifications

AC servo motor output (W)		60		
Repeatability Note 1 (mm)		+/-0.02		
Deceleration mechanism		Ball screw ϕ12		
Ball screw lead (mm)		20	12	6
Maximum speed (mm/sec)		1000	800	400
Maximum payload (kg)	Horizontal	10	12	30
	Vertical	-	4	8
Rated thrust (N)		51	85	170
Stroke (mm)		50 to 800 (50mm pitch)		
Overall length (mm)	Horizontal	Stroke+247.5		
	Vertical	Stroke+285.5		
Maximum outside dimension of body cross-section (mm)		W65×H65		
Cable length (m)		Standard: 3.5 / Option: 5, 10		
Degree of cleanliness		ISO CLASS 3 (ISO14644-1) Note 2		
Intake air (Nℓ/min) Note 3		80	50	30

Note 1. Positioning repeatability in one direction.
Note 2. When suction blower is used.
Note 3. The necessary intake amount varies depending on the use conditions and environment.

Allowable overhang Note

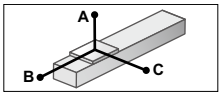

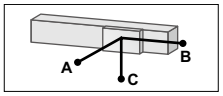

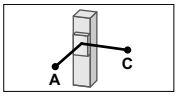

Horizontal installation (Unit: mm)

		A	B	C
Lead 20	2kg	433	192	295
	6kg	145	59	104
	10kg	110	33	75
Lead 12	3kg	622	125	336
	8kg	271	41	121
	12kg	214	24	76
Lead 6	5kg	692	73	236
	10kg	372	33	109
	30kg	157	0	25

Wall installation (Unit: mm)

		A	B	C
Lead 20	2kg	300	174	365
	6kg	83	44	105
	10kg	43	18	71
Lead 12	3kg	291	96	317
	8kg	87	13	110
	12kg	41	0	126
Lead 6	5kg	202	45	237
	10kg	70	5	97
	30kg	0	0	0

Vertical installation (Unit: mm)

		A	C
Lead 12	1kg	353	351
	2kg	163	164
	4kg	68	70
Lead 6	2kg	169	170
	4kg	71	73
	8kg	21	24

Note. Distance from center of slider top to center of gravity of object being carried at a guide service life of 10,000 km.
Note. Service life is calculated for 600mm stroke models.

Static loading moment

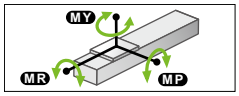

(Unit: N·m)

MY	MP	MR
35	40	50

Controller

Controller	Operation method
SR1-X05 RCX320 RCX340	Programming / I/O point trace / Remote command / Operation using RS-232C communication
TS-X105 TS-X205	I/O point trace / Remote command
RDV-X205-RBR1	Pulse train control

C6L

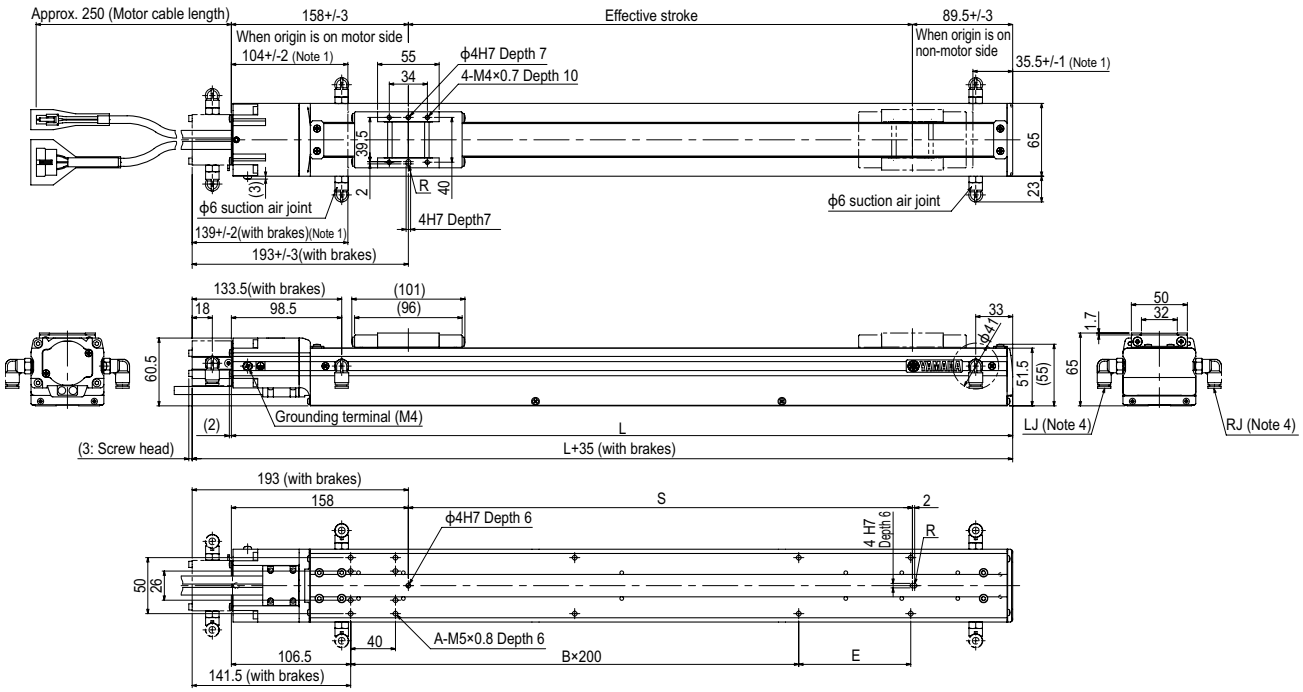

Effective stroke		50	100	150	200	250	300	350	400	450	500	550	600	650	700	750	800
L		297.5	347.5	397.5	447.5	497.5	547.5	597.5	647.5	697.5	747.5	797.5	847.5	897.5	947.5	997.5	1047.5
A		10	10	10	12	12	12	12	14	14	14	14	16	16	16	16	18
B		0	0	0	1	1	1	1	2	2	2	2	3	3	3	3	4
E		150	200	200	100	100	200	200	100	100	200	200	100	100	200	200	100
S		50	100	150	200	250	300	350	400	450	500	550	600	650	700	750	800
Weight (kg) Note 3		2.6	2.9	3.1	3.4	3.7	4.0	4.3	4.6	4.9	5.2	5.4	5.7	6.0	6.3	6.6	6.8
Maximum speed for each stroke Note 5 (mm/sec)	Lead 20	1000													900	800	700
	Speed setting	-													90%	80%	70%
	Lead 12	800												680	600	520	480
	Lead 6	400												340	300	260	240
	Speed setting	-												85%	75%	65%	60%

Note 1. Stop positions are determined by the mechanical stoppers at both ends.
Note 2. Minimum bend radius of motor cable is R30.
Note 3. Weight of models with no brake. The weight of brake-attached models is 0.2 kg heavier than the models with no brake shown in the table.
Note 4. Either right or left can be selected for the installation direction for the φ6 intake air joint. (The left side is the standard.)
Note 5. When the stroke is longer than 600mm, resonance of the ball screw may occur depending on the operation conditions (critical speed). In this case, reduce the speed setting on the program by referring to the maximum speeds shown in the table at the left.

Controller SR1-X ▶ 618 TS-X ▶ 592 RDV-X ▶ 606

C8

- High lead: Lead 20
- Origin on the non-motor side is selectable

Ordering method

C8 – [ ] – [ ] – [ ] – [ ] – [ ]

Model	Lead	Brake Note 1	Option	Stroke	Cable length Note 2
	20: 20mm 12: 12mm 6: 6mm	No entry: With no brake BK: With brake	Origin position change: None: Standard Z: Non-motor side	150 to 800 (50mm pitch)	3L: 3.5m 5L: 5m 10L: 10m 3K/5K/10K (Flexible cable)

TSX – [ ] – [ ] – [ ] – [ ]

Positioner Note 3	Driver: Power-supply voltage / Power capacity	LCD monitor	I/O selection	Battery
TS-X	105: 100V/100W or less 205: 200V/100W or less	No entry: None L: With LCD	NP: NPN PN: PNP CC: CC-Link DN: DeviceNet™ EP: EtherNet/IP™ PT: PROFINET GW: No I/O board Note 4	B: With battery (Absolute) N: None (Incremental)

SR1-X – **05** – [ ] – [ ] – [ ]

Controller	Driver: Power capacity	Usable for CE	I/O selection	Battery
	05: 100W or less	No entry: Standard E: CE marking	N: NPN P: PNP CC: CC-Link DN: DeviceNet™ PB: PROFIBUS	B: With battery (Absolute) N: None (Incremental)

RDV-X – **2** – **05** – **RBR1**

Driver	Power-supply voltage	Driver: Power capacity	Regenerative unit
	2: AC200V	05: 100W or less	

Note 1. The model with a lead of 20mm cannot select specifications with brake (vertical specifications).
Note 2. The robot cable is standard cable (3L/5L/10L), but can be changed to flexible cable. See P.692 for details on robot cable.
Note 3. See P.600 for DIN rail mounting bracket.
Note 4. Select this selection when using the gateway function.

Basic specifications

AC servo motor output (W)		100		
Repeatability Note 1 (mm)		+/-0.02		
Deceleration mechanism		Ball screw ϕ12		
Ball screw lead (mm)		20	12	6
Maximum speed Note 2 (mm/sec)		1000	720	360
Maximum payload (kg)	Horizontal	12	20	40
	Vertical	–	4	8
Rated thrust (N)		84	141	283
Stroke (mm)		150 to 800 (50mm pitch)		
Overall length (mm)	Horizontal	Stroke+320		
	Vertical	Stroke+355		
Maximum outside dimension of body cross-section (mm)		W80 × H75		
Cable length (m)		Standard: 3.5 / Option: 5, 10		
Degree of cleanliness		CLASS 10 Note 3		
Intake air (Nℓ/min)		30 to 90 Note 4		

Note 1. Positioning repeatability in one direction.
Note 2. When the stroke is longer than 600mm, resonance of the ball screw may occur depending on the operation conditions (critical speed). In this case, reduce the speed setting on the program by referring to the maximum speeds shown in the table below.
Note 3. Per 1cf (0.1μm base), when suction blower is used.
Note 4. The necessary intake amount varies depending on the use conditions and environment.

Allowable overhang Note

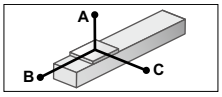

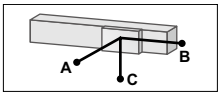

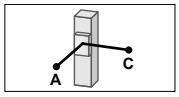

Horizontal installation (Unit: mm)

		A	B	C
Lead 20	5kg	245	85	146
	10kg	131	39	69
	12kg	115	31	57
Lead 12	5kg	364	92	192
	10kg	207	43	92
	15kg	144	26	41
	20kg	112	18	40
Lead 6	10kg	406	47	124
	20kg	225	20	54
	30kg	162	11	31
	40kg	168	7	20

Wall installation (Unit: mm)

		A	B	C
Lead 20	5kg	121	71	211
	10kg	42	24	88
	12kg	29	16	66
Lead 12	5kg	164	78	328
	10kg	62	29	158
	15kg	26	12	83
	20kg	7	4	32
Lead 6	10kg	87	33	353
	20kg	18	6	127
	30kg	0	0	0
	40kg	0	0	0

Vertical installation (Unit: mm)

		A	C
Lead 12	1kg	440	442
	2kg	207	209
	3kg	130	132
	4kg	91	92
Lead 6	2kg	237	238
	4kg	106	96
	6kg	62	62
	8kg	34	40

Note. Distance from center of slider top to center of gravity of object being carried at a guide service life of 10,000 km.

Static loading moment

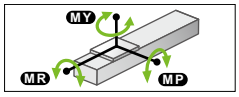

(Unit: N·m)

MY	MP	MR
70	95	110

Controller

Controller	Operation method
SR1-X05 RCX320 RCX340	Programming / I/O point trace / Remote command / Operation using RS-232C communication
TS-X105 TS-X205	I/O point trace / Remote command
RDV-X205-RBR1	Pulse train control

C8

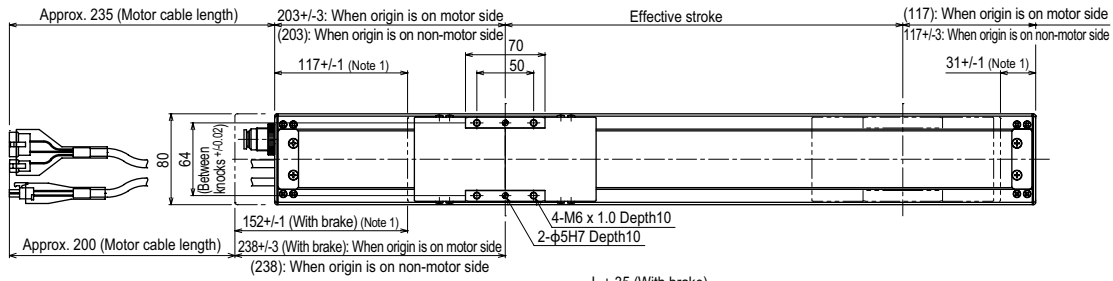

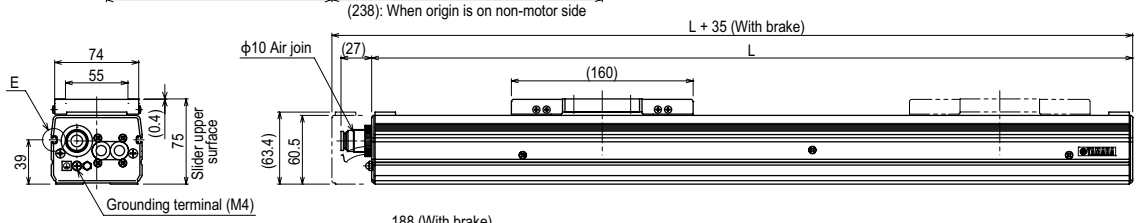

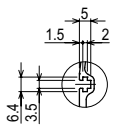

Note Recommended plate nut: M3 (□6*t1.6)

E: Detail of T-groove

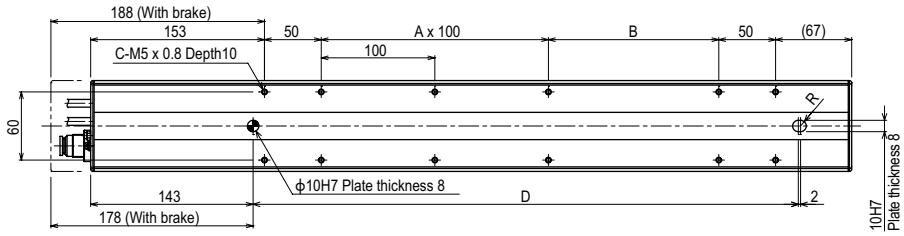

Effective stroke		150	200	250	300	350	400	450	500	550	600	650	700	750	800
L		470	520	570	620	670	720	770	820	870	920	970	1020	1070	1120
A		0	1	1	2	2	3	3	4	4	5	5	6	6	7
B		150	100	150	100	150	100	150	100	150	100	150	100	150	100
C		8	10	10	12	12	14	14	16	16	18	18	20	20	22
D		280	330	380	430	480	530	580	630	680	730	780	830	880	930
Weight (kg) Note 3		3.6	3.9	4.1	4.4	4.7	5.0	5.3	5.6	5.9	6.2	6.4	6.7	7.0	7.3
Maximum speed Note 4 (mm/sec)	Lead 20	1000										950	800	700	650
	Speed setting	–										95%	80%	70%	65%
	Lead 12	720									648	540	468	432	360
	Lead 6	360									324	270	234	216	180
	Speed setting	–									90%	75%	65%	60%	50%

Note 1. Stop positions are determined by the mechanical stoppers at both ends.
Note 2. Minimum bend radius of motor cable is R50.
Note 3. Weight of models with no brake. The weight of brake-attached models is 0.3 kg heavier than the models with no brake shown in the table.
Note 4. When the stroke is longer than 600mm, resonance of the ball screw may occur depending on the operation conditions (critical speed). In this case, reduce the speed setting on the program by referring to the maximum speeds shown in the table at the left.

Controller | SR1-X ▸ 618 | TS-X ▸ 592 | RDV-X ▸ 606

C8L

Origin on the non-motor side is selectable

Ordering method

C8L - [ ] - [ ] - [ ] - [ ] - [ ]

Model	Lead	Brake	Option	Stroke	Cable length Note 1
	20: 20mm 10: 10mm 5: 5mm	No entry: With no brake BK: With brake	Origin position change: None: Standard, Z: Non-motor side	150 to 1050 (50mm pitch)	3L: 3.5m 5L: 5m 10L: 10m 3K/5K/10K (Flexible cable)

TSX - [ ] - [ ] - [ ] - [ ] - [ ]

Positioner Note 2	Driver: Power-supply voltage / Power capacity	LCD monitor	I/O selection	Battery
TS-X	105: 100V/100W or less 205: 200V/100W or less	No entry: None L: With LCD	NP: NPN PN: PNP CC: CC-Link DN: DeviceNet™ EP: EtherNet/IP™ PT: PROFINET GW: No I/O board Note 3	B: With battery (Absolute) N: None (Incremental)

SR1-X - **05** - [ ] - [ ] - [ ]

Controller	Driver: Power capacity	Usable for CE	I/O selection	Battery
	05: 100W or less	No entry: Standard E: CE marking	N: NPN P: PNP CC: CC-Link DN: DeviceNet™ PB: PROFIBUS	B: With battery (Absolute) N: None (Incremental)

RDV-X - **2** - **05** - **RBR1**

Driver	Power-supply voltage	Driver: Power capacity	Regenerative unit
	2: AC200V	05: 100W or less	

Note 1. The robot cable is standard cable (3L/5L/10L), but can be changed to flexible cable. See P.692 for details on robot cable.
Note 2. See P.600 for DIN rail mounting bracket.
Note 3. Select this selection when using the gateway function.

Basic specifications

AC servo motor output (W)		100		
Repeatability Note 1 (mm)		+/-0.01		
Deceleration mechanism		Ball screw ϕ15		
Ball screw lead (mm)		20	10	5
Maximum speed Note 2 (mm/sec)		1000	600	300
Maximum payload (kg)	Horizontal	20	40	50
	Vertical	4	8	16
Rated thrust (N)		84	169	339
Stroke (mm)		150 to 1050 (50mm pitch)		
Overall length (mm)	Horizontal	Stroke+325		
	Vertical	Stroke+360		
Maximum outside dimension of body cross-section (mm)		W80 × H75		
Cable length (m)		Standard: 3.5 / Option: 5, 10		
Degree of cleanliness		CLASS 10 Note 3		
Intake air (Nℓ/min)		30 to 90 Note 4		

Note 1. Positioning repeatability in one direction.
Note 2. When the stroke is longer than 700mm, resonance of the ball screw may occur depending on the operation conditions (critical speed). In this case, reduce the speed setting on the program by referring to the maximum speeds shown in the table below.
Note 3. Per 1cf (0.1μm base), when suction blower is used.
Note 4. The necessary intake amount varies depending on the use conditions and environment.

Allowable overhang Note

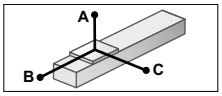

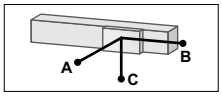

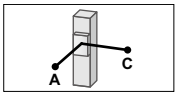

Horizontal installation (Unit: mm)

		A	B	C
Lead 20	5kg	259	122	179
	10kg	149	55	89
	15kg	100	33	56
	20kg	95	22	41
Lead 10	10kg	251	61	130
	20kg	127	25	55
	30kg	90	14	31
	40kg	69	8	18
Lead 5	20kg	256	29	76
	30kg	188	16	43
	40kg	96	10	28
	50kg	33	6	18

Wall installation (Unit: mm)

		A	B	C
Lead 20	5kg	147	100	220
	10kg	53	32	97
	15kg	17	10	39
	20kg	0	0	0
Lead 10	10kg	87	41	197
	20kg	10	4	37
	30kg	0	0	0
	40kg	0	0	0
Lead 5	20kg	24	9	152
	30kg	0	0	0
	40kg	0	0	0
	50kg	0	0	0

Vertical installation (Unit: mm)

		A	C
Lead 20	2kg	255	260
	4kg	111	115
Lead 10	2kg	300	302
	4kg	131	133
	6kg	75	77
	8kg	47	49
Lead 5	5kg	113	114
	10kg	37	38
	15kg	12	12
	16kg	9	9

Note. Distance from center of slider top to center of gravity of object being carried at a guide service life of 10,000 km.

Static loading moment

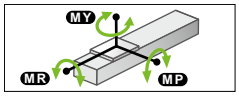

(Unit: N·m)

MY	MP	MR
70	95	110

Controller

Controller	Operation method
SR1-X05 RCX320 RCX340	Programming / I/O point trace / Remote command / Operation using RS-232C communication
TS-X105 TS-X205	I/O point trace / Remote command
RDV-X205-RBR1	Pulse train control

C8L

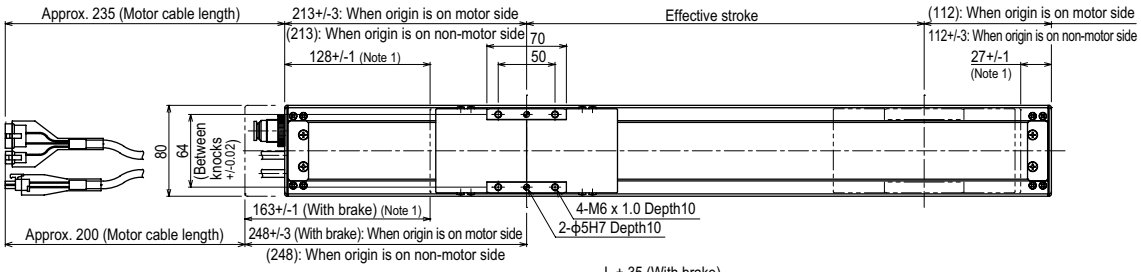

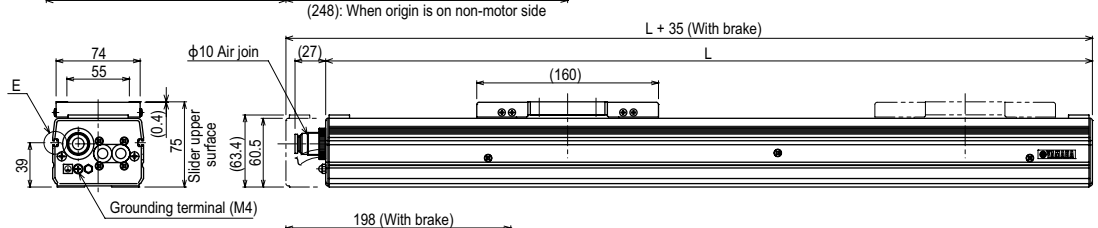

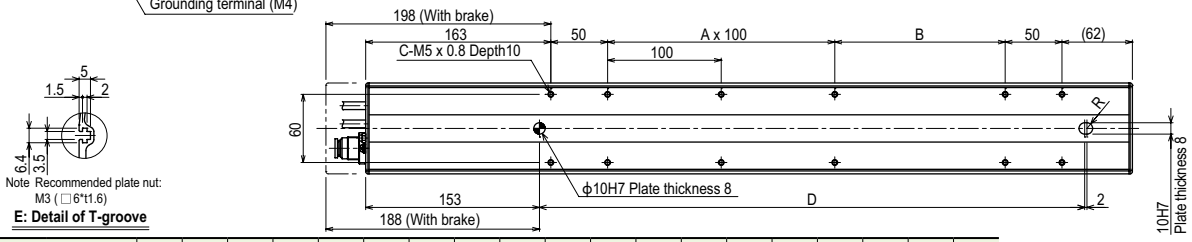

Note Recommended plate nut: M3 (□6*t1.6)

E: Detail of T-groove

Effective stroke		150	200	250	300	350	400	450	500	550	600	650	700	750	800	850	900	950	1000	1050
L		475	525	575	625	675	725	775	825	875	925	975	1025	1075	1125	1175	1225	1275	1325	1375
A		0	1	1	2	2	3	3	4	4	5	5	6	6	7	7	8	8	9	9
B		150	100	150	100	150	100	150	100	150	100	150	100	150	100	150	100	150	100	150
C		8	10	10	12	12	14	14	16	16	18	18	20	20	22	22	24	24	26	26
D		280	330	380	430	480	530	580	630	680	730	780	830	880	930	980	1030	1080	1130	1180
Weight (kg) Note 3		3.9	4.2	4.5	4.8	5.1	5.4	5.7	6.0	6.4	6.7	7.0	7.3	7.6	7.9	8.2	8.5	8.8	9.2	9.5
Maximum speed Note 4 (mm/sec)	Lead 20	1000												900	800	700	650	600	550	500
	Speed setting	–												90%	80%	70%	65%	60%	55%	50%
	Lead 10	600											510	450	390	360	330	300	270	240
	Lead 5	300											255	225	195	180	165	150	135	120
	Speed setting	–											85%	75%	65%	60%	55%	50%	45%	40%

Note 1. Stop positions are determined by the mechanical stoppers at both ends.
Note 2. Minimum bend radius of motor cable is R50.
Note 3. Weight of models with no brake. The weight of brake-attached models is 0.3 kg heavier than the models with no brake shown in the table.
Note 4. When the stroke is longer than 700mm, resonance of the ball screw may occur depending on the operation conditions (critical speed). In this case, reduce the speed setting on the program by referring to the maximum speeds shown in the table at the left.

Controller SR1-X ▶ 618 | TS-X ▶ 592 | RDV-X ▶ 606

C8LH

Origin on the non-motor side is selectable

Ordering method

C8LH - [ ] - [ ] - [ ] - [ ] -

Model	Lead	Option	Stroke	Cable length Note 1
	20: 20mm 10: 10mm 5: 5mm	Origin position change: None: Standard / Z: Non-motor side	150 to 1050 (50mm pitch)	3L: 3.5m 5L: 5m 10L: 10m 3K/5K/10K (Flexible cable)

TSX - [ ] - [ ] - [ ] - [ ] -

Positioner Note 2	Driver: Power-supply voltage / Power capacity	LCD monitor	I/O selection	Battery
TS-X	105: 100V/100W or less 205: 200V/100W or less	No entry: None L: With LCD	NP: NPN PN: PNP CC: CC-Link DN: DeviceNet™ EP: EtherNet/IP™ PT: PROFINET GW: No I/O board Note 3	B: With battery (Absolute) N: None (Incremental)

SR1-X - **05** - [ ] - [ ] - [ ] -

Controller	Driver: Power capacity	Usable for CE	I/O selection	Battery
	05: 100W or less	No entry: Standard E: CE marking	N: NPN P: NPP CC: CC-Link DN: DeviceNet™ PB: PROFIBUS	B: With battery (Absolute) N: None (Incremental)

RDV-X - **2** - **05** - **RBR1**

Driver	Power-supply voltage	Driver: Power capacity	Regenerative unit
	2: AC200V	05: 100W or less	

Note 1. The robot cable is standard cable (3L/5L/10L), but can be changed to flexible cable. See P.692 for details on robot cable.
Note 2. See P.600 for DIN rail mounting bracket.
Note 3. Select this selection when using the gateway function.

Basic specifications

AC servo motor output (W)		100	
Repeatability Note 1 (mm)		+/-0.01	
Deceleration mechanism		Ball screw ϕ15	
Ball screw lead (mm)		20	10	5
Maximum speed Note 2 (mm/sec)		1000	600	300
Maximum payload (kg)	Horizontal	30	60	80
Rated thrust (N)		84	169	339
Stroke (mm)		150 to 1050 (50mm pitch)	
Overall length (mm)		Stroke+389	
Maximum outside dimension of body cross-section (mm)		W80 × H75	
Cable length (m)		Standard: 3.5 / Option: 5, 10	
Degree of cleanliness		CLASS 10 Note 3	
Intake air (Nℓ/min)		30 to 90 Note 4	

Note 1. Positioning repeatability in one direction.
Note 2. When the stroke is longer than 650mm, resonance of the ball screw may occur depending on the operation conditions (critical speed). In this case, reduce the speed setting on the program by referring to the maximum speeds shown in the table below.
Note 3. Per 1cf (0.1μm base), when suction blower is used.
Note 4. The necessary intake amount varies depending on the use conditions and environment.

Allowable overhang Note

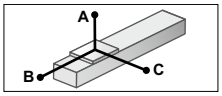

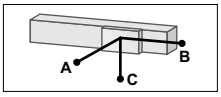

Horizontal installation (Unit: mm)

		A	B	C
Lead 20	10kg	687	274	200
	20kg	401	125	92
	30kg	338	76	57
Lead 10	20kg	622	137	111
	40kg	472	57	47
	60kg	375	30	25
Lead 5	20kg	1087	148	127
	40kg	844	63	54
	60kg	707	34	29
	80kg	594	20	17

Wall installation (Unit: mm)

		A	B	C
Lead 20	10kg	163	225	617
	20kg	56	76	302
	30kg	20	27	182
Lead 10	20kg	74	90	517
	40kg	8	11	196
	60kg	–	–	–
Lead 5	20kg	89	104	974
	40kg	15	18	505
	60kg	–	–	–
	80kg	–	–	–

Note. Distance from center of slider top to center of gravity of object being carried at a guide service life of 10,000 km.

Static loading moment

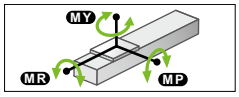

(Unit: N·m)

MY	MP	MR
128	163	143

Controller

Controller	Operation method
SR1-X05 RCX320 RCX340	Programming / I/O point trace / Remote command / Operation using RS-232C communication
TS-X105 TS-X205	I/O point trace / Remote command
RDV-X205-RBR1	Pulse train control

C8LH

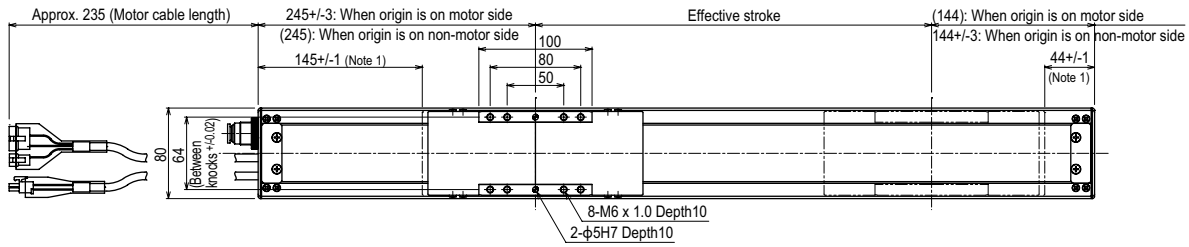

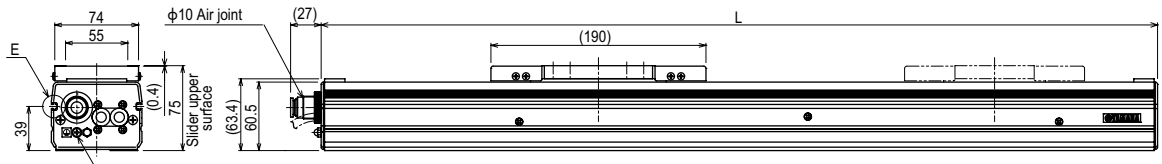

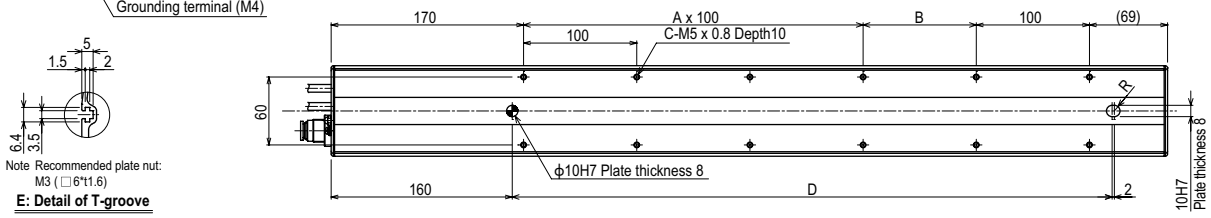

Effective stroke		150	200	250	300	350	400	450	500	550	600	650	700	750	800	850	900	950	1000	1050
L		539	589	639	689	739	789	839	889	939	989	1039	1089	1139	1189	1239	1289	1339	1389	1439
A		1	1	2	2	3	3	4	4	5	5	6	6	7	7	8	8	9	9	10
B		100	150	100	150	100	150	100	150	100	150	100	150	100	150	100	150	100	150	100
C		8	8	10	10	12	12	14	14	16	16	18	18	20	20	22	22	24	24	26
D		330	380	430	480	530	580	630	680	730	780	830	880	930	980	1030	1080	1130	1180	1230
Weight (kg)		4.7	5.0	5.3	5.6	5.9	6.2	6.6	6.9	7.2	7.5	7.8	8.1	8.4	8.7	9.0	9.3	9.7	10.0	10.3
Maximum speed Note 3 (mm/sec)	Lead 20	1000										–	900	800	700	650	600	550	500	450
	Speed setting	–										–	90%	80%	70%	65%	60%	55%	50%	45%
	Lead 10	600										510	450	390	360	330	300	270	240	210
	Lead 5	300										255	225	195	180	165	150	135	120	105
	Speed setting	–										85%	75%	65%	60%	55%	50%	45%	40%	35%

Note 1. Stop positions are determined by the mechanical stoppers at both ends.
Note 2. Minimum bend radius of motor cable is R50.
Note 3. When the stroke is longer than 650mm, resonance of the ball screw may occur depending on the operation conditions (critical speed). In this case, reduce the speed setting on the program by referring to the maximum speeds shown in the table at the left.

Controller SR1-X ▸ 618 TS-X ▸ 592 RDV-X ▸ 606

C10

Origin on the non-motor side is selectable: Lead 20 • 10

Ordering method

C10 – [ ] – [ ] – [ ] – [ ] – [ ]

Model	Lead	Brake	Option	Stroke	Cable length Note 2
	20: 20mm 10: 10mm 5: 5mm	No entry: With no brake BK: With brake	Origin position change: None: Standard / Z: Non-motor side Note 1	150 to 1050 (50mm pitch)	3L: 3.5m 5L: 5m 10L: 10m 3K/5K/10K (Flexible cable)

TSX

Positioner Note 3	Driver: Power-supply voltage / Power capacity	Regenerative unit	LCD monitor	I/O selection	Battery
TS-X	105: 100V/100W or less 205: 200V/100W or less	No entry: None R: With RGT	No entry: None L: With LCD	NP: NPN PN: PNP CC: CC-Link DN: DeviceNet™ EP: EtherNet/IP™ PT: PROFINET GW: No I/O board Note 4	B: With battery (Absolute) N: None (Incremental)

SR1-X 05

Controller	Driver: Power capacity	Usable for CE	Regenerative unit	I/O selection	Battery
	05: 100W or less	No entry: Standard E: CE marking	No entry: None R: With RG1	N: NPN P: PNP CC: CC-Link DN: DeviceNet™ PB: PROFIBUS	B: With battery (Absolute) N: None (Incremental)

RDV-X 2 05 – RBR1

Driver	Power-supply voltage	Driver: Power capacity	Regenerative unit
	2: AC200V	05: 100W or less	

Note 1. If selecting 5mm lead specifications then the origin point cannot be changed to the non-motor side.
Note 2. The robot cable is standard cable (3L/5L/10L), but can be changed to flexible cable. See P.692 for details on robot cable.
Note 3. See P.600 for DIN rail mounting bracket.
Note 4. Select this selection when using the gateway function.

Basic specifications

AC servo motor output (W)		100		
Repeatability Note 1 (mm)		+/-0.01		
Deceleration mechanism		Ball screw ϕ15		
Ball screw lead (mm)		20	10	5
Maximum speed Note 2 (mm/sec)		1000	500	250
Maximum payload (kg)	Horizontal	20	40	60
	Vertical	4	10	20
Rated thrust (N)		84	169	339
Stroke (mm)		150 to 1050 (50mm pitch)		
Overall length (mm)	Horizontal	Stroke+283		
	Vertical	Stroke+313		
Maximum outside dimension of body cross-section (mm)		W104 × H85		
Cable length (m)		Standard: 3.5 / Option: 5, 10		
Degree of cleanliness		CLASS 10 Note 3		
Intake air (Nℓ/min)		30 to 90 Note 4		

Note 1. Positioning repeatability in one direction.
Note 2. When the stroke is longer than 750mm, resonance of the ball screw may occur depending on the operation conditions (critical speed). In this case, reduce the speed setting on the program by referring to the maximum speeds shown in the table below.
Note 3. Per 1cf (0.1μm base), when suction blower is used.
Note 4. The necessary intake amount varies depending on the use conditions and environment.

Allowable overhang Note

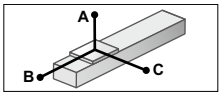

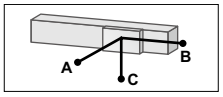

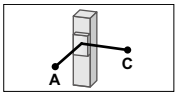

Horizontal installation (Unit: mm)

		A	B	C
Lead 20	5kg	1875	530	510
	10kg	1079	247	242
	20kg	628	106	107
Lead 10	15kg	765	156	164
	30kg	425	62	66
	40kg	350	38	42
Lead 5	30kg	960	63	68
	50kg	565	25	28
	60kg	470	16	17

Wall installation (Unit: mm)

		A	B	C
Lead 20	5kg	496	451	1826
	10kg	218	168	1002
	20kg	78	27	497
Lead 10	10kg	230	170	1036
	20kg	80	29	506
	30kg	30	0	311
Lead 5	10kg	234	170	2716
	20kg	82	29	1206
	30kg	31	0	711

Vertical installation (Unit: mm)

		A	C
Lead 20	1kg	2461	2492
	2kg	1213	1244
	4kg	585	617
Lead 10	4kg	627	658
	8kg	280	312
	10kg	210	242
Lead 5	10kg	213	244
	15kg	119	151
	20kg	72	104

Note. Distance from center of slider top to center of gravity of object being carried at a guide service life of 10,000 km.

Static loading moment

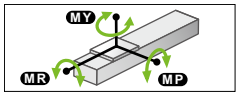

(Unit: N·m)

MY	MP	MR
119	119	105

Controller

Controller	Operation method
SR1-X05 Note RCX320 RCX340	Programming / I/O point trace / Remote command / Operation using RS-232C communication
TS-X105 Note	I/O point trace / Remote command
TS-X205 Note	
RDV-X205-RBR1	Pulse train control

Note. Regenerative unit is required when the models used vertically and with 700mm or larger stroke.

C10

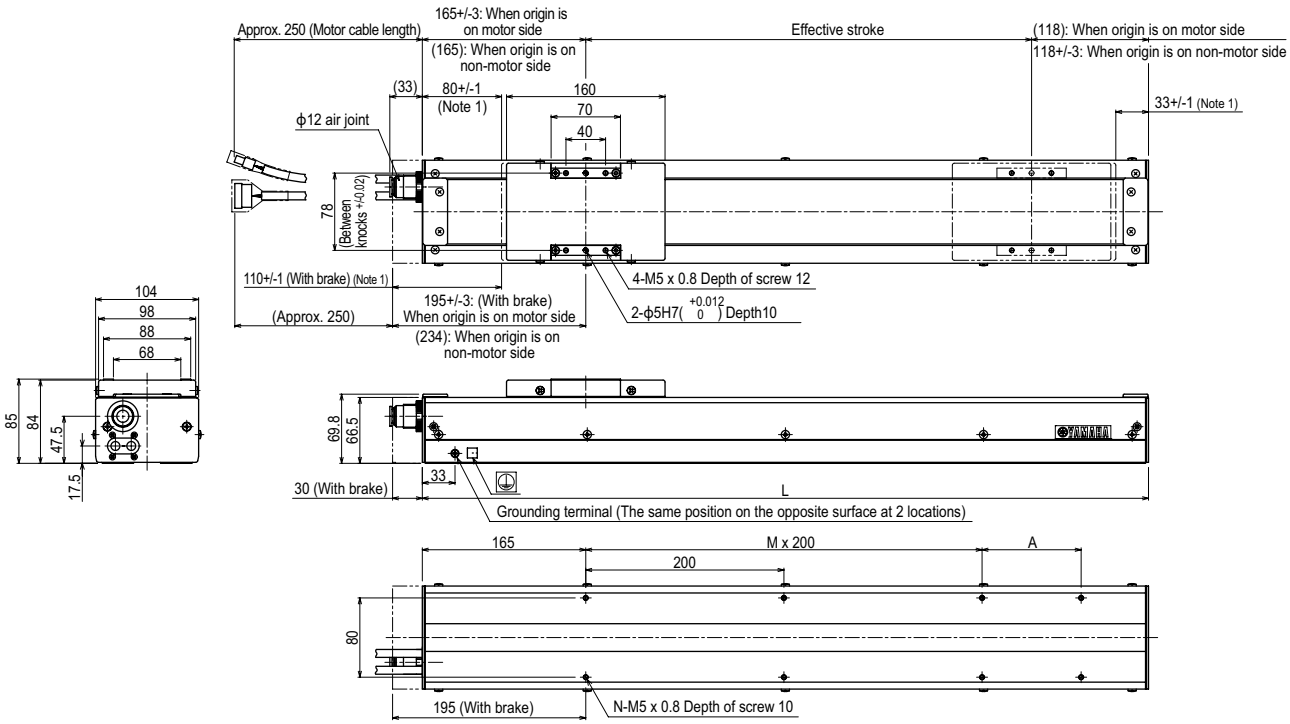

Effective stroke		150	200	250	300	350	400	450	500	550	600	650	700	750	800	850	900	950	1000	1050
L		433	483	533	583	633	683	733	783	833	883	933	983	1033	1083	1133	1183	1233	1283	1333
A		200	50	100	150	200	50	100	150	200	50	100	150	200	50	100	150	200	50	100
M		0	1	1	1	1	2	2	2	2	3	3	3	3	4	4	4	4	5	5
N		4	6	6	6	6	8	8	8	8	10	10	10	10	12	12	12	12	14	14
Weight (kg) Note 3		4.4	5.0	5.5	6.1	6.7	7.3	7.8	8.4	9.0	9.6	10.1	10.7	11.3	11.9	12.4	13.0	13.6	14.2	14.7
Maximum speed Note 4 (mm/sec)	Lead 20	1000												950	950	750	750	600	600	500
	Lead 10	500												475	475	375	375	300	300	250
	Lead 5	250												237	237	187	187	150	150	125
	Speed setting	–												95%	95%	75%	75%	60%	60%	50%

Note 1. Stop positions are determined by the mechanical stoppers at both ends.
Note 2. Minimum bend radius of motor cable is R50.
Note 3. Weight of models with no brake. The weight of brake-attached models is 0.4 kg heavier than the models with no brake shown in the table.

Note 4. When the stroke is longer than 750mm, resonance of the ball screw may occur depending on the operation conditions (critical speed). In this case, reduce the speed setting on the program by referring to the maximum speeds shown in the table at the left.

Controller SR1-X ▸ 618 TS-X ▸ 592 RDV-X ▸ 606

C14

Origin on the non-motor side is selectable

Ordering method

C14 - [ ] - [ ] - [ ] - [ ] - [ ] - **TSX** - [ ] - [ ] - [ ] - [ ] - [ ]

Model	Lead	Brake	Option	Stroke	Cable length Note 1
C14	20: 20mm 10: 10mm 5: 5mm	No entry: With no brake BK: With brake	Origin position change: None: Standard, Z: Non-motor side	150 to 1050 (50mm pitch)	3L: 3.5m 5L: 5m 10L: 10m 3K/5K/10K (Flexible cable)

Positioner Note 2	Driver: Power-supply voltage / Power capacity	Regenerative unit	LCD monitor	I/O selection	Battery
TS-X	105: 100V/100W or less 205: 200V/100W or less	No entry: None R: With RGT	No entry: None L: With LCD	NP: NPN PN: PNP CC: CC-Link DN: DeviceNet™ EP: EtherNet/IP™ PT: PROFINET GW: No I/O board Note 3	B: With battery (Absolute) N: None (Incremental)

SR1-X - **05** - [ ] - [ ] - [ ] - [ ]

Controller	Driver: Power capacity	Usable for CE	Regenerative unit	I/O selection	Battery
	05: 100W or less	No entry: Standard E: CE marking	No entry: None R: With RG1	N: NPN P: PNP CC: CC-Link DN: DeviceNet™ PB: PROFIBUS	B: With battery (Absolute) N: None (Incremental)

RDV-X - **2** - **05** - **RBR1**

Driver	Power-supply voltage	Driver: Power capacity	Regenerative unit
	2: AC200V	05: 100W or less	

Note 1. The robot cable is standard cable (3L/5L/10L), but can be changed to flexible cable. See P.692 for details on robot cable.
Note 2. See P.600 for DIN rail mounting bracket.
Note 3. Select this selection when using the gateway function.

Basic specifications

AC servo motor output (W)		100		
Repeatability Note 1 (mm)		+/-0.01		
Deceleration mechanism		Ball screw ϕ15		
Ball screw lead (mm)		20	10	5
Maximum speed Note 2 (mm/sec)		1000	500	250
Maximum payload (kg)	Horizontal	30	55	80
	Vertical	4	10	20
Rated thrust (N)		84	169	339
Stroke (mm)		150 to 1050 (50mm pitch)		
Overall length (mm)	Horizontal	Stroke+285		
	Vertical	Stroke+315		
Maximum outside dimension of body cross-section (mm)		W136 × H96		
Cable length (m)		Standard: 3.5 / Option: 5, 10		
Degree of cleanliness		CLASS 10 Note 3		
Intake air (Nℓ/min)		30 to 90 Note 4		

Note 1. Positioning repeatability in one direction.
Note 2. When the stroke is longer than 750mm, resonance of the ball screw may occur depending on the operation conditions (critical speed). In this case, reduce the speed setting on the program by referring to the maximum speeds shown in the table below.
Note 3. Per 1cf (0.1μm base), when suction blower is used.
Note 4. The necessary intake amount varies depending on the use conditions and environment.

Allowable overhang Note

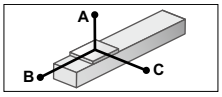

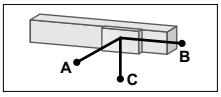

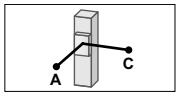

Horizontal installation (Unit: mm)

		A	B	C
Lead 20	5kg	2127	1384	968
	15kg	1177	459	425
	30kg	1247	242	291
Lead 10	20kg	1120	349	353
	40kg	857	179	215
	55kg	932	138	182
Lead 5	50kg	2017	250	335
	60kg	1477	134	192
	80kg	1452	106	157

Wall installation (Unit: mm)

		A	B	C
Lead 20	5kg	1047	968	1553
	15kg	387	264	748
	30kg	206	97	633
Lead 10	20kg	299	180	658
	40kg	127	49	363
	55kg	79	16	296
Lead 5	50kg	233	103	1033
	60kg	75	13	433
	80kg	35	0	242

Vertical installation (Unit: mm)

		A	C
Lead 20	1kg	600	600
	2kg	1200	1200
	4kg	1141	885
Lead 10	4kg	1216	943
	8kg	621	482
	10kg	503	390
Lead 5	10kg	574	445
	15kg	370	287
	20kg	268	208

Note. Distance from center of slider top to center of gravity of object being carried at a guide service life of 10,000 km.

Static loading moment

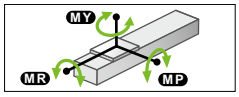

(Unit: N·m)

MY	MP	MR
232	233	204

Controller

Controller	Operation method
SR1-X-05 Note RCX320 RCX340	Programming / I/O point trace / Remote command / Operation using RS-232C communication
TS-X105 Note TS-X205 Note	I/O point trace / Remote command
RDV-X205-RBR1	Pulse train control

Note. Regenerative unit is required when the models used vertically and with 700mm or larger stroke.

C14

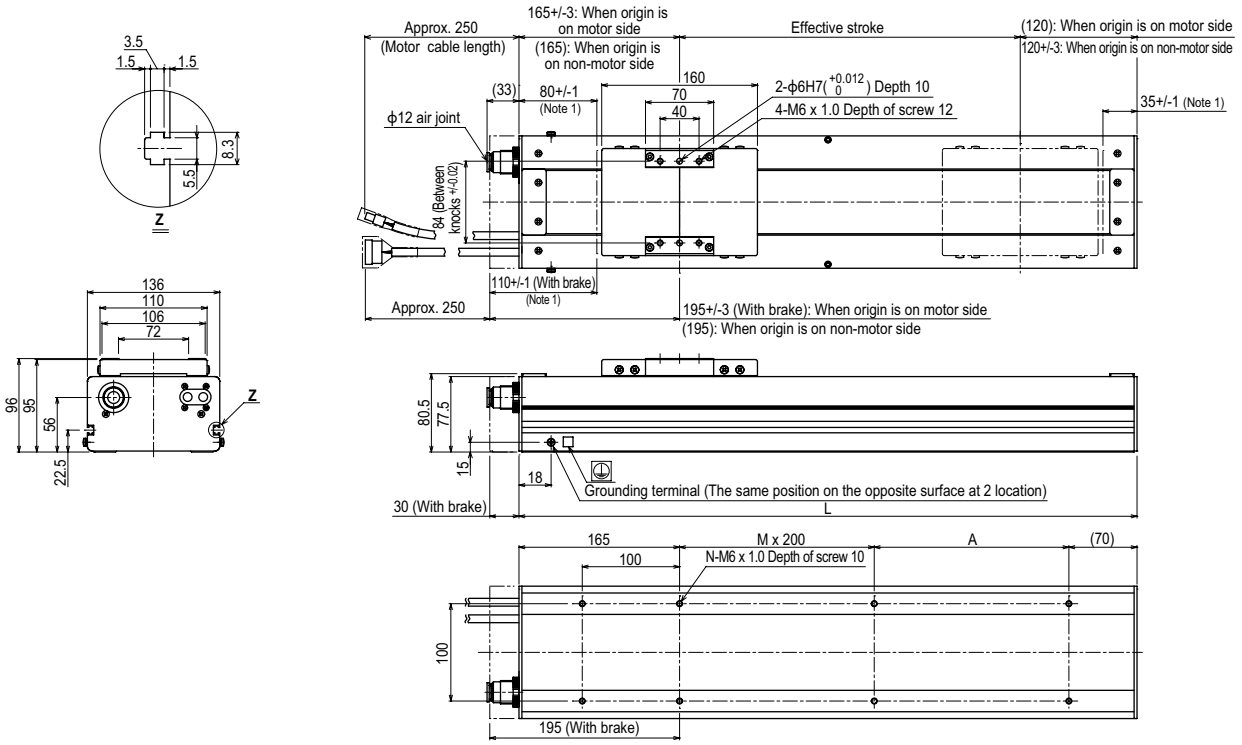

Effective stroke		150	200	250	300	350	400	450	500	550	600	650	700	750	800	850	900	950	1000	1050
L		435	485	535	585	635	685	735	785	835	885	935	985	1035	1085	1135	1185	1235	1285	1335
A		200	50	100	150	200	50	100	150	200	50	100	150	200	50	100	150	200	50	100
M		0	1	1	1	1	2	2	2	2	3	3	3	3	4	4	4	4	5	5
N		6	8	8	8	8	10	10	10	10	12	12	12	12	14	14	14	14	16	16
Weight (kg) Note 3		9.2	9.9	10.5	11.2	11.7	12.4	13.0	13.7	14.3	15.0	15.5	16.2	16.8	17.5	18.1	18.8	19.3	20.0	20.6
Maximum speed Note 4 (mm/sec)	Lead 20	1000												950	950	750	750	600	600	500
	Lead 10	500												475	475	375	375	300	300	250
	Lead 5	250												237	237	187	187	150	150	125
	Speed setting	–												95%	95%	75%	75%	60%	60%	50%

Note 1. Stop positions are determined by the mechanical stoppers at both ends.
Note 2. Minimum bend radius of motor cable is R50.
Note 3. Weight of models with no brake. The weight of brake-attached models is 0.4 kg heavier than the models with no brake shown in the table.

Note 4. When the stroke is longer than 750mm, resonance of the ball screw may occur depending on the operation conditions (critical speed). In this case, reduce the speed setting on the program by referring to the maximum speeds shown in the table at the left.

Controller SR1-X ▸ 618 TS-X ▸ 592 RDV-X ▸ 606

C14H

Origin on the non-motor side is selectable: Lead 20 • 10

Ordering method

C14H - [ ] - [ ] - [ ] - [ ] - [ ]

Model	Lead	Brake	Option	Stroke	Cable length Note 2
	20: 20mm 10: 10mm 5: 5mm	No entry: With no brake BK: With brake	Origin position change: None: Standard / Z: Non-motor side Note 1	150 to 1050 (50mm pitch)	3L: 3.5m 5L: 5m 10L: 10m 3K/5K/10K (Flexible cable)

TSX - [ ] - [ ] - [ ] - [ ] - [ ] - [ ]

Positioner Note 3	Driver: Power-supply voltage / Power capacity	Regenerative unit	LCD monitor	I/O selection	Battery
TS-X	110: 100V/200W 210: 200V/200W	No entry: None R: With RGT	No entry: None L: With LCD	NP: NPN PN: PNP CC: CC-Link DN: DeviceNet™ EP: EtherNet/IP™ PT: PROFINET GW: No I/O board Note 4	B: With battery (Absolute) N: None (Incremental)

SR1-X - **10** - [ ] - [ ] - [ ] - [ ]

Controller	Driver: Power capacity	Usable for CE	Regenerative unit	I/O selection	Battery
	10: 200W	No entry: Standard E: CE marking	No entry: None R: With RG1	N: NPN P: PNP CC: CC-Link DN: DeviceNet™ PB: PROFIBUS	B: With battery (Absolute) N: None (Incremental)

RDV-X - **2** - **10** - **RBR1**

Driver	Power-supply voltage	Driver: Power capacity	Regenerative unit
	2: AC200V	10: 200W or less	

Note 1. If selecting 5mm lead specifications then the origin point cannot be changed to the non-motor side.
Note 2. The robot cable is standard cable (3L/5L/10L), but can be changed to flexible cable. See P.692 for details on robot cable.
Note 3. See P.600 for DIN rail mounting bracket.
Note 4. Select this selection when using the gateway function.

Basic specifications

AC servo motor output (W)		200		
Repeatability Note 1 (mm)		+/-0.01		
Deceleration mechanism		Ball screw ϕ15		
Ball screw lead (mm)		20	10	5
Maximum speed Note 2 (mm/sec)		1000	500	250
Maximum payload (kg)	Horizontal	40	80	100
	Vertical	8	20	30
Rated thrust (N)		170	341	683
Stroke (mm)		150 to 1050 (50mm pitch)		
Overall length (mm)	Horizontal	Stroke+349		
	Vertical	Stroke+379		
Maximum outside dimension of body cross-section (mm)		W136 × H96		
Cable length (m)		Standard: 3.5 / Option: 5, 10		
Degree of cleanliness		CLASS 10 Note 3		
Intake air (Nℓ/min)		30 to 90 Note 4		

Note 1. Positioning repeatability in one direction.
Note 2. When the stroke is longer than 750mm, resonance of the ball screw may occur depending on the operation conditions (critical speed). In this case, reduce the speed setting on the program by referring to the maximum speeds shown in the table below.
Note 3. Per 1cf (0.1μm base), when suction blower is used.
Note 4. The necessary intake amount varies depending on the use conditions and environment.

Allowable overhang Note

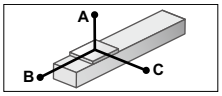

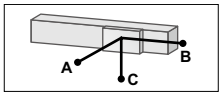

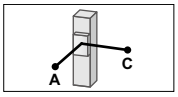

Horizontal installation (Unit: mm)

		A	B	C
Lead 20	10kg	2247	1675	958
	20kg	1397	855	528
	40kg	1037	445	318
Lead 10	30kg	1937	583	478
	50kg	1637	364	323
	80kg	1717	242	235
Lead 5	60kg	2443	311	313
	80kg	2193	242	250
	100kg	2000	202	213

Wall installation (Unit: mm)

		A	B	C
Lead 20	10kg	987	1210	1678
	20kg	497	548	958
	40kg	247	217	598
Lead 10	30kg	402	328	1238
	50kg	227	152	878
	80kg	119	74	678
Lead 5	60kg	197	108	1308
	80kg	127	53	1008
	100kg	85	20	788

Vertical installation (Unit: mm)

		A	C
Lead 20	4kg	2400	2008
	6kg	1687	1358
	8kg	1287	1033
Lead 10	10kg	1347	1088
	15kg	887	718
	20kg	657	538
Lead 5	20kg	747	608
	25kg	663	484
	30kg	491	396

Note. Distance from center of slider top to center of gravity of object being carried at a guide service life of 10,000 km.

Static loading moment

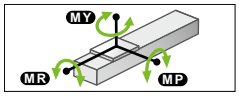

(Unit: N·m)

MY	MP	MR
293	294	258

Controller

Controller	Operation method
SR1-X10 Note RCX320 RCX340	Programming / I/O point trace / Remote command / Operation using RS-232C communication
TS-X110 Note TS-X210 Note	I/O point trace / Remote command
RDV-X210-RBR1	Pulse train control

Note. Regenerative unit is required when used vertically.

C14H

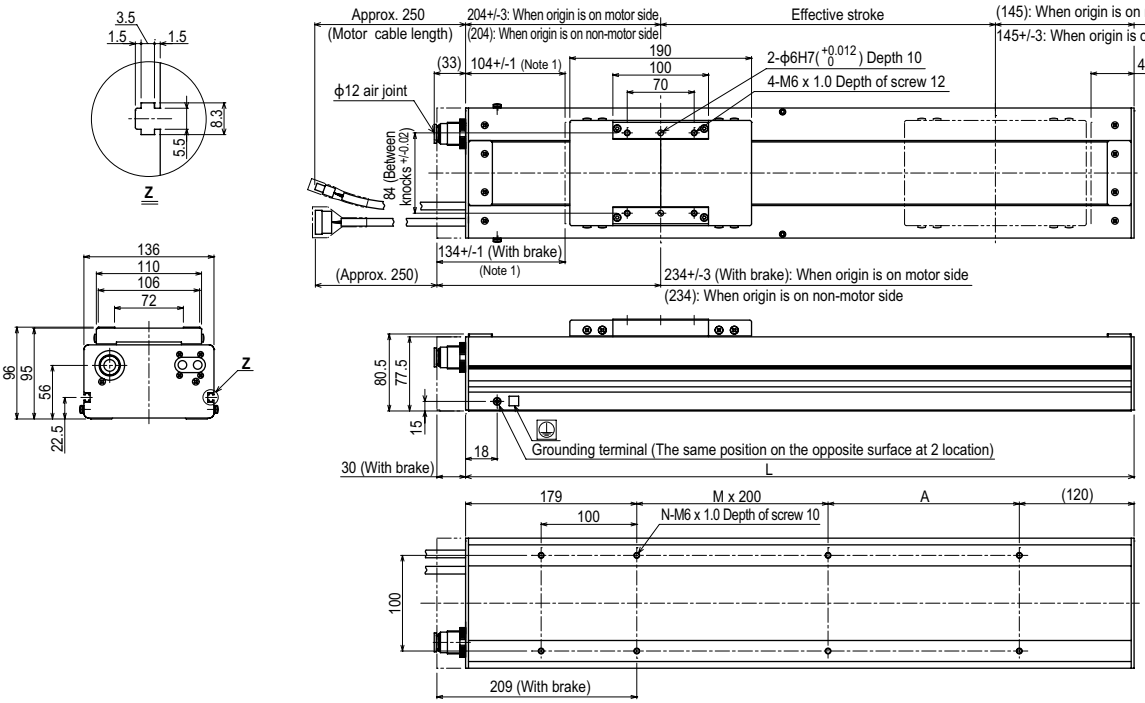

Effective stroke		150	200	250	300	350	400	450	500	550	600	650	700	750	800	850	900	950	1000	1050
L		499	549	599	649	699	749	799	849	899	949	999	1049	1099	1149	1199	1249	1299	1349	1399
A		200	50	100	150	200	50	100	150	200	50	100	150	200	50	100	150	200	50	100
M		0	1	1	1	1	2	2	2	2	3	3	3	3	4	4	4	4	5	5
N		6	8	8	8	8	10	10	10	10	12	12	12	12	14	14	14	14	16	16
Weight (kg) Note 3		10.7	11.4	12.0	12.7	13.2	13.9	14.5	15.2	15.8	16.5	17.0	17.7	18.3	19.0	19.6	20.3	20.8	21.5	22.1
Maximum speed Note 4 (mm/sec)	Lead 20	1000												950	950	750	750	600	600	500
	Lead 10	500												475	475	375	375	300	300	250
	Lead 5	250												237	237	187	187	150	150	125
	Speed setting	–												95%	95%	75%	75%	60%	60%	50%

Note 1. Stop positions are determined by the mechanical stoppers at both ends.
Note 2. Minimum bend radius of motor cable is R50.
Note 3. Weight of models with no brake. The weight of brake-attached models is 0.4 kg heavier than the models with no brake shown in the table.
Note 4. When the stroke is longer than 750mm, resonance of the ball screw may occur depending on the operation conditions (critical speed). In this case, reduce the speed setting on the program by referring to the maximum speeds shown in the table at the left.

C17

Origin on the non-motor side is selectable

Ordering method

C17 - [ ] - [ ] - [ ] - [ ] - [ ]

Model	Lead	Brake	Option	Stroke	Cable length Note 1
	20: 20mm 10: 10mm	No entry: With no brake BK: With brake	Origin position change: None: Standard / Z: Non-motor side	200 to 1250 (50mm pitch)	3L: 3.5m 5L: 5m 10L: 10m 3K/5K/10K (Flexible cable)

TSX - **220** - [ ] - [ ] - [ ] - [ ]

Positioner Note 2	Driver: Power-supply voltage / Power capacity	Regenerative unit	LCD monitor	I/O selection	Battery
TS-X	220: 200V/400 to 600W	No entry: None R: With RGT	No entry: None L: With LCD	NP: NPN PN: PNP CC: CC-Link DN: DeviceNet™ EP: EtherNet/IP™ PT: PROFINET GW: No I/O board Note 3	B: With battery (Absolute) N: None (Incremental)

SR1-X - **20** - [ ] - [ ] - [ ] - [ ]

Controller	Driver: Power capacity	Usable for CE	Regenerative unit	I/O selection	Battery
	20: 400 to 600W	No entry: Standard E: CE marking	No entry: None R: With RG1	N: NPN P: PNP CC: CC-Link DN: DeviceNet™ PB: PROFIBUS	B: With battery (Absolute) N: None (Incremental)

RDV-X - **2** - **20** - [ ]

Driver	Power-supply voltage	Driver: Power capacity	Regenerative unit
	2: AC200V	20: 400W or less	RBR1 (Horizontal) RBR2 (Vertical)

Note 1. The robot cable is standard cable (3L/5L/10L), but can be changed to flexible cable. See P.692 for details on robot cable.
Note 2. See P.600 for DIN rail mounting bracket.
Note 3. Select this selection when using the gateway function.

Basic specifications

AC servo motor output (W)		400	
Repeatability Note 1 (mm)		+/-0.01	
Deceleration mechanism		Ball screw ϕ20	
Ball screw lead (mm)		20	10
Maximum speed Note 2 (mm/sec)		1000	600
Maximum payload (kg)	Horizontal	80	120
	Vertical	15	35
Rated thrust (N)		339	678
Stroke (mm)		200 to 1250 (50mm pitch)	
Overall length (mm)	Horizontal	Stroke+395	
	Vertical	Stroke+425	
Maximum outside dimension of body cross-section (mm)		W168 × H114	
Cable length (m)		Standard: 3.5 / OP: 5, 10	
Degree of cleanliness		CLASS 10 Note 3	
Intake air (Nℓ/min)		30 to 90 Note 4	

Note 1. Positioning repeatability in one direction.
Note 2. When the stroke is longer than 950mm, resonance of the ball screw may occur depending on the operation conditions (critical speed). In this case, reduce the speed setting on the program by referring to the maximum speeds shown in the table below.
Note 3. Per 1cf (0.1μm base), when suction blower is used.
Note 4. The necessary intake amount varies depending on the use conditions and environment.

Allowable overhang Note

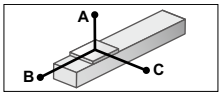

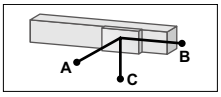

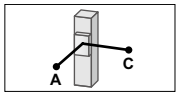

Horizontal installation (Unit: mm)

		A	B	C
Lead 20	30kg	2660	871	1040
	50kg	1911	508	615
	80kg	1541	303	377
Lead 10	60kg	2443	418	580
	100kg	2000	237	330
	120kg	1841	192	268

Wall installation (Unit: mm)

		A	B	C
Lead 20	30kg	1017	789	2576
	50kg	583	426	1808
	80kg	338	221	1380
Lead 10	60kg	525	336	2443
	100kg	271	155	2000
	120kg	207	109	1841

Vertical installation (Unit: mm)

		A	C
Lead 20	5kg	3000	3000
	10kg	2443	2443
	15kg	1633	1633
Lead 10	15kg	1728	1728
	25kg	1013	1013
	35kg	707	707

Note. Distance from center of slider top to center of gravity of object being carried at a guide service life of 10,000 km.

Static loading moment

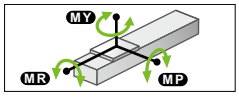

(Unit: N·m)

MY	MP	MR
1032	1034	908

Controller

Controller	Operation method
SR1-X20 Note RCX320, RCX340	Programming / I/O point trace / Remote command / Operation using RS-232C communication
TS-X220 Note	I/O point trace / Remote command
RDV-X220-RBR1 (Horizontal) RDV-X220-RBR2 (Vertical)	Pulse train control

Note. [The following arrangements require a regeneration unit.]
• Using in the upright position.

C17

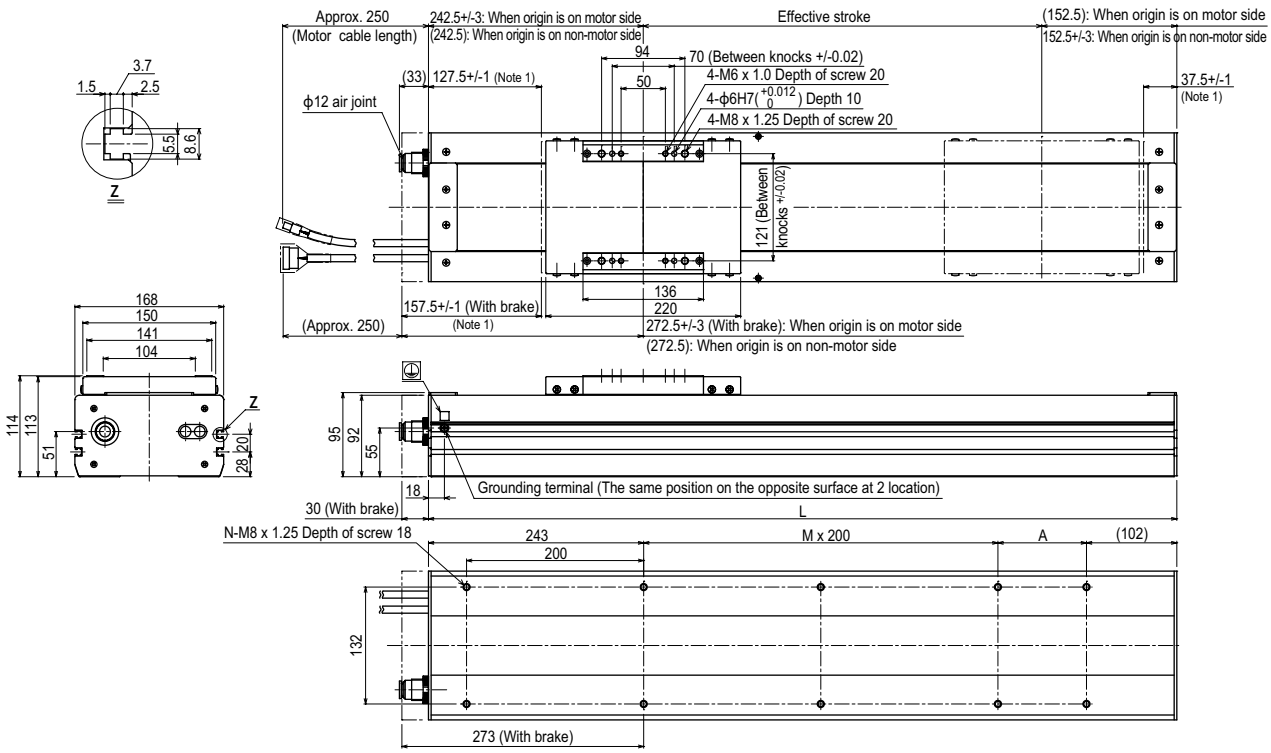

Effective stroke		200	250	300	350	400	450	500	550	600	650	700	750	800	850	900	950	1000	1050	1100	1150	1200	1250
L		595	645	695	745	795	845	895	945	995	1045	1095	1145	1195	1245	1295	1345	1395	1445	1495	1545	1595	1645
A		50	100	150	200	50	100	150	200	50	100	150	200	50	100	150	200	50	100	150	200	50	100
M		1	1	1	1	2	2	2	2	3	3	3	3	4	4	4	4	5	5	5	5	6	6
N		8	8	8	8	10	10	10	10	12	12	12	12	14	14	14	14	16	16	16	16	18	18
Weight (kg) Note 3		15.0	16.0	17.0	17.9	18.9	19.8	20.8	21.7	22.7	23.6	24.6	25.5	26.5	27.4	28.4	29.3	30.3	31.2	32.2	33.1	34.1	35.0
Maximum speed Note 4 (mm/sec)	Lead 20	1000															800	800	700	700	600	600	500
	Lead 10	500															400	400	350	350	300	300	250
	Speed setting	–															80%	80%	70%	70%	60%	60%	50%

Note 1. Stop positions are determined by the mechanical stoppers at both ends.
Note 2. Minimum bend radius of motor cable is R50.
Note 3. Weight of models with no brake. The weight of brake-attached models is 1.5 kg heavier than the models with no brake shown in the table.

Note 4. When the stroke is longer than 950mm, resonance of the ball screw may occur depending on the operation conditions (critical speed). In this case, reduce the speed setting on the program by referring to the maximum speeds shown in the table at the left.

Controller SR1-X ▸ 618 TS-X ▸ 592 RDV-X ▸ 606

C17L

Origin on the non-motor side is selectable

Note. Built-to-order product. Contact us for the delivery period.

Ordering method

C17L - 50 - [ ] - [ ] - [ ] - [ ]

Model	Lead	Brake	Option	Stroke	Cable length Note 1
		No entry: With no brake BK: With brake	Origin position change: None: Standard Z: Non-motor side	1150 to 2050 (100mm pitch)	3L: 3.5m 5L: 5m 10L: 10m 3K/5K/10K (Flexible cable)

TSX - 220 - R - [ ] - [ ] - [ ]

Positioner Note 2	Driver: Power-supply voltage / Power capacity Note 3	Regenerative unit	LCD monitor	I/O selection	Battery
TS-X	220: 200V/400 to 600W	R: With RGT	No entry: None L: With LCD	NP: NPN PN: PNP CC: CC-Link DN: DeviceNet™ EP: EtherNet/IP™ PT: PROFINET GW: No I/O board Note 4	B: With battery (Absolute) N: None (Incremental)

SR1-X - 20 - [ ] - R - [ ] - [ ]

Controller	Driver: Power capacity Note 3	Usable for CE	Regenerative unit	I/O selection	Battery
	20: 400 to 600W	No entry: Standard E: CE marking	R: With RG1	N: NPN P: PNP CC: CC-Link DN: DeviceNet™ PB: PROFIBUS	B: With battery (Absolute) N: None (Incremental)

RDV-X - 2 - 20 - [ ]

Driver	Power-supply voltage	Driver: Power capacity Note 3	Regenerative unit
	2: AC200V	20: 400W or less	RBR1 (Horizontal) RBR2 (Vertical)

Note 1. The robot cable is standard cable (3L/5L/10L), but can be changed to flexible cable. See P.692 for details on robot cable.
Note 2. See P.600 for DIN rail mounting bracket.
Note 3. Acceleration / deceleration is different depending the Positioner or Controller or Driver.
Note 4. Select this selection when using the gateway function.

Basic specifications

AC servo motor output (W)		600
Repeatability Note 1 (mm)		+/-0.02
Deceleration mechanism		Ball screw ϕ25
Ball screw lead (mm)		50
Maximum speed Note 2 (mm/sec)		1000
Maximum payload (kg)	Horizontal	50
	Vertical	10
Rated thrust (N)		204
Stroke (mm)		1150 to 2050 (100 pitch)
Overall length (mm)	Horizontal	Stroke+485
	Vertical	Stroke+515
Maximum outside dimension of body cross-section (mm)		W168 × H114
Cable length (m)		Standard: 3.5 / Option: 5, 10
Degree of cleanliness		CLASS 10 Note 3
Intake air (Nℓ/min)		30 to 90 Note 4

Note 1. Positioning repeatability in one direction.
Note 2. When the stroke is longer than 1850mm, resonance of the ball screw may occur depending on the operation conditions (critical speed). In this case, reduce the speed setting on the program by referring to the maximum speeds shown in the table below.
Note 3. Per 1cf (0.1μm base), when suction blower is used.
Note 4. The necessary intake amount varies depending on the use conditions and environment.

Allowable overhang Note

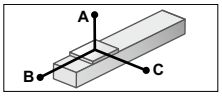

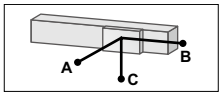

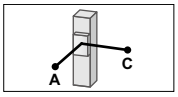

Horizontal installation (Unit: mm)

		A	B	C
Lead 50	10kg	4000	2687	3327
	30kg	3045	872	929
	50kg	2602	509	714

Wall installation (Unit: mm)

		A	B	C
Lead 50	10kg	3436	2605	4000
	30kg	1169	790	3045
	50kg	666	427	2602

Vertical installation (Unit: mm)

		A	C
Lead 50	2kg	1200	1200
	5kg	3000	3000
	10kg	2579	2579

Note. Distance from center of slider top to center of gravity of object being carried at a guide service life of 10,000 km.

Static loading moment

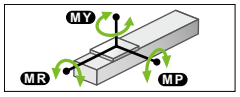

(Unit: N·m)

MY	MP	MR
1032	1034	908

Controller

Controller	Operation method
SR1-X20-R RCX320 RCX340	Programming / I/O point trace / Remote command / Operation using RS-232C communication
TS-X220-R	I/O point trace / Remote command
RDV-X220-RBR1 (Horizontal) RDV-X220-RBR2 (Vertical)	Pulse train control

C17L

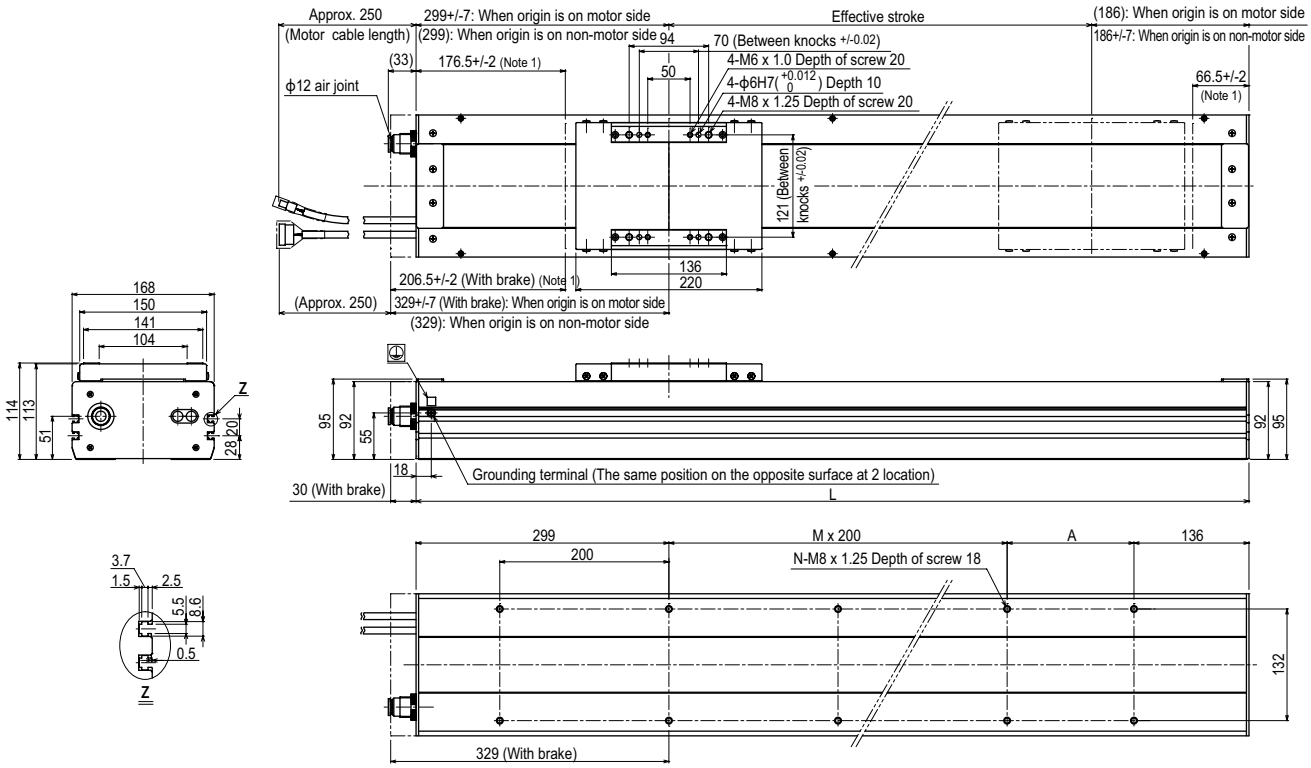

Effective stroke		1150	1250	1350	1450	1550	1650	1750	1850	1950	2050
L		1635	1735	1835	1935	2035	2135	2235	2335	2435	2535
A		200	100	200	100	200	100	200	100	200	100
M		5	6	6	7	7	8	8	9	9	10
N		16	18	18	20	20	22	22	24	24	26
Weight (kg) Note 3		39.1	41.2	43.2	45.2	47.3	49.3	51.3	53.4	55.4	57.4
Maximum speed (mm/sec) Note 4	Lead 50	1000							900	800	
	Speed setting	–							90%	80%	

Note 1. Stop positions are determined by the mechanical stoppers at both ends.
Note 2. Minimum bend radius of motor cable is R50.
Note 3. Weight of models with no brake. The weight of brake-attached models is 1.5 kg heavier than the models with no brake shown in the table.
Note 4. When the stroke is longer than 1850mm, resonance of the ball screw may occur depending on the operation conditions (critical speed). In this case, reduce the speed setting on the program by referring to the maximum speeds shown in the table at the left.

Controller SR1-X ▸ 618 TS-X ▸ 592 RDV-X ▸ 606

C20

Origin on the non-motor side is selectable

Ordering method

C20 - [ ] - [ ] - [ ] - [ ] - [ ]

Model	Lead Note 1	Brake	Option		Stroke	Cable length Note 2
	20: 20mm 10: 10mm	No entry: With no brake BK: With brake	Origin position change	None: Standard Z: Non-motor side	200 to 1250 (50mm pitch)	3L: 3.5m 5L: 5m 10L: 10m 3K/5K/10K (Flexible cable)

TSX - **220** - [ ] - [ ] - [ ] - [ ]

Positioner Note 3	Driver: Power-supply voltage / Power capacity Note 4	Regenerative unit	LCD monitor	I/O selection	Battery
TS-X	220: 200V/400 to 600W	No entry: None R: With RGT	No entry: None L: With LCD	NP: NPN PN: PNP CC: CC-Link DN: DeviceNet™ EP: EtherNet/IP™ PT: PROFINET GW: No I/O board Note 5	B: With battery (Absolute) N: None (Incremental)

SR1-X - **20** - [ ] - [ ] - [ ] - [ ]

Controller	Driver: Power capacity Note 4	Usable for CE	Regenerative unit	I/O selection	Battery
	20: 400 to 600W	No entry: Standard E: CE marking	No entry: None R: With RG1	N: NPN P: PNP CC: CC-Link DN: DeviceNet™ PB: PROFIBUS	B: With battery (Absolute) N: None (Incremental)

RDV-X - **2** - **20** - [ ]

Driver	Power-supply voltage	Driver: Power capacity Note 4	Regenerative unit
	2: AC200V	20: 400W or less	RBR1 (Horizontal) RBR2 (Vertical)

Note 1. Only the model with specifications with brake (vertical specifications) can select a lead of 10mm.
Note 2. The robot cable is standard cable (3L/5L/10L), but can be changed to flexible cable. See P.692 for details on robot cable.
Note 3. See P.600 for DIN rail mounting bracket.
Note 4. Acceleration / deceleration is different depending the Positioner or Controller or Driver.
Note 5. Select this selection when using the gateway function.

Basic specifications

AC servo motor output (W)		600	
Repeatability Note 1 (mm)		+/-0.01	
Deceleration mechanism		Ball screw ϕ20	
Ball screw lead (mm)		20	10
Maximum speed Note 2 (mm/sec)		1000	500
Maximum payload (kg)	Horizontal	120	–
	Vertical	25	45
Rated thrust (N)		510	1020
Stroke (mm)		200 to 1250 (50mm pitch)	
Overall length (mm)	Horizontal	Stroke+441	
	Vertical	Stroke+471	
Maximum outside dimension of body cross-section (mm)		W202 × H117	
Cable length (m)		Standard: 3.5 / Option: 5, 10	
Degree of cleanliness		CLASS 10 Note 3	
Intake air (Nℓ/min)		30 to 90 Note 4	

Note 1. Positioning repeatability in one direction.
Note 2. When the stroke is longer than 950mm, resonance of the ball screw may occur depending on the operation conditions (critical speed). In this case, reduce the speed setting on the program by referring to the maximum speeds shown in the table below.
Note 3. Per 1cf (0.1μm base), when suction blower is used.
Note 4. The necessary intake amount varies depending on the use conditions and environment.

Allowable overhang Note

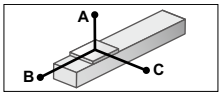

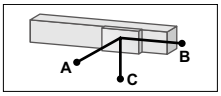

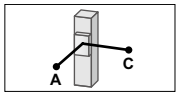

Horizontal installation (Unit: mm)

		A	B	C
Lead 20	50kg	2602	869	1145
	80kg	2193	528	720
	120kg	1841	339	505

Wall installation (Unit: mm)

		A	B	C
Lead 20	50kg	1144	798	2602
	80kg	717	456	2193
	120kg	466	267	1841

Vertical installation (Unit: mm)

		A	C
Lead 20	15kg	2711	2711
	20kg	2045	2045
	25kg	1647	1647
Lead 10	20kg	2182	2182
	30kg	1437	1437
	45kg	939	939

Note. Distance from center of slider top to center of gravity of object being carried at a guide service life of 10,000 km.

Static loading moment

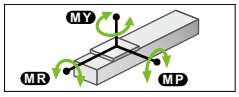

(Unit: N·m)

MY	MP	MR
1101	1103	968

Controller

Controller	Operation method
SR1-X20 Note RCX320, RCX340	Programming / I/O point trace / Remote command / Operation using RS-232C communication
TS-X220 Note	I/O point trace / Remote command
RDV-X220-RBR1 (Horizontal) RDV-X220-RBR2 (Vertical)	Pulse train control

Note. [The following arrangements require a regeneration unit.]
• Using in the upright position.

C20

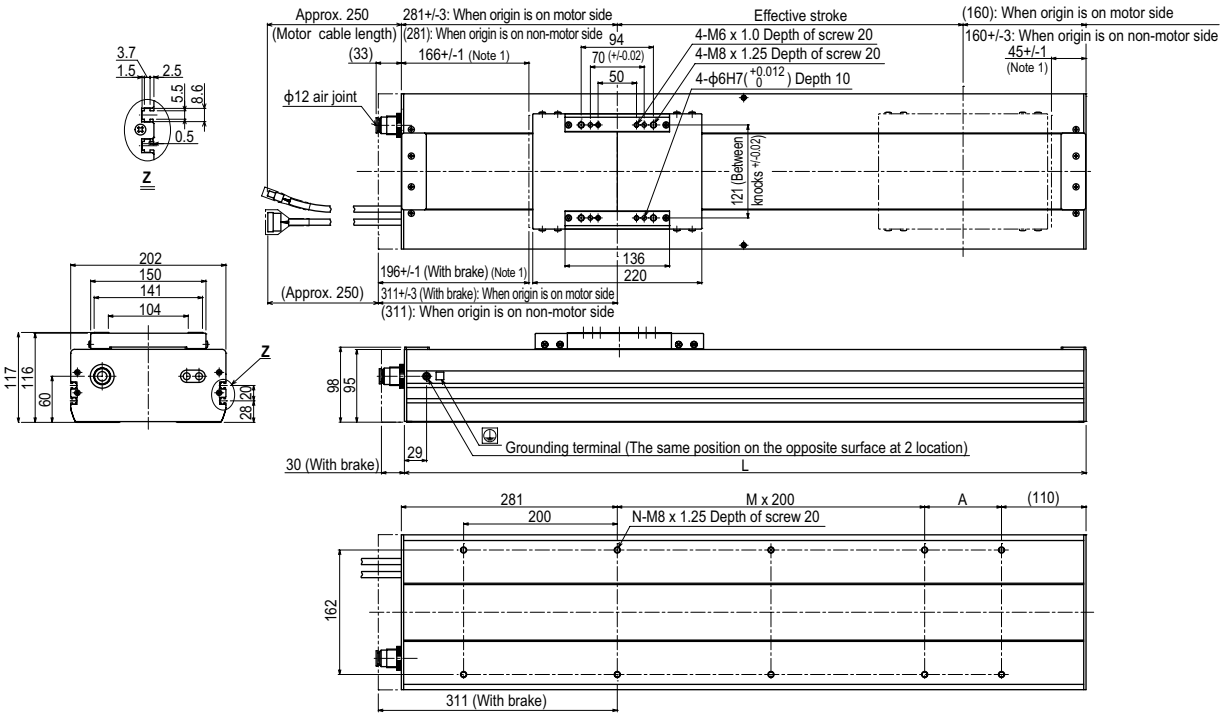

Effective stroke		200	250	300	350	400	450	500	550	600	650	700	750	800	850	900	950	1000	1050	1100	1150	1200	1250
L		641	691	741	791	841	891	941	991	1041	1091	1141	1191	1241	1291	1341	1391	1441	1491	1541	1591	1641	1691
A		50	100	150	200	50	100	150	200	50	100	150	200	50	100	150	200	50	100	150	200	50	100
M		1	1	1	1	2	2	2	2	3	3	3	3	4	4	4	4	5	5	5	5	6	6
N		8	8	8	8	10	10	10	10	12	12	12	12	14	14	14	14	16	16	16	16	18	18
Weight (kg) Note 3		25.0	26.0	27.0	28.0	29.0	30.0	31.0	32.0	33.0	34.0	35.0	36.0	37.0	38.0	39.0	40.0	41.0	42.0	43.0	44.0	45.0	46.0
Maximum speed Note 4 (mm/sec)	Lead 20	1000															800	800	700	700	600	600	500
	Lead 10	500															400	400	350	350	300	300	250
	Speed setting	–															80%	80%	70%	70%	60%	60%	50%

Note 1. Stop positions are determined by the mechanical stoppers at both ends.
Note 2. Minimum bend radius of motor cable is R50.
Note 3. Weight of models with no brake. The weight of brake-attached models is 2.0 kg heavier than the models with no brake shown in the table.

Note 4. When the stroke is longer than 950mm, resonance of the ball screw may occur depending on the operation conditions (critical speed). In this case, reduce the speed setting on the program by referring to the maximum speeds shown in the table at the left.

Controller SR1-X ▸ 618 TS-X ▸ 592 RDV-X ▸ 606

SXYxC 2 axes

Clean type Cable duct

Ordering method

SXYxC - D -					- RCX320-2 -					
Model	Cable	Combination	X axis stroke	Y axis stroke	Cable length	Controller / Number of controllable axes	Safety standard	Option A (OP.A)	Option B (OP.B)	Vision System	Absolute battery
	D: Cable duct	T1 T3	15 to 105cm	15 to 65cm	3L: 3.5m 5L: 5m 10L: 10m						

Specify various controller setting items. RCX320 ▶ P.626

Basic specifications

	X axis	Y axis
Axis construction Note 1	C14H	C14
AC servo motor output (W)	200	100
Repeatability Note 2 (mm)	+/-0.01	+/-0.01
Drive system	Ball screw ϕ15	Ball screw ϕ15
Ball screw lead Note 3 (Deceleration ratio) (mm)	20	20
Maximum speed Note 4 (mm/sec)	1000	1000
Moving range (mm)	150 to 1050	150 to 650
Robot cable length (m)	Standard: 3.5 Option: 5, 10	
Degree of cleanliness	CLASS 10 Note 5	
Intake air (Nℓ/min)	60 Note 6	

Note 1. Use caution that the frame machining (installation holes, tap holes) differs from single-axis robots'.
Note 2. Positioning repeatability in one direction.
Note 3. Leads not listed in the catalog are also available. Contact us for details.
Note 4. When the X-axis stroke is longer than 850mm, resonance of the ball screw may occur depending on the operation conditions (critical speed). In this case, reduce the speed setting on the program by referring to the maximum speeds shown in the table below.
Note 5. Per 1cf (0.1μm base), when suction blower is used.
Note 6. The necessary intake amount varies depending on the use conditions and environment.

Maximum payload (kg)

Y stroke (mm)	XY 2 axes
150	20
250	17
350	15
450	13
550	11
650	9

Controller

Controller	Operation method
RCX320	Programming / I/O point trace / Remote command / Operation using RS-232C communication

SXYxC 2 axes T1

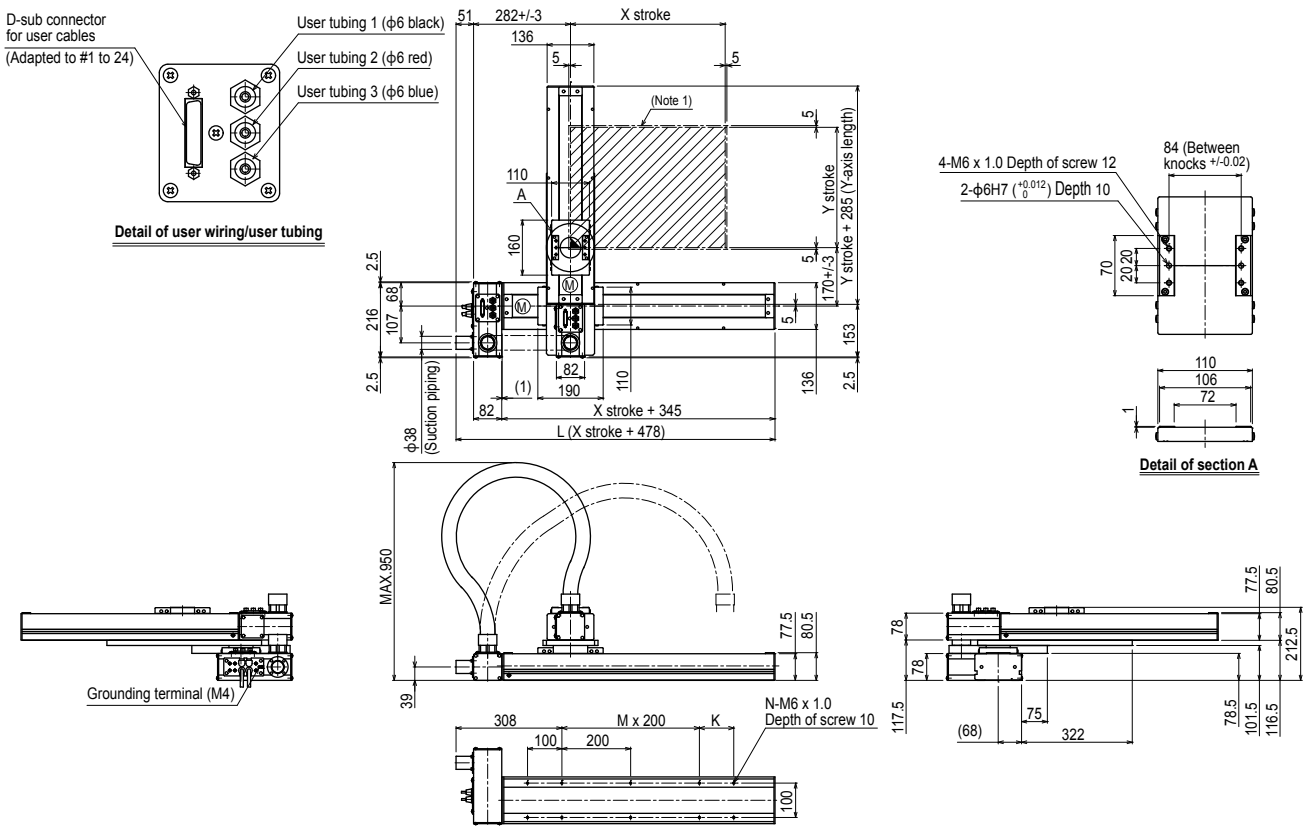

X stroke	150	250	350	450	550	650	750	850	950	1050
L	628	728	828	928	1028	1128	1228	1328	1428	1528
K	200	100	200	100	200	100	200	100	200	100
M	0	1	1	2	2	3	3	4	4	5
N	6	8	8	10	10	12	12	14	14	16

Y stroke	150	250	350	450	550	650
Maximum speed for each stroke (mm/sec) Note 2 — X axis	1000				800	650	550
Maximum speed for each stroke (mm/sec) Note 2 — Speed setting	–				80%	65%	55%

Note 1. The moving range when returning to origin and the stop position when stopping by mechanical stopper.

Note 2. When the X-axis stroke is longer than 850mm, resonance of the ball screw may occur depending on the operation conditions (critical speed). In this case, reduce the speed setting on the program by referring to the maximum speeds shown in the table at the left.

SXYxC 2 axes T3

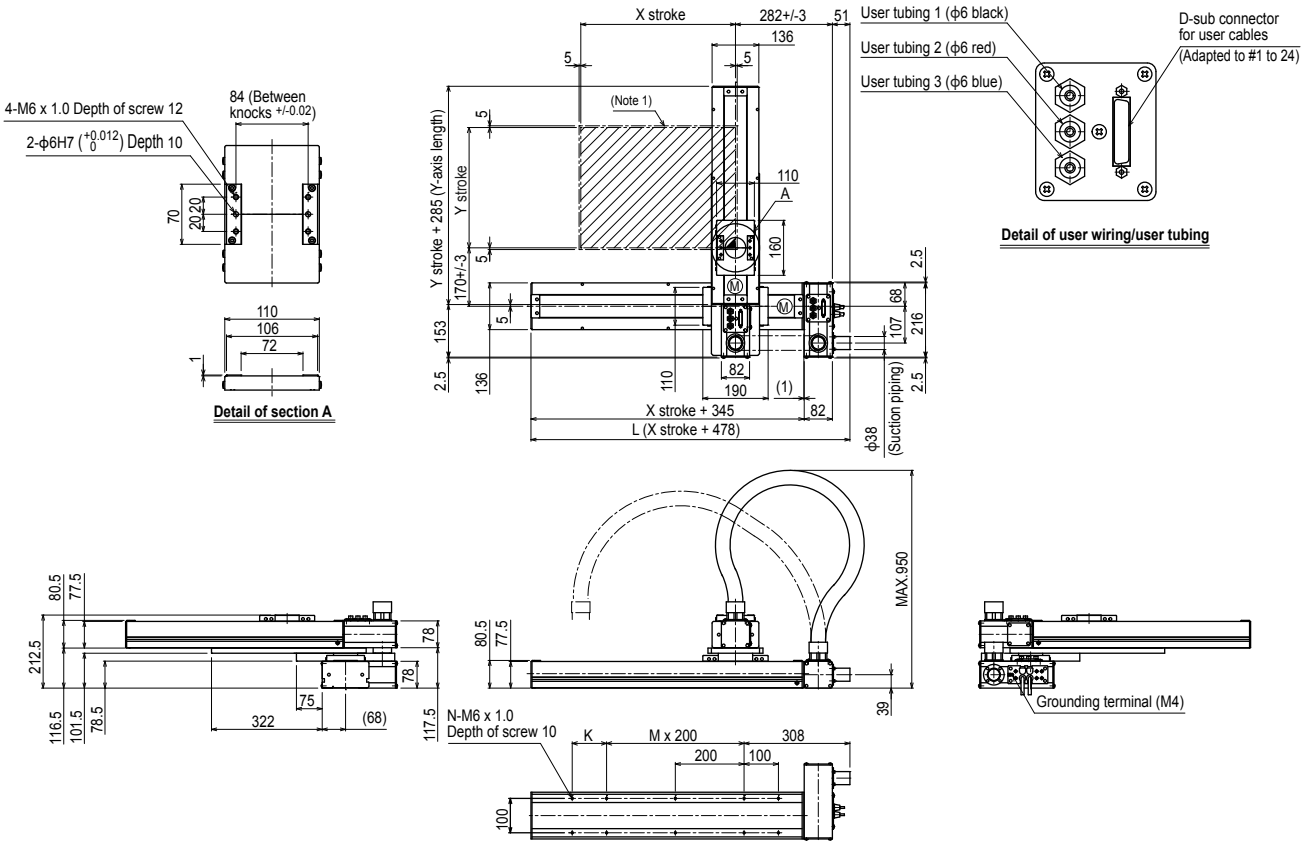

X stroke	150	250	350	450	550	650	750	850	950	1050
L	628	728	828	928	1028	1128	1228	1328	1428	1528
K	200	100	200	100	200	100	200	100	200	100
M	0	1	1	2	2	3	3	4	4	5
N	6	8	8	10	10	12	12	14	14	16

Y stroke	150	250	350	450	550	650

Maximum speed for each stroke (mm/sec) Note 2					
X axis	1000	800	650	550
Speed setting	–	80%	65%	55%

Note 1. The moving range when returning to origin and the stop position when stopping by mechanical stopper.

Note 2. When the X-axis stroke is longer than 850mm, resonance of the ball screw may occur depending on the operation conditions (critical speed). In this case, reduce the speed setting on the program by referring to the maximum speeds shown in the table at the left.

SXYxC

3 axes / ZSC

● Clean type ● Cable duct ● Z-axis shaft vertical type

Ordering method

SXYxC -	D	-	□	-	□	-	□	-	15	-	□	-	RCX340-3	-	□	-	□	-	□	-	□	-	□	-	□
Model	Cable		Combination		X axis stroke		Y axis stroke		ZR axis		Z axis stroke		Cable length		Controller / Number of controllable axes		Safety standard		Option A (OP.A)		Option B (OP.B)		Option C (OP.C)		Option D (OP.D)		Option E (OP.E)		Absolute battery
	D: Cable duct		T1 T3		15 to 105cm		15 to 65cm		ZSC12 ZSC6				3L: 3.5m 5L: 5m 10L: 10m																

Specify various controller setting items. RCX340 ▶ P.636

Basic specifications

	X axis	Y axis	Z axis: ZSC12	Z axis: ZSC6
Axis construction Note 1	C14H	C14	–	
AC servo motor output (W)	200	100	60	
Repeatability Note 2 (mm)	+/-0.01	+/-0.01	+/-0.02	
Drive system	Ball screw ϕ15	Ball screw ϕ15	Ball screw ϕ12	
Ball screw lead Note 3 (Deceleration ratio) (mm)	20	20	12	6
Maximum speed Note 4 (mm/sec)	1000	1000	1000	500
Moving range (mm)	150 to 1050	150 to 650	150	
Robot cable length (m)	Standard: 3.5 Option: 5, 10			
Degree of cleanliness	CLASS 10 Note 5			
Intake air (Nℓ/min)	90 Note 6			

Note 1. Use caution that the frame machining (installation holes, tap holes) differs from single-axis robots'.
Note 2. Positioning repeatability in one direction.
Note 3. Leads not listed in the catalog are also available. Contact us for details.
Note 4. When the X-axis stroke is longer than 850mm, resonance of the ball screw may occur depending on the operation conditions (critical speed). In this case, reduce the speed setting on the program by referring to the maximum speeds shown in the table below.
Note 5. Per 1cf (0.1μm base), when suction blower is used.
Note 6. The necessary intake amount varies depending on the use conditions and environment.

Maximum payload (kg)

Y stroke (mm)	ZSC12	ZSC6
150 to 650	3	5

Controller

Controller	Operation method
RCX340	Programming / I/O point trace / Remote command / Operation using RS-232C communication

SXYxC 3 axes / ZSC T1

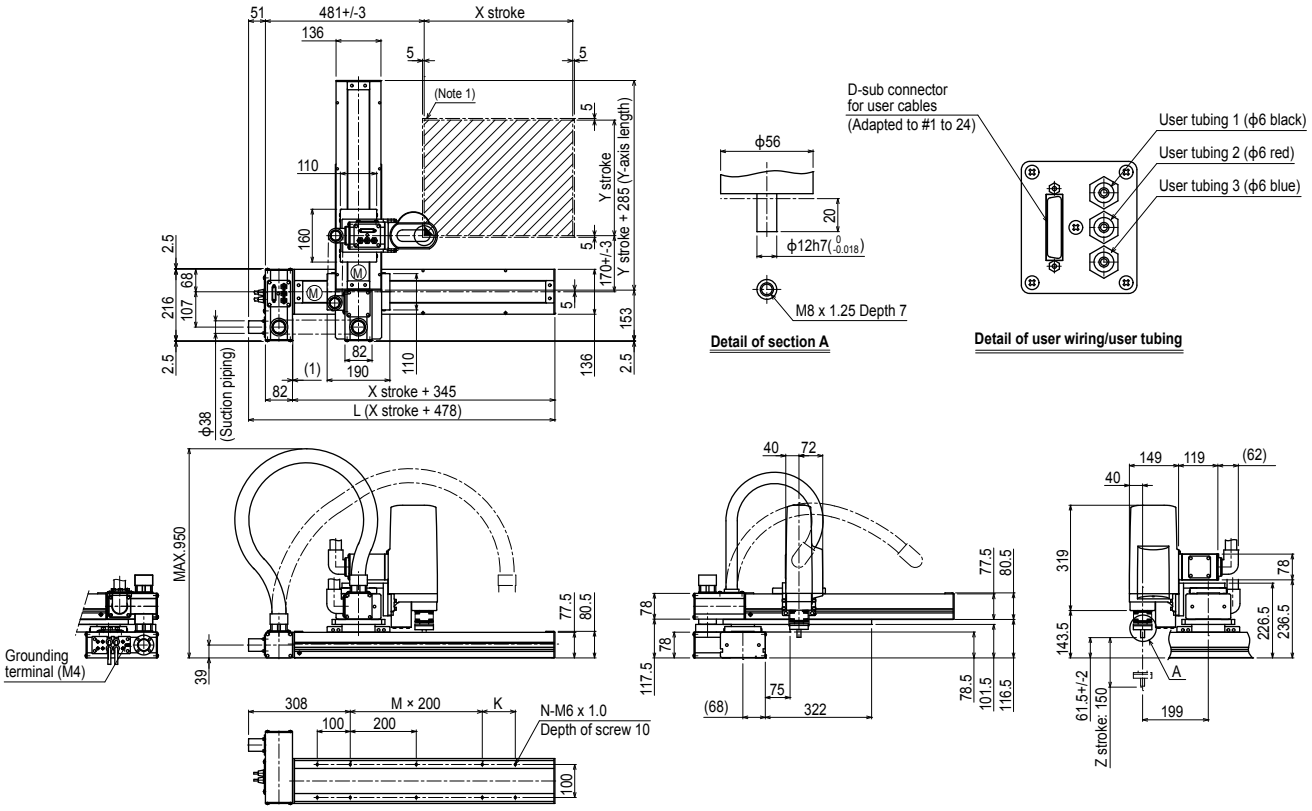

X stroke	150	250	350	450	550	650	750	850	950	1050
L	628	728	828	928	1028	1128	1228	1328	1428	1528
K	200	100	200	100	200	100	200	100	200	100
M	0	1	1	2	2	3	3	4	4	5
N	6	8	8	10	10	12	12	14	14	16

Y stroke	150	250	350	450	550	650
Z stroke	150					

Maximum speed for each stroke (mm/sec) Note 2					
X axis	1000	800	650	550
Speed setting	–	80%	65%	55%

Note 1. The moving range when returning to origin and the stop position when stopping by mechanical stopper.

Note 2. When the X-axis stroke is longer than 850mm, resonance of the ball screw may occur depending on the operation conditions (critical speed). In this case, reduce the speed setting on the program by referring to the maximum speeds shown in the table at the left.

SXYxC 3 axes / ZSC T3

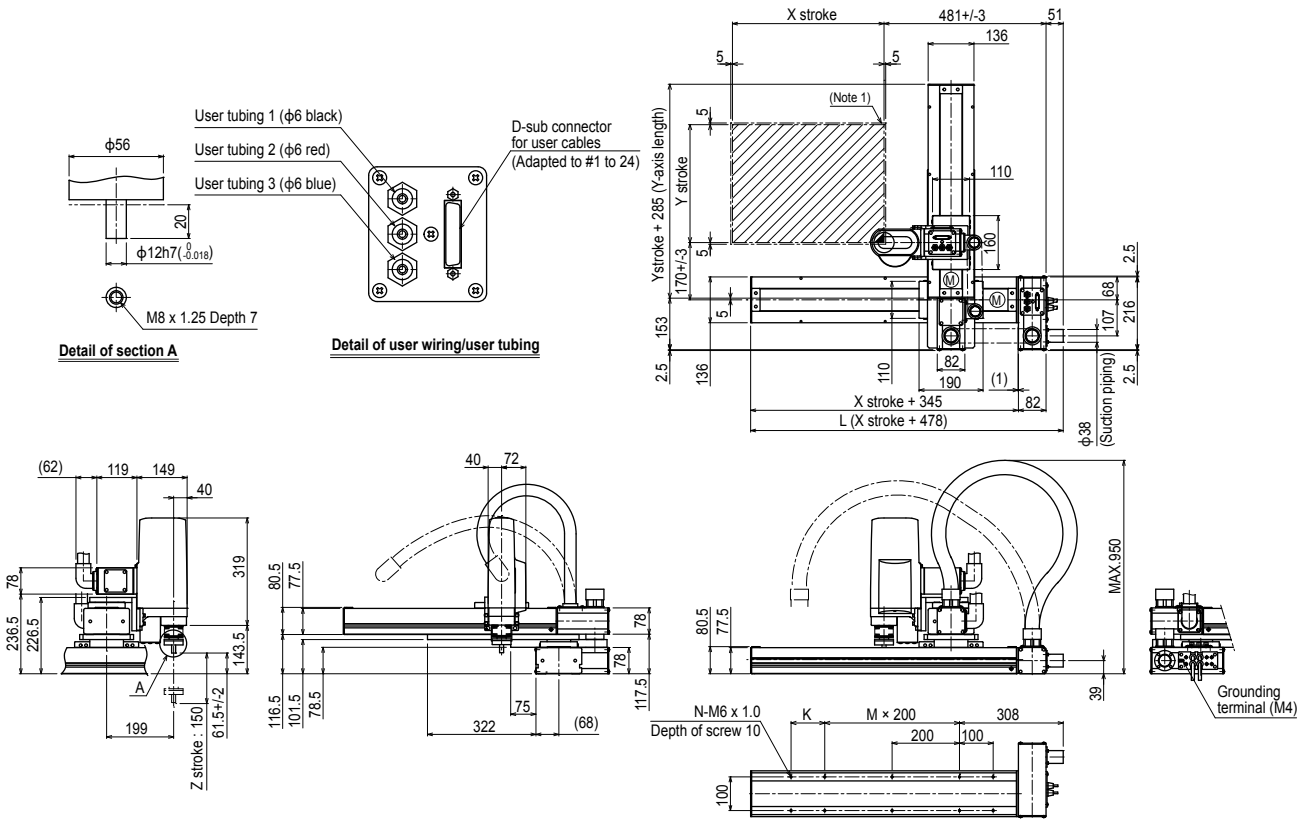

X stroke	150	250	350	450	550	650	750	850	950	1050
L	628	728	828	928	1028	1128	1228	1328	1428	1528
K	200	100	200	100	200	100	200	100	200	100
M	0	1	1	2	2	3	3	4	4	5
N	6	8	8	10	10	12	12	14	14	16

Y stroke	150	250	350	450	550	650

Z stroke	150

Maximum speed for each stroke (mm/sec) Note 2					
X axis	1000	800	650	550
Speed setting	–	80%	65%	55%

Note 1. The moving range when returning to origin and the stop position when stopping by mechanical stopper.

Note 2. When the X-axis stroke is longer than 850mm, resonance of the ball screw may occur depending on the operation conditions (critical speed). In this case, reduce the speed setting on the program by referring to the maximum speeds shown in the table at the left.

SXYxC

4 axes / ZRSC

● Clean type ● Cable duct ● ZR-axis integrated type

Ordering method

SXYxC - D - [ ] - [ ] - [ ] - [ ] - 15 - [ ] - RCX340-4 - [ ] - [ ] - [ ] - [ ] - [ ] - [ ] - [ ]

Model	Cable	Combination	X axis stroke	Y axis stroke	ZR axis	Z axis stroke	Cable length	Controller / Number of controllable axes	Safety standard	Option A (OP.A)	Option B (OP.B)	Option C (OP.C)	Option D (OP.D)	Option E (OP.E)	Absolute battery
	D: Cable duct	T1 T3	15 to 105cm	15 to 65cm	ZRSC12 ZRSC6		3L: 3.5m 5L: 5m 10L: 10m								

Specify various controller setting items. RCX340 ▶ P.636

Basic specifications

	X axis	Y axis	Z axis ZRSC12	Z axis ZRSC6	R axis
Axis construction Note 1	C14H	C14	–		R5
AC servo motor output (W)	200	100	60		100
Repeatability Note 2 (XYZ: mm) (R: °)	+/-0.01	+/-0.01	+/-0.02		+/-0.005
Drive system	Ball screw ϕ15	Ball screw ϕ15	Ball screw ϕ12		Harmonic gear
Ball screw lead Note 3 (Deceleration ratio) (mm)	20	20	12	6	(1/50)
Maximum speed Note 4 (XYZ: mm/sec) (R: °/sec)	1000	1000	1000	500	1020
Moving range (XYZ: mm) (R: °)	150 to 1050	150 to 650	150		360
Robot cable length (m)	Standard: 3.5 Option: 5, 10				
Degree of cleanliness	CLASS 10 Note 5				
Intake air (Nℓ/min)	90 Note 6				

Note 1. Use caution that the frame machining (installation holes, tap holes) differs from single-axis robots'.
Note 2. Positioning repeatability in one direction.
Note 3. Leads not listed in the catalog are also available. Contact us for details.
Note 4. When the X-axis stroke is longer than 850mm, resonance of the ball screw may occur depending on the operation conditions (critical speed). In this case, reduce the speed setting on the program by referring to the maximum speeds shown in the table below.
Note 5. Per 1cf (0.1μm base), when suction blower is used.
Note 6. The necessary intake amount varies depending on the use conditions and environment.

Maximum payload (kg)

Y stroke (mm)	ZRSC12	ZRSC6
150	3	5
250		
350		
450		
550		
650		4

Controller

Controller	Operation method
RCX340	Programming / I/O point trace / Remote command / Operation using RS-232C communication

SXYxC 4 axes / ZRSC T1

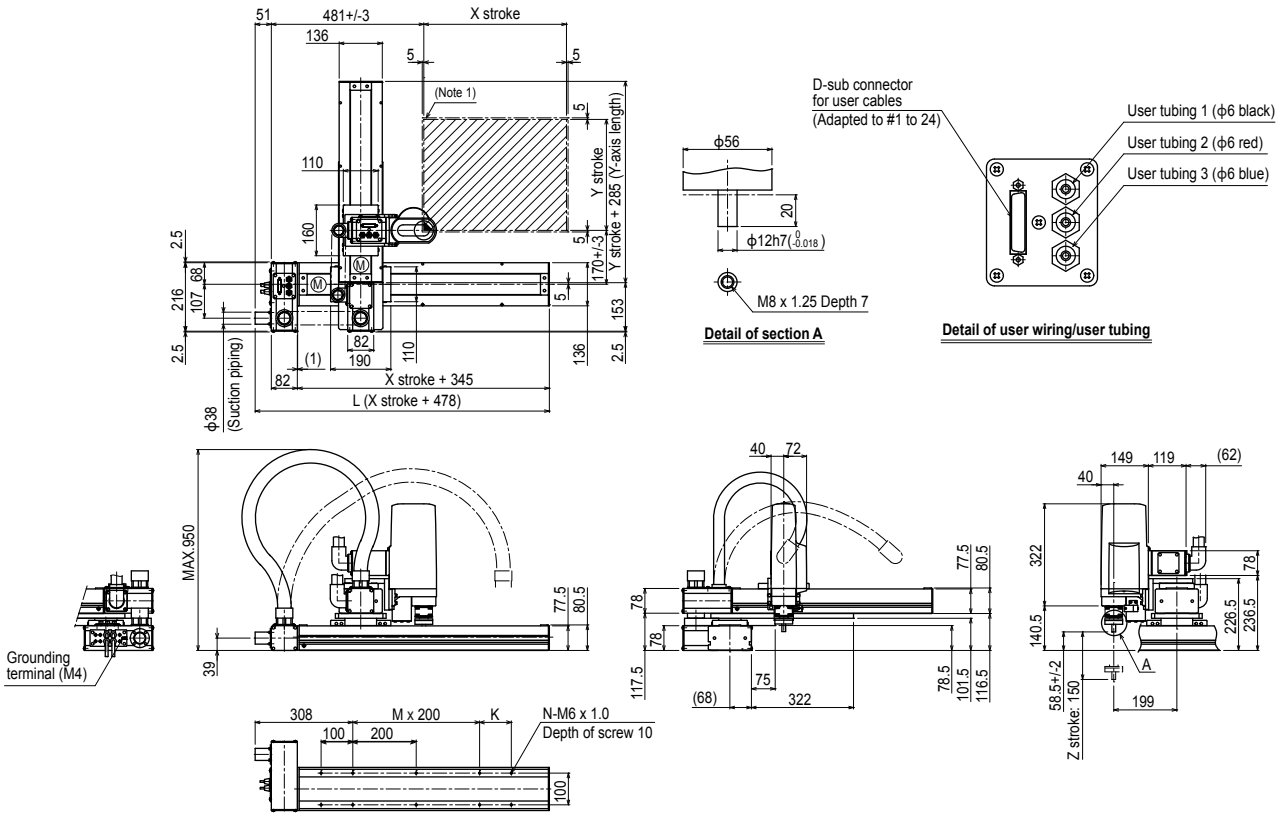

X stroke	150	250	350	450	550	650	750	850	950	1050
L	628	728	828	928	1028	1128	1228	1328	1428	1528
K	200	100	200	100	200	100	200	100	200	100
M	0	1	1	2	2	3	3	4	4	5
N	6	8	8	10	10	12	12	14	14	16

Y stroke	150	250	350	450	550	650

Z stroke	150

Maximum speed for each stroke (mm/sec) Note 2					
X axis	1000	800	650	550
Speed setting	–	80%	65%	55%

Note 1. The moving range when returning to origin and the stop position when stopping by mechanical stopper.

Note 2. When the X-axis stroke is longer than 850mm, resonance of the ball screw may occur depending on the operation conditions (critical speed). In this case, reduce the speed setting on the program by referring to the maximum speeds shown in the table at the left.

SXYxC 4 axes / ZRSC T3

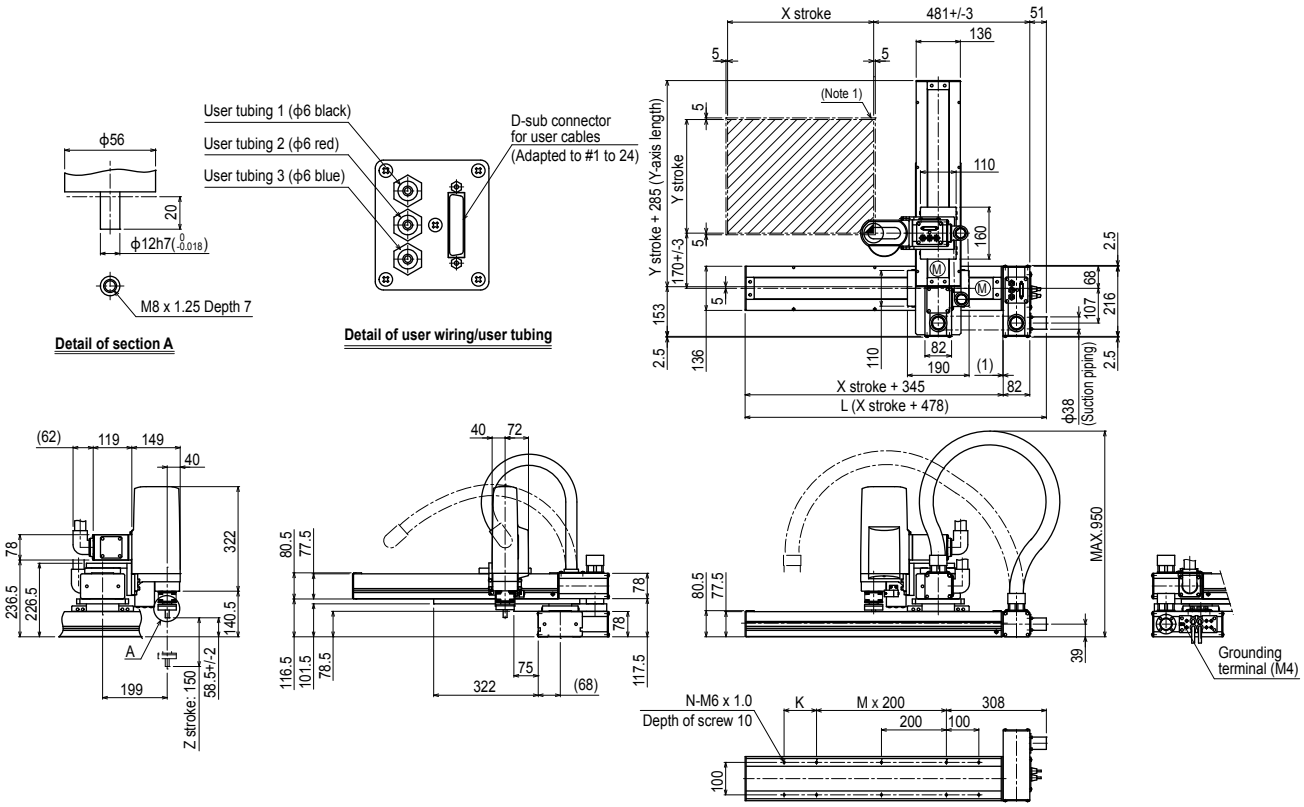

X stroke	150	250	350	450	550	650	750	850	950	1050
L	628	728	828	928	1028	1128	1228	1328	1428	1528
K	200	100	200	100	200	100	200	100	200	100
M	0	1	1	2	2	3	3	4	4	5
N	6	8	8	10	10	12	12	14	14	16

Y stroke	150	250	350	450	550	650

Z stroke	150

Maximum speed for each stroke (mm/sec) Note 2					
X axis	1000	800	650	550
Speed setting	–	80%	65%	55%

Note 1. The moving range when returning to origin and the stop position when stopping by mechanical stopper.

Note 2. When the X-axis stroke is longer than 850mm, resonance of the ball screw may occur depending on the operation conditions (critical speed). In this case, reduce the speed setting on the program by referring to the maximum speeds shown in the table at the left.

YK180XC

Clean type: Extra small type

Note. Built-to-order product. Contact us for the delivery period.

- Arm length 180mm
- Maximum payload 1kg

Ordering method

YK180XC - 100 - [ ] - RCX340-4 - [ ] - [ ] - [ ] - [ ] - [ ] - [ ] - [ ]

Model	Z axis stroke	Cable length	Controller / Number of controllable axes	Safety standard	Option A (OP.A)	Option B (OP.B)	Option C (OP.C)	Option D (OP.D)	Option E (OP.E)	Absolute battery
YK180XC	100: 100mm	3L: 3.5m 5L: 5m 10L: 10m	RCX340-4							

Specify various controller setting items. RCX340 ▶ P.636

Basic specifications

		X axis	Y axis	Z axis	R axis
Axis specifications	Arm length (mm)	71	109	100	–
	Rotation angle (˚)	+/-120	+/-140	–	+/-360
AC servo motor output (W)		50	30	30	30
Repeatability Note 1 (XYZ: mm) (R: ˚)		+/-0.01		+/-0.01	+/-0.004
Maximum speed (XYZ: m/sec) (R: ˚/sec)		3.3		0.7	1700
Maximum payload (kg)		1.0			
Standard cycle time: with 0.1kg payload Note 2 (sec)		0.42			
R-axis tolerable moment of inertia Note 3 (kgm²)		0.01			
User wiring (sq × wires)		0.1 × 8			
User tubing (Outer diameter)		ϕ3 × 2			
Travel limit		1.Soft limit, 2.Mechanical limit (X, Y, Zaxis)			
Robot cable length (m)		Standard: 3.5 Option: 5, 10			
Weight (kg) (Excluding robot cable) Note 4		6.5			
Robot cable weight		1.5kg (3.5m) 2.1kg (5m) 4.2kg (10m)			
Degree of cleanliness		CLASS 10 (0.1 μm base)			
Intake air (Nℓ/min)		30			

Note 1. This is the value at a constant ambient temperature. (X,Y axes)
Note 2. When moving 25mm in vertical direction and 100mm in horizontal direction reciprocally.
Note 3. The acceleration coefficient is set automatically in accordance with the tip weight and R-axis moment of inertia settings.
Note 4. The total robot weight is the sum of the robot body weight and the cable weight.

Controller

Controller	Power capacity (VA)	Operation method
RCX340	500	Programming / I/O point trace / Remote command / Operation using RS-232C communication

YK180XC

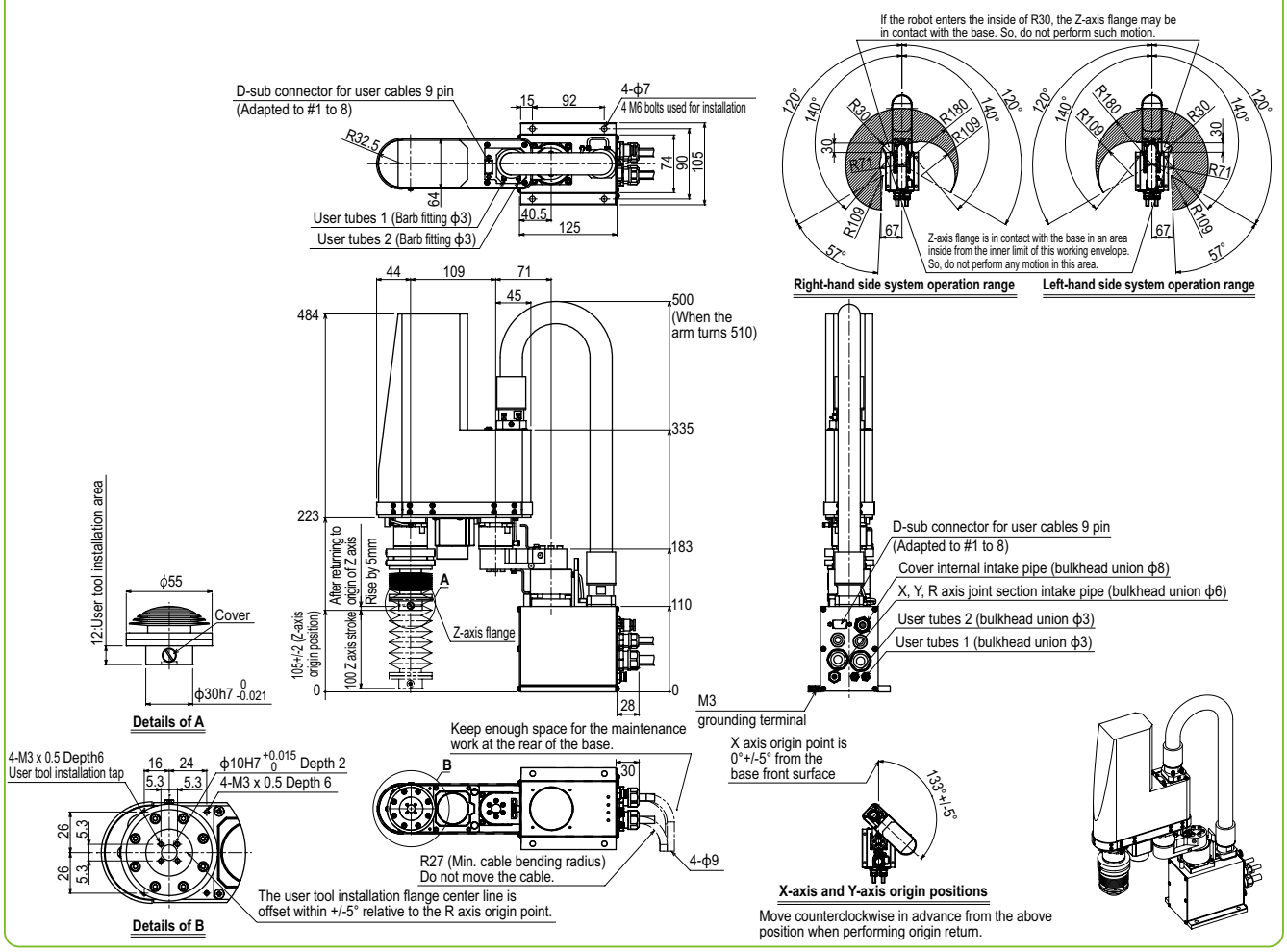

Controller RCX340 ▶ 636

YK220XC

Clean type: Extra small type

Note. Built-to-order product. Contact us for the delivery period.

- Arm length 220mm
- Maximum payload 1kg

Ordering method

YK220XC - 100 - [ ] - RCX340-4 - [ ] - [ ] - [ ] - [ ] - [ ] - [ ] - [ ]

Model	Z axis stroke	Cable length	Controller / Number of controllable axes	Safety standard	Option A (OP.A)	Option B (OP.B)	Option C (OP.C)	Option D (OP.D)	Option E (OP.E)	Absolute battery
YK220XC	100: 100mm	3L: 3.5m 5L: 5m 10L: 10m	RCX340-4							

Specify various controller setting items. RCX340 ▶ P.636

Basic specifications

		X axis	Y axis	Z axis	R axis
Axis specifications	Arm length (mm)	111	109	100	–
	Rotation angle (°)	+/-120	+/-140	–	+/-360
AC servo motor output (W)		50	30	30	30
Repeatability Note 1 (XYZ: mm) (R: °)		+/-0.01		+/-0.01	+/-0.004
Maximum speed (XYZ: m/sec) (R: °/sec)		3.4		0.7	1700
Maximum payload (kg)		1.0			
Standard cycle time: with 0.1kg payload Note 2 (sec)		0.45			
R-axis tolerable moment of inertia Note 3 (kgm²)		0.01			
User wiring (sq × wires)		0.1 × 8			
User tubing (Outer diameter)		ϕ3 × 2			
Travel limit		1.Soft limit, 2.Mechanical stopper (X, Y, Z axes)			
Robot cable length (m)		Standard: 3.5 Option: 5, 10			
Weight (kg) (Excluding robot cable) Note 4		6.5			
Robot cable weight		1.5kg (3.5m) 2.1kg (5m) 4.2kg (10m)			
Degree of cleanliness		CLASS 10 (0.1μm base)			
Intake air (Nℓ/min)		30			

Note 1. This is the value at a constant ambient temperature.
Note 2. When reciprocating 100mm in horizontal and 25mm in vertical directions.
Note 3. The acceleration coefficient is set automatically in accordance with the tip weight and R-axis moment of inertia settings.
Note 4. The total robot weight is the sum of the robot body weight and the cable weight.

Controller

Controller	Power capacity (VA)	Operation method
RCX340	500	Programming / I/O point trace / Remote command / Operation using RS-232C communication

YK220XC

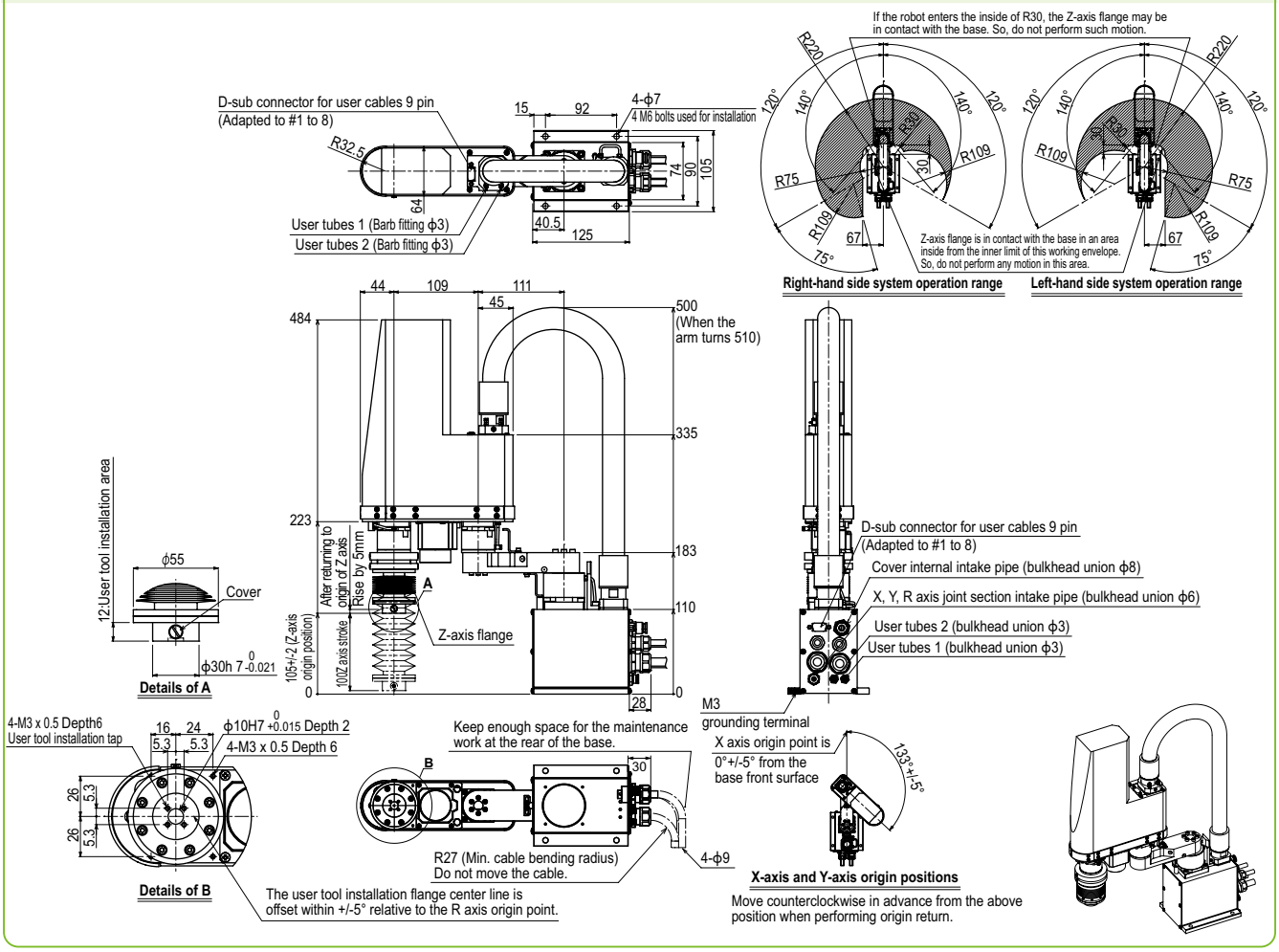

Controller RCX340 ▶ 636

YK250XGC

Clean type: Small type

- Arm length 250mm
- Maximum payload 4kg

Ordering method

YK250XGC - 150	-		- S	-	RCX340-4	-							
Model	Z axis stroke 150: 150mm	Tool flange No entry: None F: With tool flange	Hollow shaft S: With hollow shaft	Cable length 3L: 3.5m 5L: 5m 10L: 10m	Controller / Number of controllable axes	Safety standard	Option A (OP.A)	Option B (OP.B)	Option C (OP.C)	Option D (OP.D)	Option E (OP.E)	Absolute battery

Specify various controller setting items. RCX340 ▶ P.636

Basic specifications

		X axis	Y axis	Z axis	R axis
Axis specifications	Arm length (mm)	100	150	150	–
	Rotation angle (°)	+/-129	+/-134	–	+/-360
AC servo motor output (W)		200	150	50	100
Repeatability Note 1 (XYZ: mm) (R: °)		+/-0.01		+/-0.01	+/-0.004
Maximum speed (XYZ: m/sec) (R: °/sec)		4.5		1.1	1020
Maximum payload (kg)		4			
Standard cycle time: with 2kg payload (sec) Note 2		0.50			
R-axis tolerable moment of inertia Note 3 (kgm^2)		0.05			
User wiring (sq × wires)		0.2×10			
User tubing (Outer diameter)		ϕ4×4			
Travel limit		1.Soft limit, 2.Mechanical stopper (X, Y, Z axes)			
Robot cable length (m)		Standard: 3.5 Option: 5, 10			
Weight (kg)		21.5			
Degree of cleanliness		ISO CLASS 3 (ISO 14644-1) Note 4 +ESD Note 5			
Intake air (Nℓ/min)		30 Note 6			

Note 1. This is the value at a constant ambient temperature. (X,Y axes)
Note 2. When reciprocating 25mm in vertical direction and 300mm in horizontal direction (rough-positioning arch motion).
Note 3. The acceleration coefficient is set automatically in accordance with the tip weight and R-axis moment of inertia settings.
Note 4. ESD (ElectroStatic discharge) specifications are custom-ordered. Please contact our distributor.
Note 5. The necessary intake amount varies depending on the use conditions and environment.

Controller

Controller	Power capacity (VA)	Operation method
RCX340	1000	Programming / I/O point trace / Remote command / Operation using RS-232C communication

Note. The movement range can be limited by changing the positions of X and Y axis mechanical stoppers. (The movement range is set to the maximum at the time of shipment.)
See our robot manuals (installation manuals) for detailed information.
Note. To set the standard coordinates with high accuracy, use a standard coordinate setting jig (option). Refer to the user's manual (installation manual) for more details.

Our robot manuals (installation manuals) can be downloaded from our website at the address below:
https://global.yamaha-motor.com/business/robot/

YK250XGC

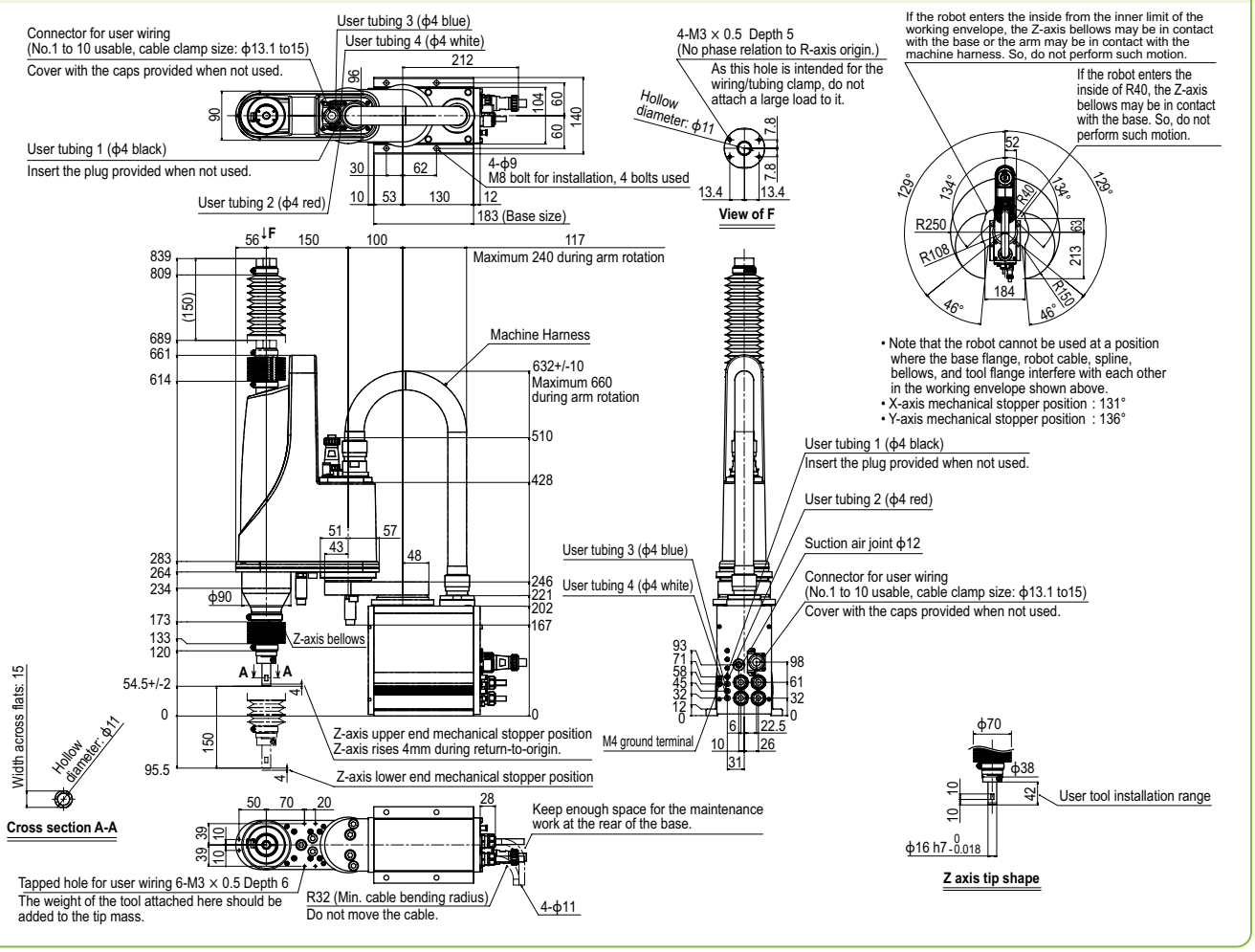

Controller RCX340 ▶ 636

YK250XGC Tool flange mount type

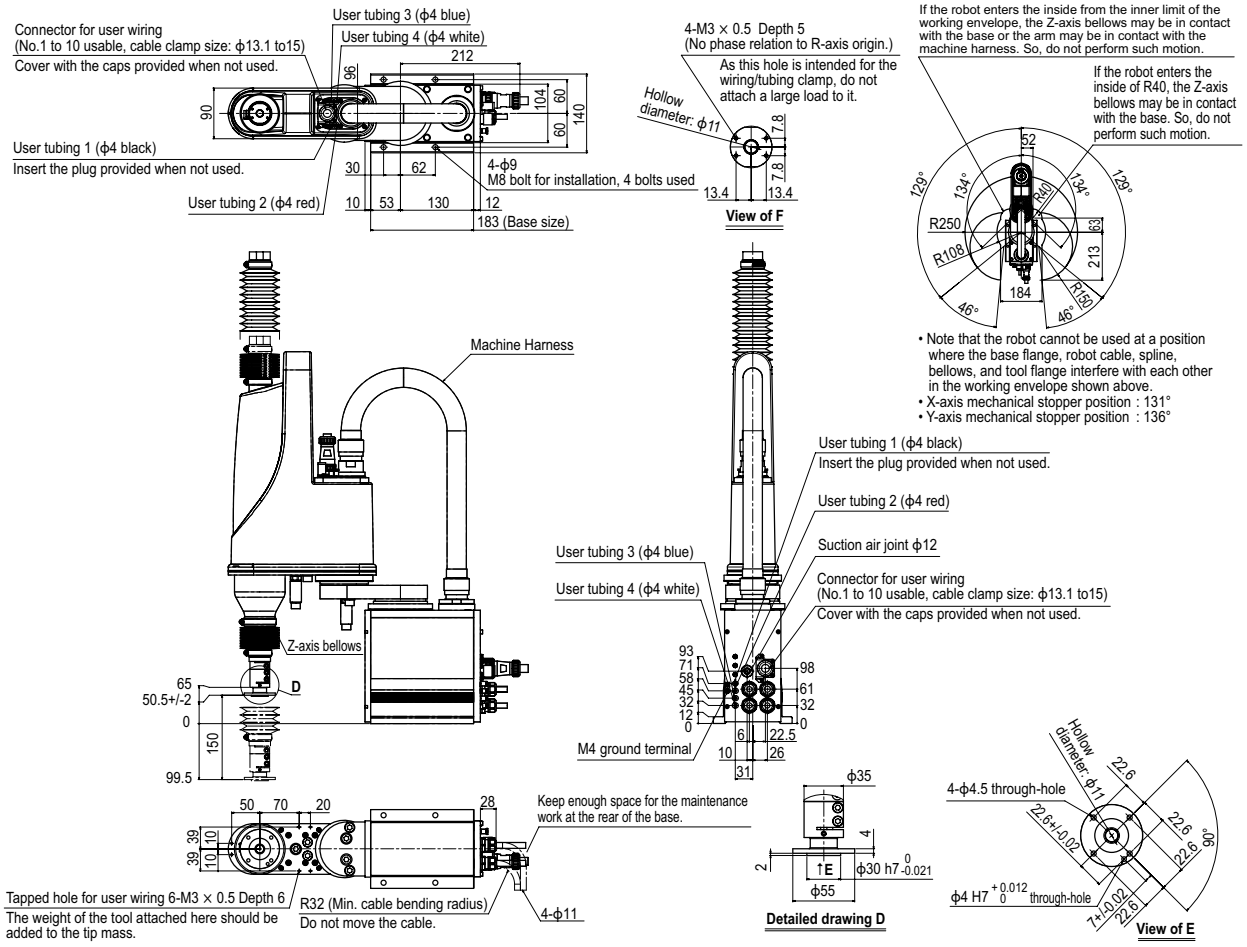

YK350XGC

Clean type: Small type

- Arm length 350mm
- Maximum payload 4kg

Ordering method

YK350XGC - 150 - [ ] - S - [ ] - RCX340-4 - [ ] - [ ] - [ ] - [ ] - [ ] - [ ] - [ ]

Model	Z axis stroke	Tool flange	Hollow shaft	Cable length	Controller / Number of controllable axes	Safety standard	Option A (OP.A)	Option B (OP.B)	Option C (OP.C)	Option D (OP.D)	Option E (OP.E)	Absolute battery
	150: 150mm	No entry: None F: With tool flange	S: With hollow shaft	3L: 3.5m 5L: 5m 10L: 10m								

Specify various controller setting items. RCX340 ▶ P.636

Basic specifications

		X axis	Y axis	Z axis	R axis
Axis specifications	Arm length (mm)	200	150	150	–
	Rotation angle (˚)	+/-129	+/-134	–	+/-360
AC servo motor output (W)		200	150	50	100
Repeatability Note 1 (XYZ: mm) (R: ˚)		+/-0.01		+/-0.01	+/-0.004
Maximum speed (XYZ: m/sec) (R: ˚/sec)		5.6		1.1	1020
Maximum payload (kg)		4			
Standard cycle time: with 2kg payload (sec) Note 2		0.52			
R-axis tolerable moment of inertia Note 3 (kgm^2)		0.05			
User wiring (sq × wires)		0.2×10			
User tubing (Outer diameter)		ϕ4×4			
Travel limit		1.Soft limit, 2.Mechanical stopper (X, Y, Z axes)			
Robot cable length (m)		Standard: 3.5 Option: 5, 10			
Weight (kg)		22			
Degree of cleanliness		ISO CLASS 3 (ISO 14644-1) Note 4 +ESD Note 5			
Intake air (Nℓ/min)		30 Note 6			

Note 1. This is the value at a constant ambient temperature. (X,Y axes)
Note 2. When reciprocating 25mm in vertical direction and 300mm in horizontal direction (rough-positioning arch motion).
Note 3. The acceleration coefficient is set automatically in accordance with the tip weight and R-axis moment of inertia settings.
Note 4. ESD (ElectroStatic discharge) specifications are custom-ordered. Please contact our distributor.
Note 5. The necessary intake amount varies depending on the use conditions and environment.

Controller

Controller	Power capacity (VA)	Operation method
RCX340	1000	Programming / I/O point trace / Remote command / Operation using RS-232C communication

Note. The movement range can be limited by changing the positions of X and Y axis mechanical stoppers. (The movement range is set to the maximum at the time of shipment.)
See our robot manuals (installation manuals) for detailed information.
Note. To set the standard coordinates with high accuracy, use a standard coordinate setting jig (option). Refer to the user's manual (installation manual) for more details.

Our robot manuals (installation manuals) can be downloaded from our website at the address below:
https://global.yamaha-motor.com/business/robot/

YK350XGC

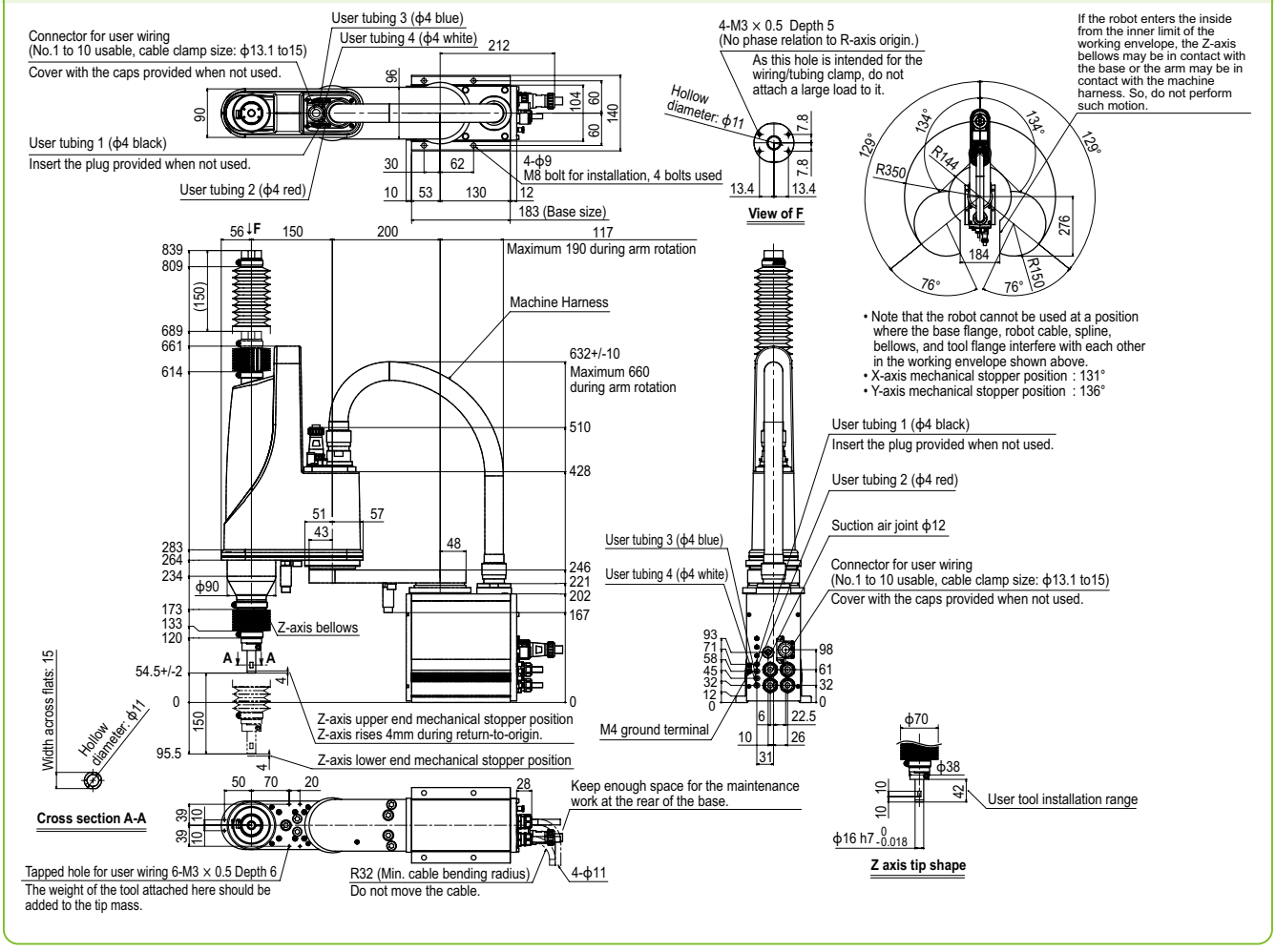

Controller RCX340 ▶ 636

YK350XGC Tool flange mount type

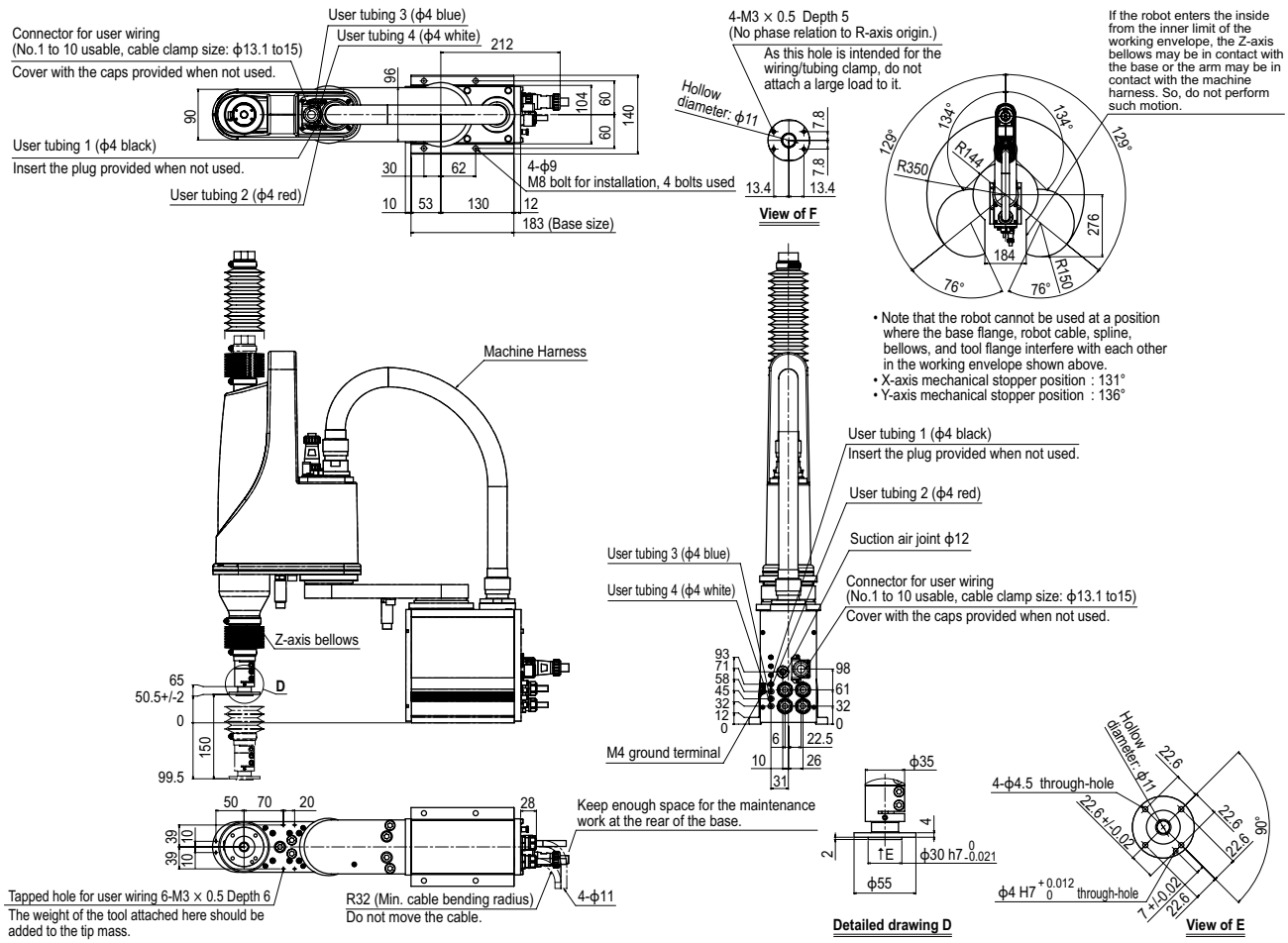

YK400XGC

Clean type: Small type

- Arm length 400mm
- Maximum payload 4kg

Ordering method

YK400XGC - 150 - [ ] - S - [ ] - RCX340-4 - [ ] - [ ] - [ ] - [ ] - [ ] - [ ] - [ ]

Model	Z axis stroke	Tool flange	Hollow shaft	Cable length	Controller / Number of controllable axes	Safety standard	Option A (OP.A)	Option B (OP.B)	Option C (OP.C)	Option D (OP.D)	Option E (OP.E)	Absolute battery
	150: 150mm	No entry: None F: With tool flange	S: With hollow shaft	3L: 3.5m 5L: 5m 10L: 10m								

Specify various controller setting items. RCX340 ▶ P.636

Basic specifications

		X axis	Y axis	Z axis	R axis
Axis specifications	Arm length (mm)	250	150	150	–
	Rotation angle (˚)	+/-129	+/-144	–	+/-360
AC servo motor output (W)		200	150	50	100
Repeatability Note 1 (XYZ: mm) (R: ˚)		+/-0.01		+/-0.01	+/-0.004
Maximum speed (XYZ: m/sec) (R: ˚/sec)		6.1		1.1	1020
Maximum payload (kg)		4			
Standard cycle time: with 2kg payload (sec) Note 2		0.50			
R-axis tolerable moment of inertia Note 3 (kgm^2)		0.05			
User wiring (sq × wires)		0.2×10			
User tubing (Outer diameter)		ϕ4×4			
Travel limit		1.Soft limit, 2.Mechanical stopper (X, Y, Z axes)			
Robot cable length (m)		Standard: 3.5 Option: 5, 10			
Weight (kg)		22.5			
Degree of cleanliness		ISO CLASS 3 (ISO 14644-1) Note 4 +ESD Note 5			
Intake air (Nℓ/min)		30 Note 6			

Note 1. This is the value at a constant ambient temperature. (X,Y axes)
Note 2. When reciprocating 25mm in vertical direction and 300mm in horizontal direction (rough-positioning arch motion).
Note 3. The acceleration coefficient is set automatically in accordance with the tip weight and R-axis moment of inertia settings.
Note 4. ESD (ElectroStatic discharge) specifications are custom-ordered. Please contact our distributor.
Note 5. The necessary intake amount varies depending on the use conditions and environment.

Controller

Controller	Power capacity (VA)	Operation method
RCX340	1000	Programming / I/O point trace / Remote command / Operation using RS-232C communication

Note. The movement range can be limited by changing the positions of X and Y axis mechanical stoppers. (The movement range is set to the maximum at the time of shipment.)
See our robot manuals (installation manuals) for detailed information.
Note. To set the standard coordinates with high accuracy, use a standard coordinate setting jig (option). Refer to the user's manual (installation manual) for more details.

Our robot manuals (installation manuals) can be downloaded from our website at the address below:
https://global.yamaha-motor.com/business/robot/

YK400XGC

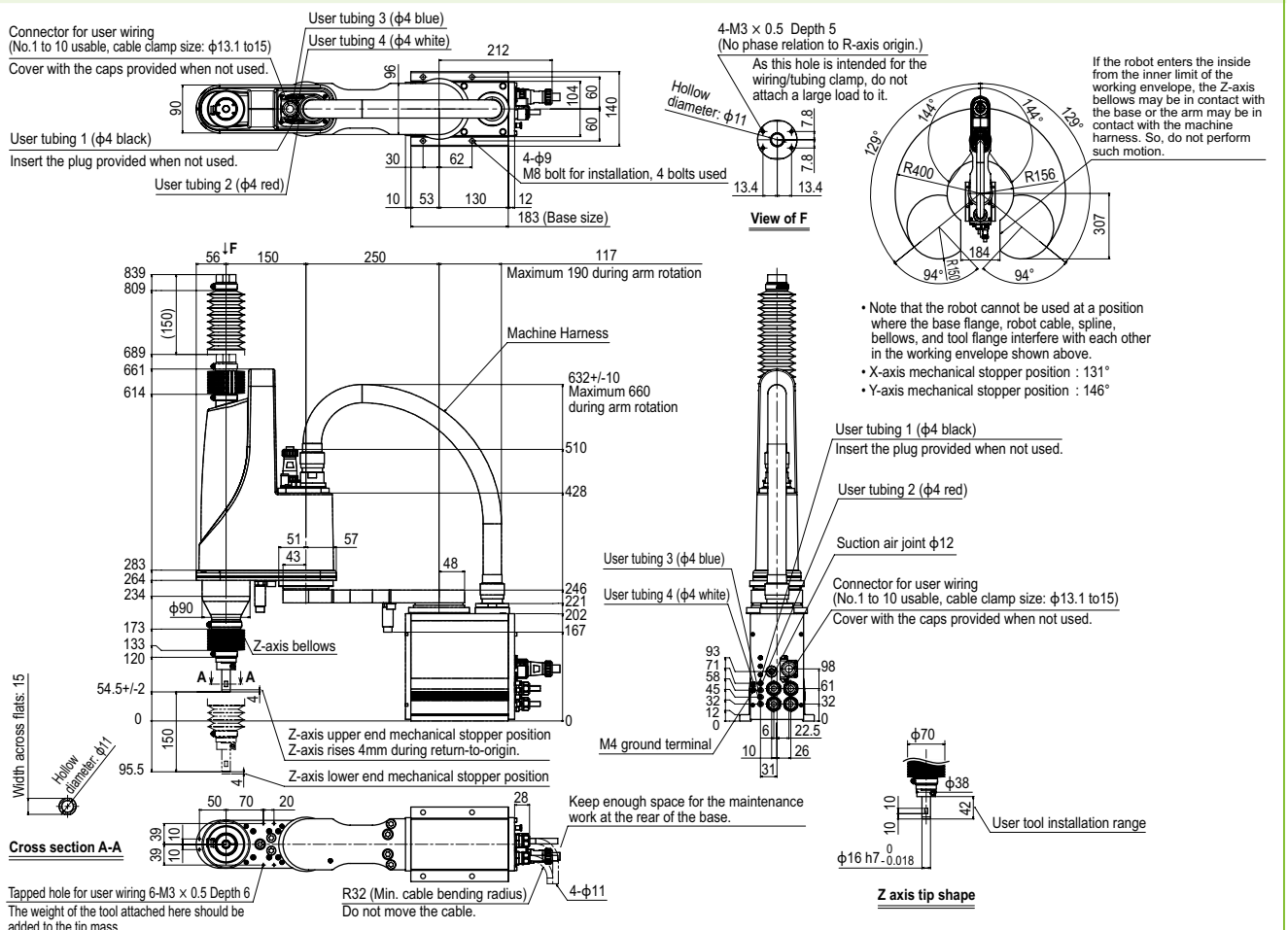

Controller RCX340 ▶ 636

YK400XGC Tool flange mount type

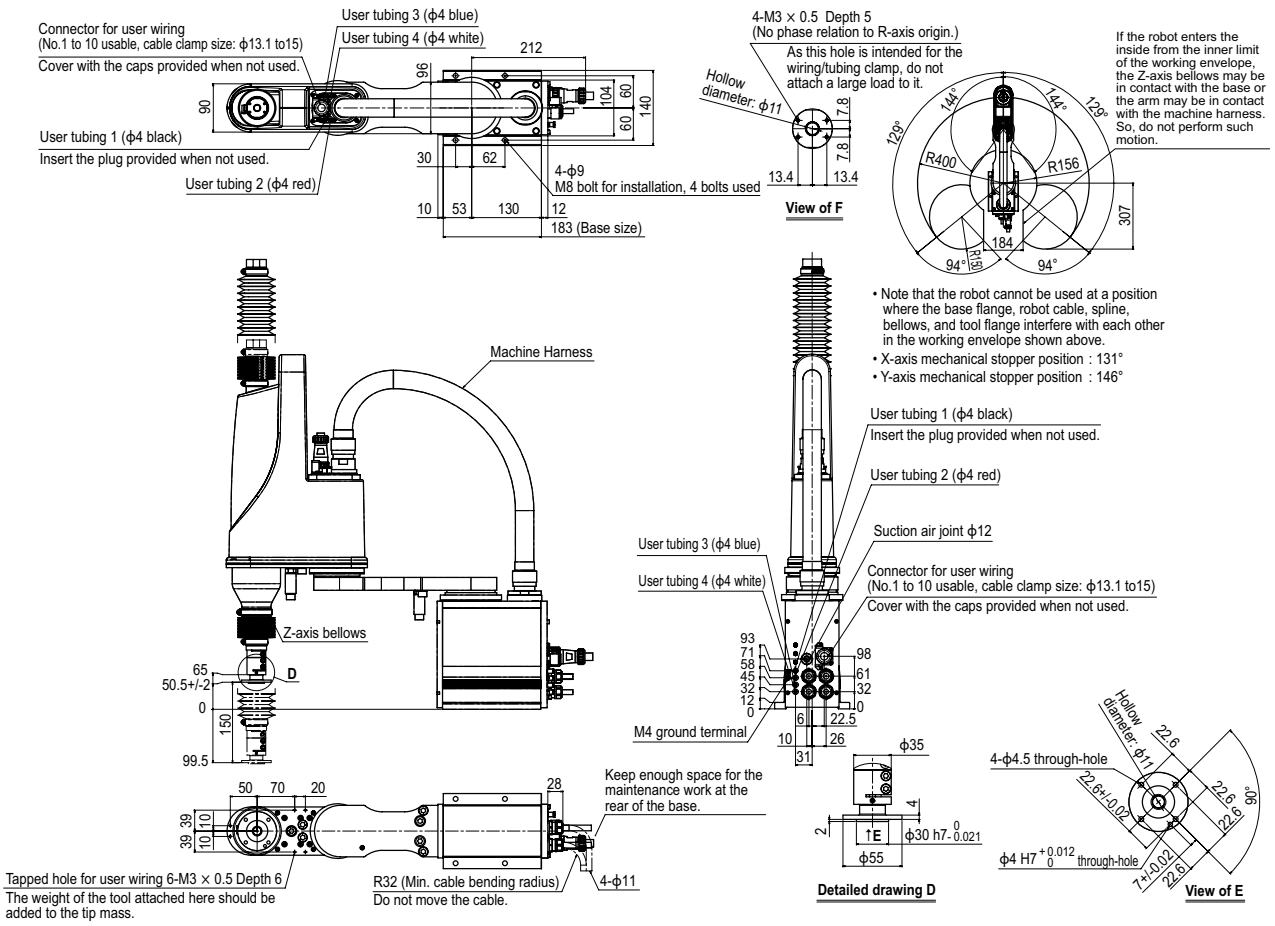

YK400XEC-4

Clean type: Small type

LOW COST HIGH PERFORMANCE MODEL

Arm length 400mm **Maximum payload 4kg**

Ordering method

YK400XEC	- 4	- 150	-		-		-	RCX340-4	-		-	
Model	Maximum payload	Z axis stroke	Brake release switch		Cable length		Controller / Number of controllable axes		Safety standard	Option A to E (OP.A to E)	Absolute battery
			No entry: None BS: With brake release switch		3L: 3.5m 5L: 5m 10L: 10m						

Specify various controller setting items. RCX340 ▶ P.636

Basic specifications

			X axis	Y axis	Z axis	R axis
Axis specifications	Arm length (mm)		225	175	150	–
	Rotation angle (˚)		+/-132	+/-145	–	+/-360
AC servo motor output (W)			200	100	100	100
Deceleration mechanism	Transmission method	Motor to speed reducer	Direct-coupled		Timing belt	
		Speed reducer to output	Direct-coupled			Timing belt
Repeatability Note 1 (XYZ: mm) (R: ˚)			+/-0.01		+/-0.01	+/-0.01
Maximum speed (XYZ: m/sec) (R: ˚/sec)			6		1.1	2600
Maximum payload (kg)			4			
Standard cycle time: with 2kg payload (sec) Note 2			0.45			
R-axis tolerable moment of inertia Note 3 (kgm²)			0.05			
User wiring (sq × wires)			0.2×10			
User tubing (Outer diameter)			ϕ4×3			
Travel limit			1.Soft limit, 2.Mechanical stopper (X, Y, Z axes)			
Robot cable length (m)			Standard: 3.5 Option: 5, 10			
Weight (kg)			18			
Degree of cleanliness			ISO CLASS 4 (ISO 14644-1)			
Intake air (Nℓ/min)			55 Note 4			

Note 1. This is the value at a constant ambient temperature. (X,Y axes)
Note 2. When reciprocating 300mm in horizontal and 25mm in vertical directions and performing the coarse positioning arch operation.
Note 3. The acceleration coefficient is set automatically in accordance with the tip weight and R-axis moment of inertia settings.
Note 4. Set within the range of ±1Nℓ/min. When the suction volume is not appropriate, it may adversely affect the cleanliness degree or deform the bellows.

Controller

Controller	Power capacity (VA)	Operation method
RCX340	1000	Programming / I/O point trace / Remote command / Operation using RS-232C communication

Note. User wiring/tubing can be passed through from the top to the tip of the Z-axis shaft. For details, see the manual (installation manual).
Note. The movement range can be restricted by adding the X- and Y-axis mechanical stoppers. (The maximum movement range was set at shipment.)
See our robot manuals (installation manuals) for detailed information.
Note. To set the standard coordinates with high accuracy, use a standard coordinate setting jig (option). Refer to the user's manual (installation manual) for more details.

Our robot manuals (installation manuals) can be downloaded from our website at the address below:
https://global.yamaha-motor.com/business/robot/

YK400XEC-4

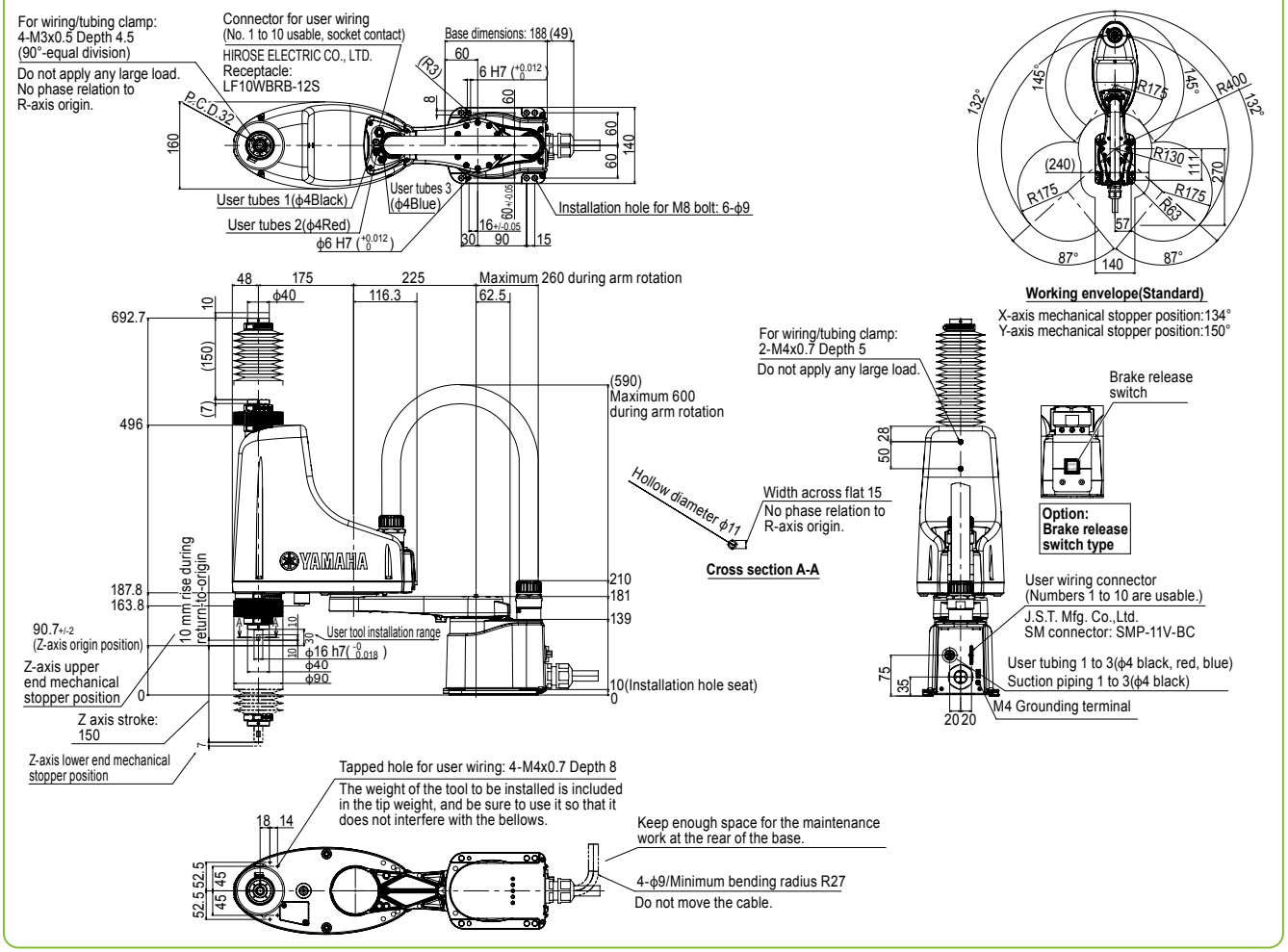

Controller RCX340 ▶ 636

YK500XGLC

Clean type: Medium type

- Arm length 500mm
- Maximum payload 4kg

Ordering method

YK500XGLC - 150	-		-	S	-		-	RCX340-4	-		-		-		-		-		-	
Model	-	Z axis stroke	-	Tool flange	-	Hollow shaft	-	Cable length	-	Controller / Number of controllable axes	-	Safety standard	-	Option A (OP.A)	-	Option B (OP.B)	-	Option C (OP.C)	-	Option D (OP.D)	-	Option E (OP.E)	-	Absolute battery
		150: 150mm		No entry: None F: With tool flange		S: With hollow shaft		3L: 3.5m 5L: 5m 10L: 10m																

Specify various controller setting items. RCX340 ▶ P636

Basic specifications

		X axis	Y axis	Z axis	R axis
Axis specifications	Arm length (mm)	250	250	150	–
	Rotation angle (°)	+/-129	+/-144	–	+/-360
AC servo motor output (W)		200	150	50	100
Repeatability Note 1 (XYZ: mm) (R: °)		+/-0.01		+/-0.01	+/-0.004
Maximum speed (XYZ: m/sec) (R: °/sec)		5.1		1.1	1020
Maximum payload (kg)		4			
Standard cycle time: with 2kg payload (sec) Note 2		0.66			
R-axis tolerable moment of inertia Note 3 (kgm^2)		0.05			
User wiring (sq × wires)		0.2×10			
User tubing (Outer diameter)		ϕ4×4			
Travel limit		1.Soft limit, 2.Mechanical stopper (X, Y, Z axes)			
Robot cable length (m)		Standard: 3.5 Option: 5, 10			
Weight (kg)		25			
Degree of cleanliness		ISO CLASS 3 (ISO 14644-1) Note 4 +ESD Note 5			
Intake air (Nℓ/min)		30 Note 6			

Note 1. This is the value at a constant ambient temperature. (X,Y axes)
Note 2. When reciprocating 25mm in vertical direction and 300mm in horizontal direction (rough-positioning arch motion).
Note 3. The acceleration coefficient is set automatically in accordance with the tip weight and R-axis moment of inertia settings.
Note 4. ESD (ElectroStatic discharge) specifications are custom-ordered. Please contact our distributor.
Note 5. The necessary intake amount varies depending on the use conditions and environment.

Controller

Controller	Power capacity (VA)	Operation method
RCX340	1000	Programming / I/O point trace / Remote command / Operation using RS-232C communication

Note. The movement range can be limited by changing the positions of X and Y axis mechanical stoppers. (The movement range is set to the maximum at the time of shipment.)
See our robot manuals (installation manuals) for detailed information.
Note. To set the standard coordinates with high accuracy, use a standard coordinate setting jig (option). Refer to the user's manual (installation manual) for more details.

Our robot manuals (installation manuals) can be downloaded from our website at the address below:
https://global.yamaha-motor.com/business/robot/

YK500XGLC

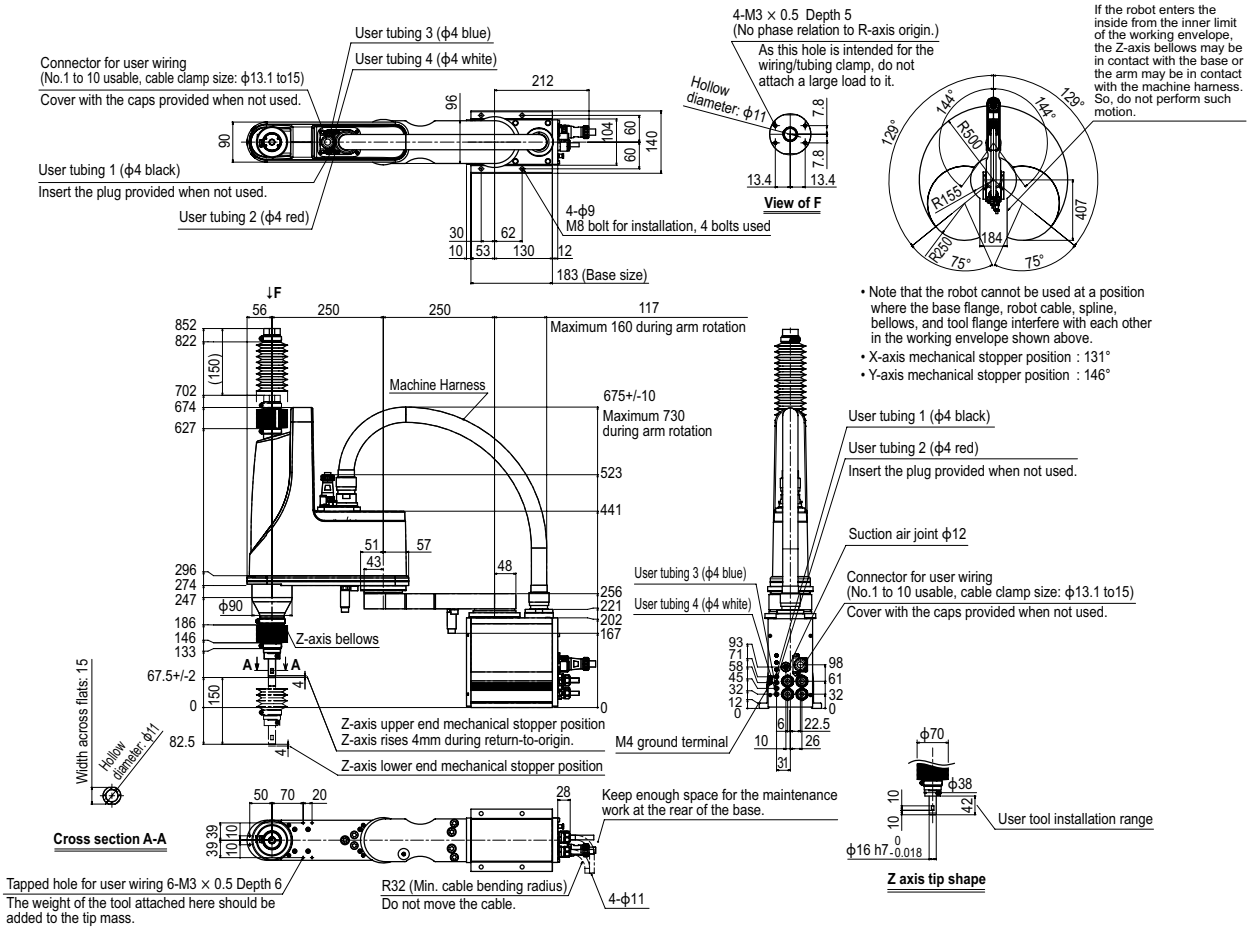

Controller RCX340 ▶ 636

YK500XGLC Tool flange mount type

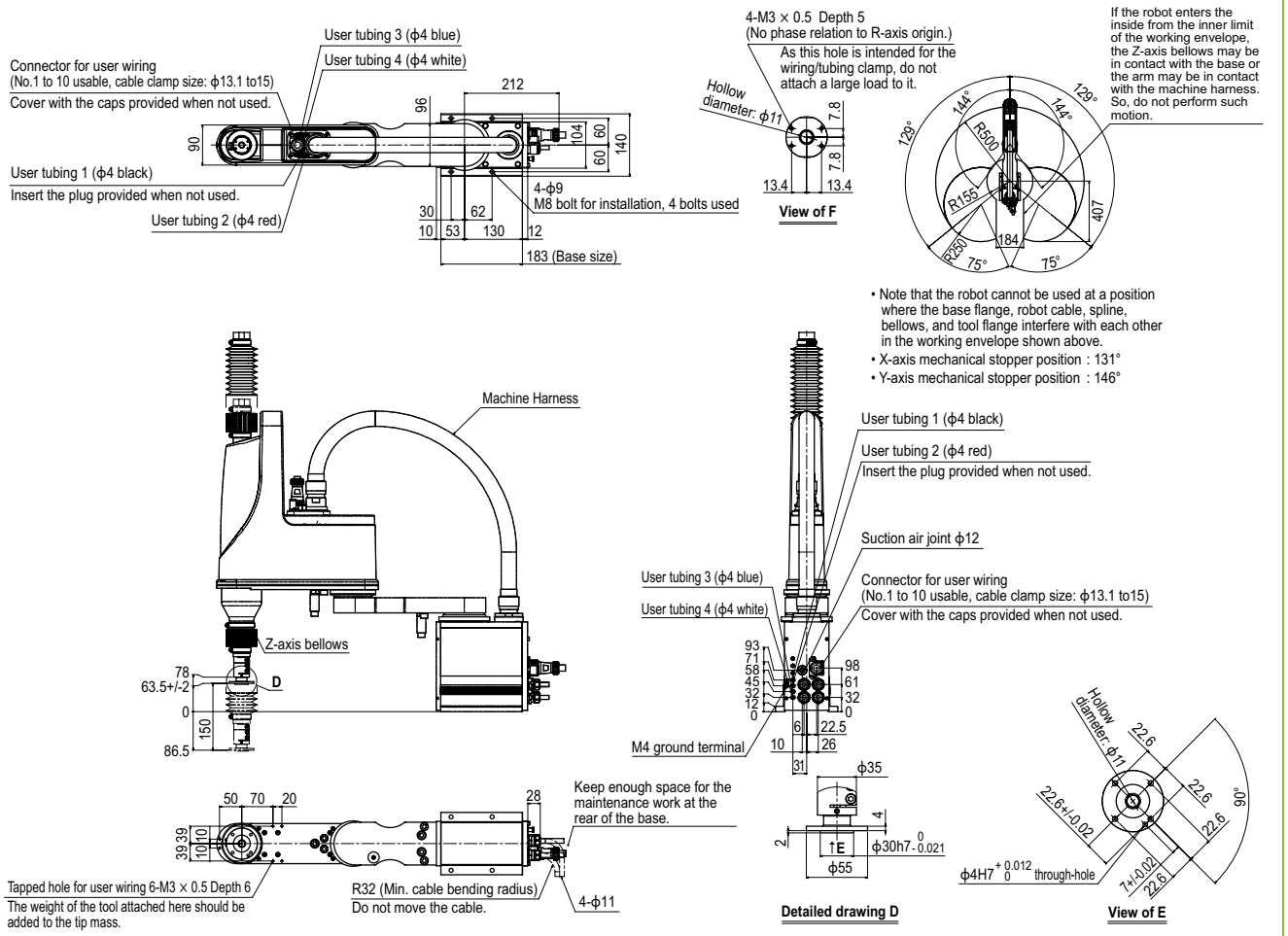

Controller RCX340 ▶ 636

YK500XC

Clean type: Medium type

- Arm length 500mm
- Maximum payload 10kg

Ordering method

YK500XC -	[ ]	-	[ ]	-	RCX340-4	-	[ ]	-	[ ]	-	[ ]	-	[ ]	-	[ ]	-	[ ]	-	[ ]
Model	Z axis stroke		Cable length		Controller / Number of controllable axes		Safety standard		Option A (OP.A)		Option B (OP.B)		Option C (OP.C)		Option D (OP.D)		Option E (OP.E)		Absolute battery
	200: 200mm 300: 300mm		3L: 3.5m 5L: 5m 10L: 10m																

Specify various controller setting items. RCX340 ▶ P.636

Basic specifications

		X axis	Y axis	Z axis		R axis
Axis specifications	Arm length (mm)	250	250	200	300	–
	Rotation angle (˚)	+/-120	+/-142	–		+/-180
AC servo motor output (W)		400	200	200		100
Repeatability Note 1 (XYZ: mm) (R: ˚)		+/-0.02		+/-0.01		+/-0.005
Maximum speed (XYZ: m/sec) (R: ˚/sec)		4.9		1.7		876
Maximum payload (kg)		10				
Standard cycle time: with 2kg payload (sec)		0.53				
R-axis tolerable moment of inertia Note 2 (kgm^2)		0.12				
User wiring (sq × wires)		0.2 × 20				
User tubing (Outer diameter)		ϕ6 × 3				
Travel limit		1.Soft limit, 2.Mechanical stopper (X, Y, Z axes)				
Robot cable length (m)		Standard: 3.5 Option: 5, 10				
Weight (kg)		31				
Degree of cleanliness		CLASS 10 Note 3				
Intake air (Nℓ/min)		60 Note 4				

Note 1. This is the value at a constant ambient temperature. (X,Y axes)
Note 2. The acceleration coefficient is set automatically in accordance with the tip weight and R-axis moment of inertia settings.
Note 3. Per 1cf (0.1μm base), when suction blower is used.
Note 4. The necessary intake amount varies depending on the use conditions and environment.

Controller

Controller	Power capacity (VA)	Operation method
RCX340	1500	Programming / I/O point trace / Remote command / Operation using RS-232C communication

Note. The movement range can be limited by changing the positions of X and Y axis mechanical stoppers. (The movement range is set to the maximum at the time of shipment.)
See our robot manuals (installation manuals) for detailed information.

Our robot manuals (installation manuals) can be downloaded from our website at the address below:
https://global.yamaha-motor.com/business/robot/

YK500XC

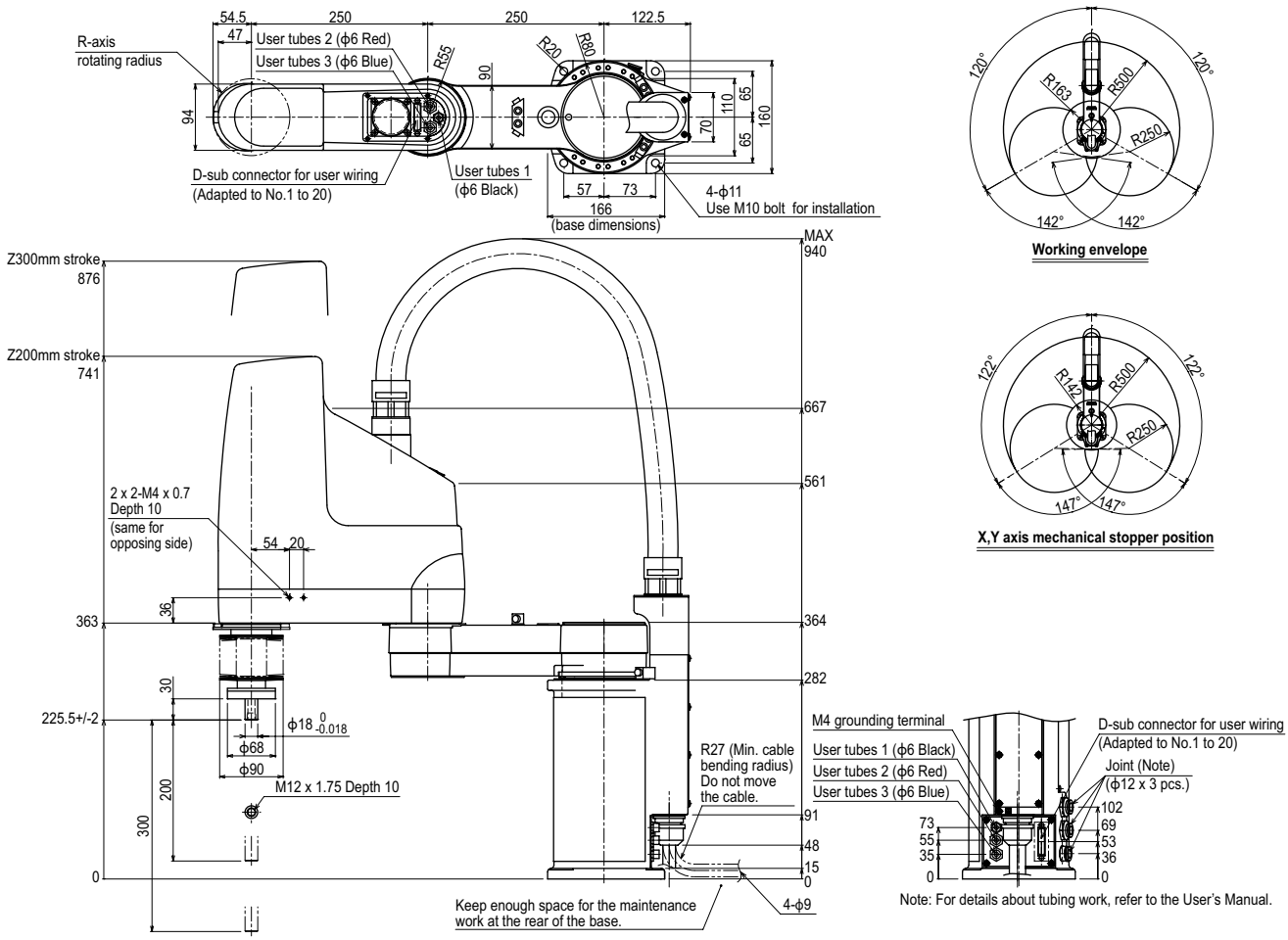

Note: For details about tubing work, refer to the User's Manual.

Controller RCX340 ▶ 636

YK510XEC-10

Clean type: Medium type

LOW COST HIGH PERFORMANCE MODEL

Arm length 510mm **Maximum payload 10kg**

Ordering method

YK510XEC	- 10	- 200	-		-		- RCX340-4	-		-
Model	Maximum payload	Z axis stroke	Tool flange	Brake release switch	Cable length	Controller / Number of controllable axes	Safety standard	Option A to E (OP.A to E)	Absolute battery
			No entry: None F: With tool flange	No entry: None BS: With brake release switch	3L: 3.5m 5L: 5m 10L: 10m				

Specify various controller setting items. RCX340 ▶ P.636

Basic specifications

			X axis	Y axis	Z axis	R axis
Axis specifications	Arm length (mm)		235	275	200	–
	Rotation angle (˚)		+/-134	+/-147.5	–	+/-360
AC servo motor output (W)			400	200	200	200
Deceleration mechanism	Transmission method	Motor to speed reducer	Direct-coupled		Timing belt	
		Speed reducer to output	Direct-coupled			Timing belt
Repeatability Note 1 (XYZ: mm) (R: ˚)			+/-0.01		+/-0.01	+/-0.01
Maximum speed (XYZ: m/sec) (R: ˚/sec)			7.8		2	2600
Maximum payload (kg)			10 kg (Standard specification) 9 kg (With tool flange)			
Standard cycle time: with 2kg payload (sec) Note 2			0.42			
R-axis tolerable moment of inertia Note 3 (kgm^2)			0.3			
User wiring (sq × wires)			0.2×20			
User tubing (Outer diameter)			ϕ6×3			
Travel limit			1.Soft limit, 2.Mechanical stopper (X, Y, Z axes)			
Robot cable length (m)			Standard: 3.5 Option: 5, 10			
Weight (kg)			27			
Degree of cleanliness			ISO CLASS 4 (ISO 14644-1)			
Intake air (Nℓ/min)			60 Note 4			

Note 1. This is the value at a constant ambient temperature. (X,Y axes)
Note 2. When reciprocating 300mm in horizontal and 25mm in vertical directions and performing the coarse positioning arch operation.
Note 3. The acceleration coefficient is set automatically in accordance with the tip weight and R-axis moment of inertia settings.
Note 4. Set within the range of ±1Nℓ/min. When the suction volume is not appropriate, it may adversely affect the cleanliness degree or deform the bellows.

Controller

Controller	Power capacity (VA)	Operation method
RCX340	1700	Programming / I/O point trace / Remote command / Operation using RS-232C communication

Note. User wiring/tubing can be passed through from the top to the tip of the Z-axis shaft. For details, see the manual (installation manual).
Note. The movement range can be restricted by adding the X- and Y-axis mechanical stoppers. (The maximum movement range was set at shipment.) See our robot manuals (installation manuals) for detailed information.
Note. To set the standard coordinates with high accuracy, use a standard coordinate setting jig (option). Refer to the user's manual (installation manual) for more details.

Our robot manuals (installation manuals) can be downloaded from our website at the address below:
https://global.yamaha-motor.com/business/robot/

YK510 XEC-10

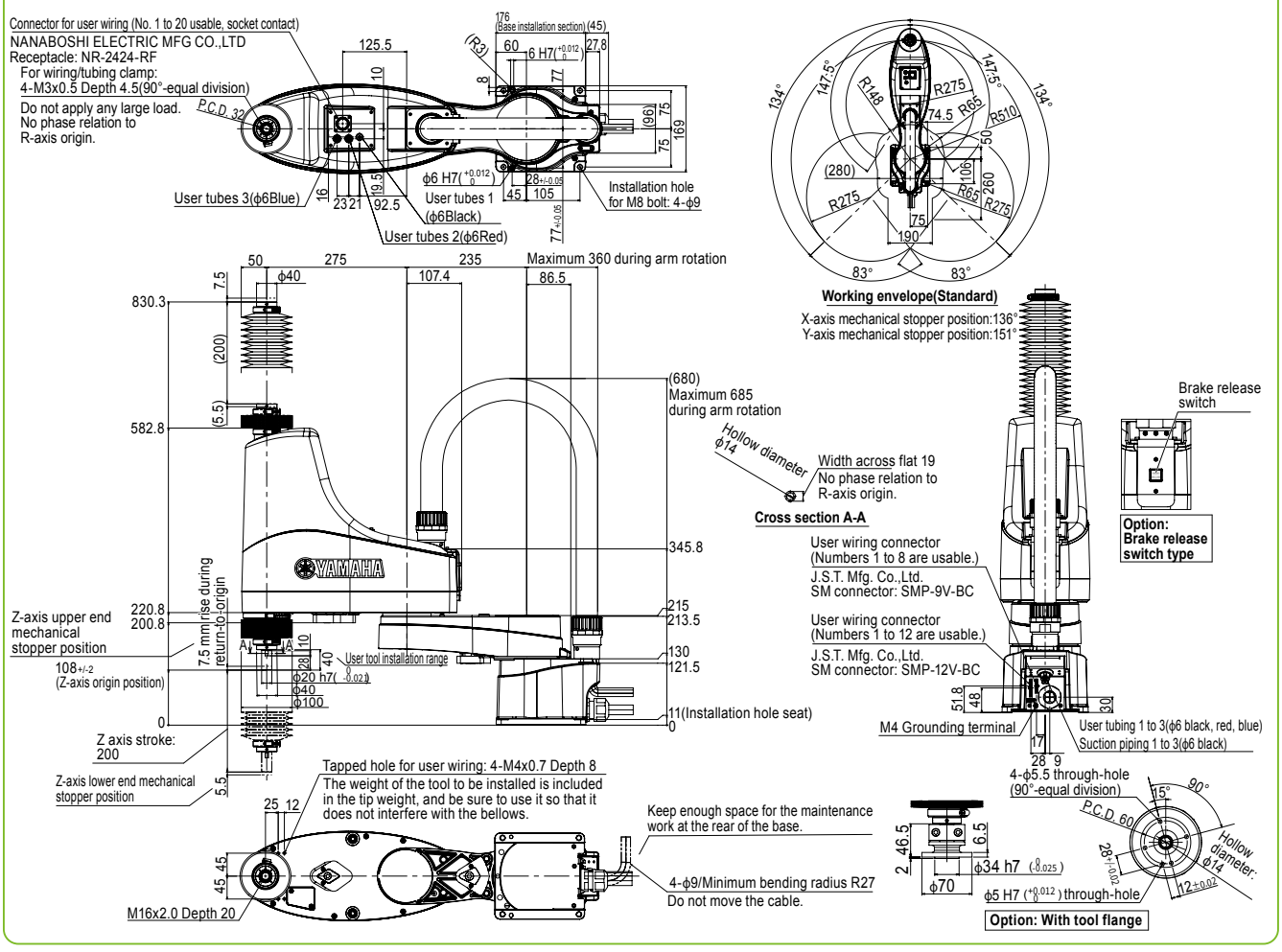

Controller RCX340 ▶ 636

YK600XGLC

Clean type: Medium type

- Arm length 600mm
- Maximum payload 4kg

Ordering method

YK600XGLC - 150	-		- S	-		- RCX340-4	-							
Model	Z axis stroke	Tool flange	Hollow shaft	Cable length	Controller / Number of controllable axes	Safety standard	Option A (OP.A)	Option B (OP.B)	Option C (OP.C)	Option D (OP.D)	Option E (OP.E)	Absolute battery
	150: 150mm	No entry: None F: With tool flange	S: With hollow shaft	3L: 3.5m 5L: 5m 10L: 10m								

Specify various controller setting items. RCX340 ▶ P636

Basic specifications

		X axis	Y axis	Z axis	R axis
Axis specifications	Arm length (mm)	350	250	150	–
	Rotation angle (°)	+/-129	+/-144	–	+/-360
AC servo motor output (W)		200	150	50	100
Repeatability Note 1 (XYZ: mm) (R: °)		+/-0.01		+/-0.01	+/-0.004
Maximum speed (XYZ: m/sec) (R: °/sec)		4.9		1.1	1020
Maximum payload (kg)		4			
Standard cycle time: with 2kg payload (sec) Note 2		0.71			
R-axis tolerable moment of inertia Note 3 (kgm^2)		0.05			
User wiring (sq × wires)		0.2×10			
User tubing (Outer diameter)		ϕ4×4			
Travel limit		1.Soft limit, 2.Mechanical stopper (X, Y, Z axes)			
Robot cable length (m)		Standard: 3.5 Option: 5, 10			
Weight (kg)		26			
Degree of cleanliness		ISO CLASS 3 (ISO 14644-1) Note 4 +ESD Note 5			
Intake air (Nℓ/min)		30 Note 6			

Note 1. This is the value at a constant ambient temperature. (X,Y axes)
Note 2. When reciprocating 25mm in vertical direction and 300mm in horizontal direction (rough-positioning arch motion).
Note 3. The acceleration coefficient is set automatically in accordance with the tip weight and R-axis moment of inertia settings.
Note 4. ESD (ElectroStatic discharge) specifications are custom-ordered. Please contact our distributor.
Note 5. The necessary intake amount varies depending on the use conditions and environment.

Controller

Controller	Power capacity (VA)	Operation method
RCX340	1000	Programming / I/O point trace / Remote command / Operation using RS-232C communication

Note. The movement range can be limited by changing the positions of X and Y axis mechanical stoppers. (The movement range is set to the maximum at the time of shipment.)
See our robot manuals (installation manuals) for detailed information.
Note. To set the standard coordinates with high accuracy, use a standard coordinate setting jig (option). Refer to the user's manual (installation manual) for more details.

Our robot manuals (installation manuals) can be downloaded from our website at the address below:
https://global.yamaha-motor.com/business/robot/

YK600XGLC

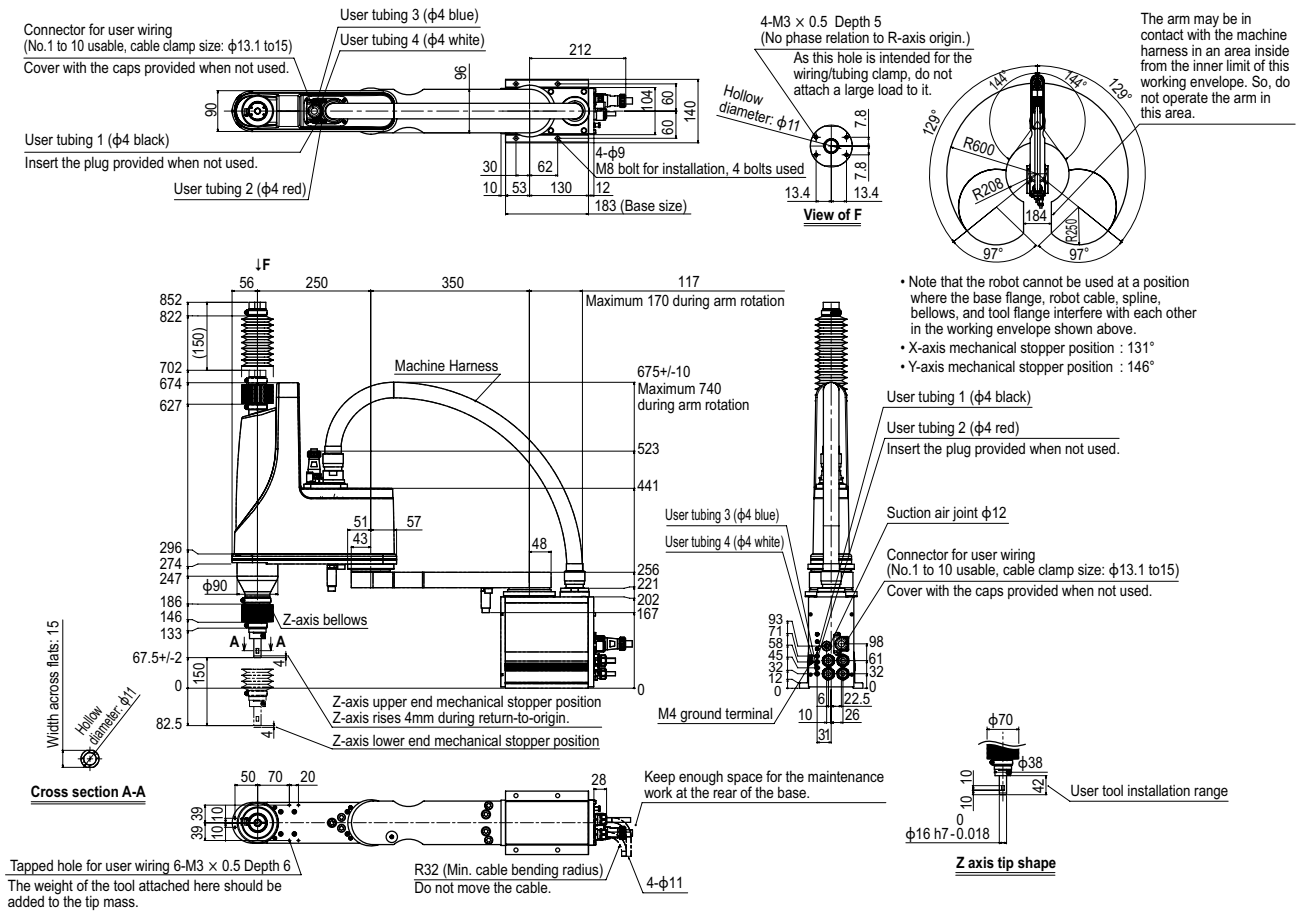

Controller RCX340 ▶ 636

YK600XGLC

YK600XGLC Tool flange mount type

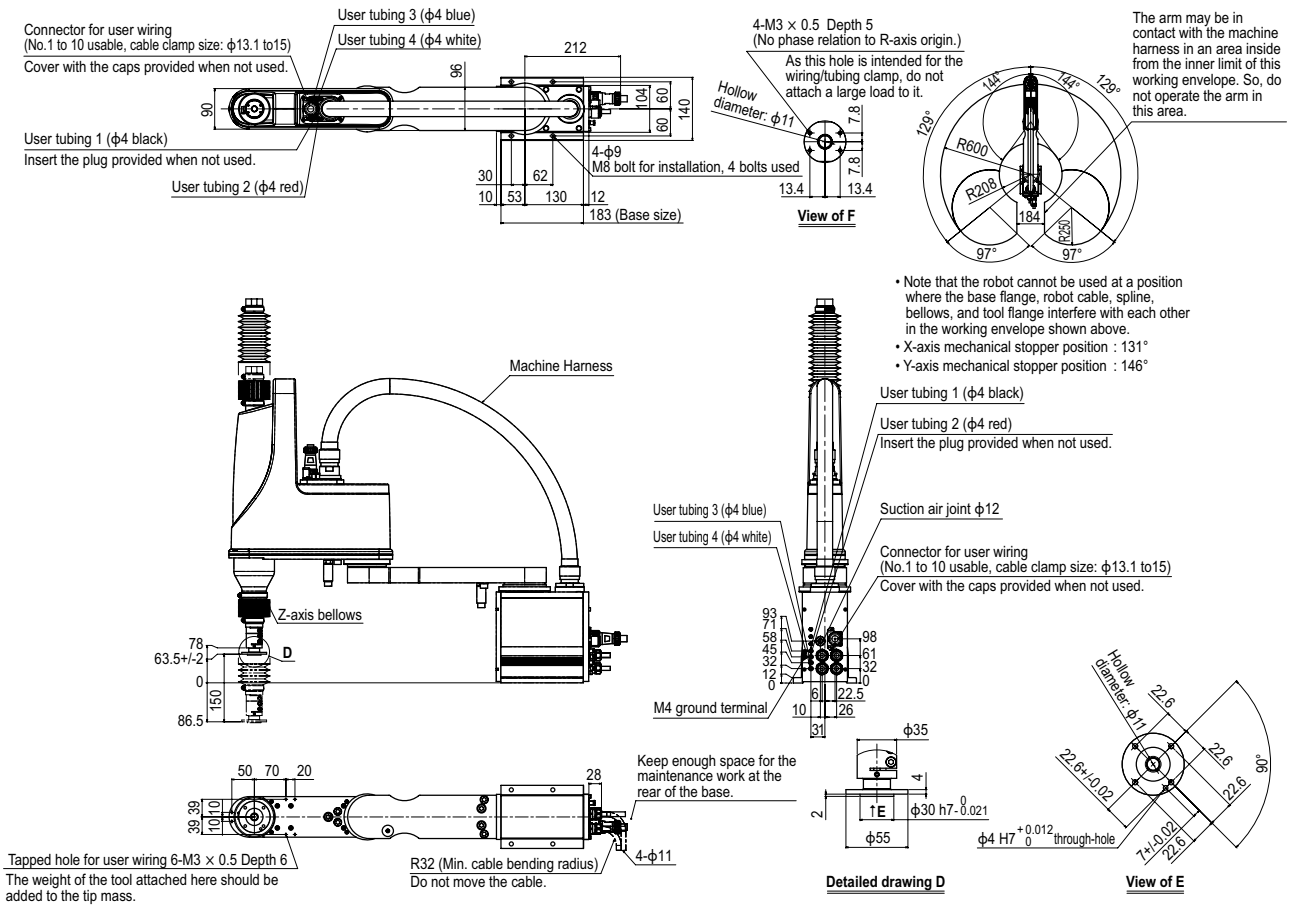

YK600XC

Clean type: Medium type

- Arm length 600mm
- Maximum payload 10kg

Ordering method

YK600XC -	[ ] -	[ ] -	RCX340-4 -	[ ] -	[ ] -	[ ] -	[ ] -	[ ] -	[ ] -	[ ]
Model	Z axis stroke	Cable length	Controller / Number of controllable axes	Safety standard	Option A (OP.A)	Option B (OP.B)	Option C (OP.C)	Option D (OP.D)	Option E (OP.E)	Absolute battery
	200: 200mm 300: 300mm	3L: 3.5m 5L: 5m 10L: 10m								

Specify various controller setting items. RCX340 ▶ P.636

Basic specifications

		X axis	Y axis	Z axis		R axis
Axis specifications	Arm length (mm)	350	250	200	300	–
	Rotation angle (°)	+/-120	+/-145	–		+/-180
AC servo motor output (W)		400	200	200		100
Repeatability Note 1 (XYZ: mm) (R: °)		+/-0.02		+/-0.01		+/-0.005
Maximum speed (XYZ: m/sec) (R: °/sec)		5.6		1.7		876
Maximum payload (kg)		10				
Standard cycle time: with 2kg payload (sec)		0.56				
R-axis tolerable moment of inertia Note 2 (kgm^2)		0.12				
User wiring (sq × wires)		0.2 × 20				
User tubing (Outer diameter)		ϕ6 × 3				
Travel limit		1.Soft limit, 2.Mechanical stopper (X, Y, Z axes)				
Robot cable length (m)		Standard: 3.5 Option: 5, 10				
Weight (kg)		33				
Degree of cleanliness		CLASS 10 Note 3				
Intake air (Nℓ/min)		60 Note 4				

Note 1. This is the value at a constant ambient temperature. (X,Y axes)
Note 2. The acceleration coefficient is set automatically in accordance with the tip weight and R-axis moment of inertia settings.
Note 3. Per 1cf (0.1μm base), when suction blower is used.
Note 4. The necessary intake amount varies depending on the use conditions and environment.

Controller

Controller	Power capacity (VA)	Operation method
RCX340	1500	Programming / I/O point trace / Remote command / Operation using RS-232C communication

Note. The movement range can be limited by changing the positions of X and Y axis mechanical stoppers. (The movement range is set to the maximum at the time of shipment.)
See our robot manuals (installation manuals) for detailed information.

Our robot manuals (installation manuals) can be downloaded from our website at the address below:
https://global.yamaha-motor.com/business/robot/

YK600XC

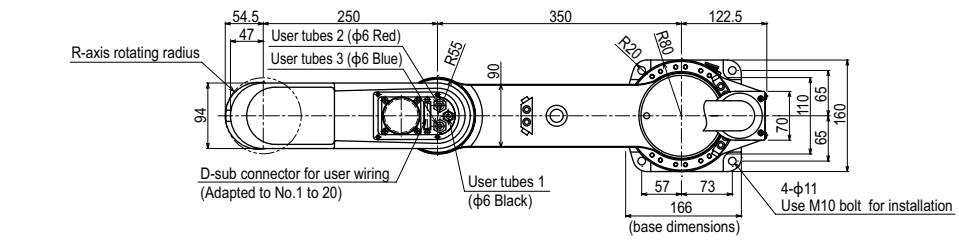

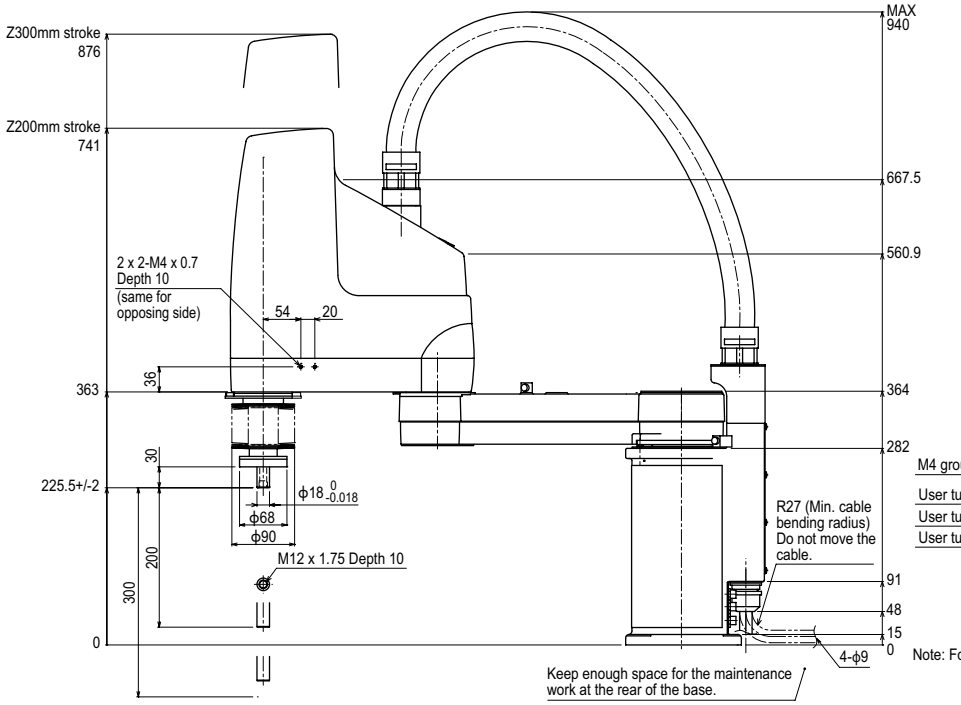

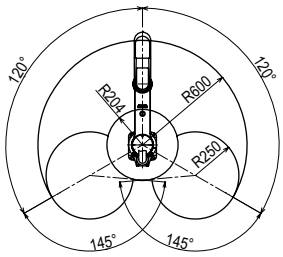

Working envelope

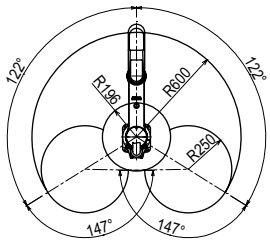

X,Y axis mechanical stopper position

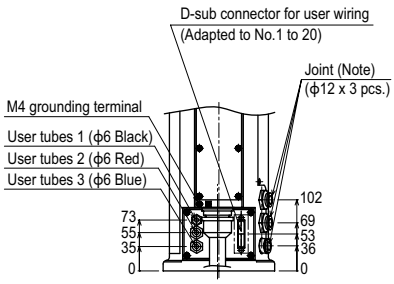

Note: For details about tubing work, refer to the User's Manual.

Controller RCX340 ▶ 636

YK610XEC-10

Clean type: Medium type

LOW COST HIGH PERFORMANCE MODEL

Arm length 610mm **Maximum payload 10kg**

Ordering method

YK610XEC	-	10	-	200	-		-		-		-	RCX340-4	-		-	
Model	-	Maximum payload	-	Z axis stroke	-	Tool flange	-	Brake release switch	-	Cable length	-	Controller / Number of controllable axes	-	Safety standard	-	Option A to E (OP.A to E)	-	Absolute battery
						No entry: None F: With tool flange		No entry: None BS: With brake release switch		3L: 3.5m 5L: 5m 10L: 10m							

Specify various controller setting items. RCX340 ▶ P.636

Basic specifications

			X axis	Y axis	Z axis	R axis
Axis specifications	Arm length (mm)		335	275	200	–
	Rotation angle (˚)		+/-134	+/-147.5	–	+/-360
AC servo motor output (W)			400	200	200	200
Deceleration mechanism	Transmission method	Motor to speed reducer	Direct-coupled		Timing belt	
		Speed reducer to output	Direct-coupled			Timing belt
Repeatability Note 1 (XYZ: mm) (R: ˚)			+/-0.01		+/-0.01	+/-0.01
Maximum speed (XYZ: m/sec) (R: ˚/sec)			8.6		2	2600
Maximum payload (kg)			10 kg (Standard specification) 9 kg (With tool flange)			
Standard cycle time: with 2kg payload (sec) Note 2			0.44			
R-axis tolerable moment of inertia Note 3 (kgm^2)			0.3			
User wiring (sq × wires)			0.2×20			
User tubing (Outer diameter)			ϕ6×3			
Travel limit			1.Soft limit, 2.Mechanical stopper (X, Y, Z axes)			
Robot cable length (m)			Standard: 3.5 Option: 5, 10			
Weight (kg)			27			
Degree of cleanliness			ISO CLASS 4 (ISO 14644-1)			
Intake air (Nℓ/min)			60 Note 4			

Note 1. This is the value at a constant ambient temperature. (X,Y axes)
Note 2. When reciprocating 300mm in horizontal and 25mm in vertical directions and performing the coarse positioning arch operation.
Note 3. The acceleration coefficient is set automatically in accordance with the tip weight and R-axis moment of inertia settings.
Note 4. Set within the range of ±1Nℓ/min. When the suction volume is not appropriate, it may adversely affect the cleanliness degree or deform the bellows.

Controller

Controller	Power capacity (VA)	Operation method
RCX340	1700	Programming / I/O point trace / Remote command / Operation using RS-232C communication

Note. User wiring/tubing can be passed through from the top to the tip of the Z-axis shaft. For details, see the manual (installation manual).
Note. The movement range can be restricted by adding the X- and Y-axis mechanical stoppers. (The maximum movement range was set at shipment.)
See our robot manuals (installation manuals) for detailed information.
Note. To set the standard coordinates with high accuracy, use a standard coordinate setting jig (option). Refer to the user's manual (installation manual) for more details.

Our robot manuals (installation manuals) can be downloaded from our website at the address below:
https://global.yamaha-motor.com/business/robot/

YK610 XEC-10

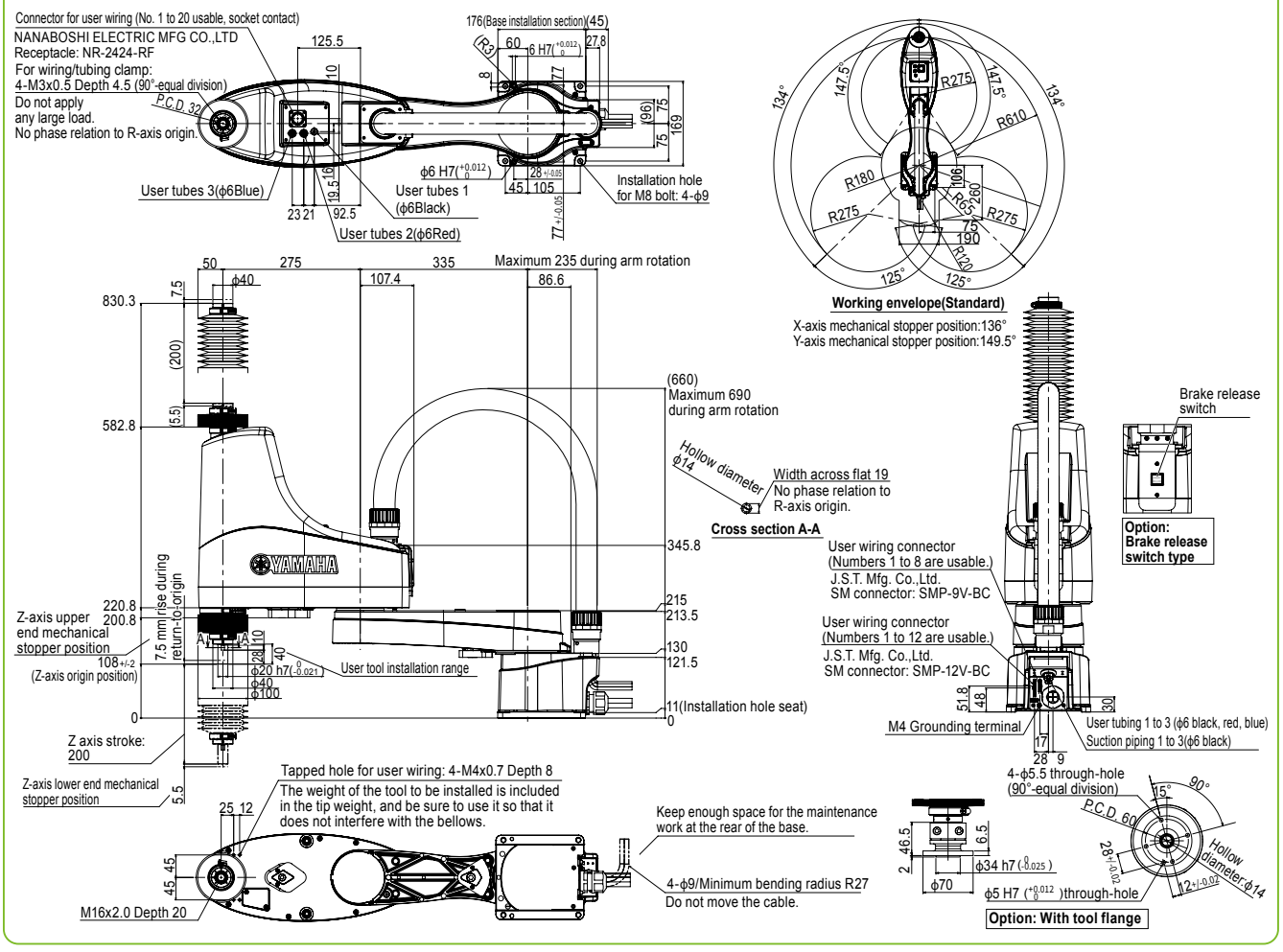

Controller RCX340 ▶ 636

YK700XC

Clean type: Large type

- Arm length 700mm
- Maximum payload 20kg

Ordering method

YK700XC -	[ ] -	[ ] -	RCX340-4 -	[ ] -	[ ] -	[ ] -	[ ] -	[ ] -	[ ] -	[ ] -	[ ]
Model	Z axis stroke	Cable length	Controller / Number of controllable axes	Safety standard	Option A (OP.A)	Option B (OP.B)	Option C (OP.C)	Option D (OP.D)	Option E (OP.E)	Absolute battery
	200: 200mm 400: 400mm	3L: 3.5m 5L: 5m 10L: 10m								

Specify various controller setting items. RCX340 ▶ P636

Basic specifications

		X axis	Y axis	Z axis		R axis
Axis specifications	Arm length (mm)	350	350	200	400	–
	Rotation angle (˚)	+/-120	+/-145	–		+/-180
AC servo motor output (W)		800	400	400		200
Repeatability Note 1 (XYZ: mm) (R: ˚)		+/-0.02		+/-0.01		+/-0.005
Maximum speed (XYZ: m/sec) (R: ˚/sec)		6.7		1.7		600
Maximum payload (kg)		20				
Standard cycle time: with 2kg payload (sec)		0.57				
R-axis tolerable moment of inertia Note 2 (kgm^2)		0.32				
User wiring (sq × wires)		0.2 × 20				
User tubing (Outer diameter)		ϕ6 × 3				
Travel limit		1.Soft limit, 2.Mechanical stopper (X, Y, Z axes)				
Robot cable length (m)		Standard: 3.5 Option: 5, 10				
Weight (kg)		57				
Degree of cleanliness		CLASS 10 Note 3				
Intake air (Nℓ/min)		60 Note 4				

Note 1. This is the value at a constant ambient temperature. (X,Y axes)
Note 2. The acceleration coefficient is set automatically in accordance with the tip weight and R-axis moment of inertia settings.
Note 3. Per 1cf (0.1μm base), when suction blower is used.
Note 4. The necessary intake amount varies depending on the use conditions and environment.

Controller

Controller	Power capacity (VA)	Operation method
RCX340	2000	Programming / I/O point trace / Remote command / Operation using RS-232C communication

Note. The movement range can be limited by changing the positions of X and Y axis mechanical stoppers. (The movement range is set to the maximum at the time of shipment.)
See our robot manuals (installation manuals) for detailed information.

Our robot manuals (installation manuals) can be downloaded from our website at the address below:
https://global.yamaha-motor.com/business/robot/

YK700XC

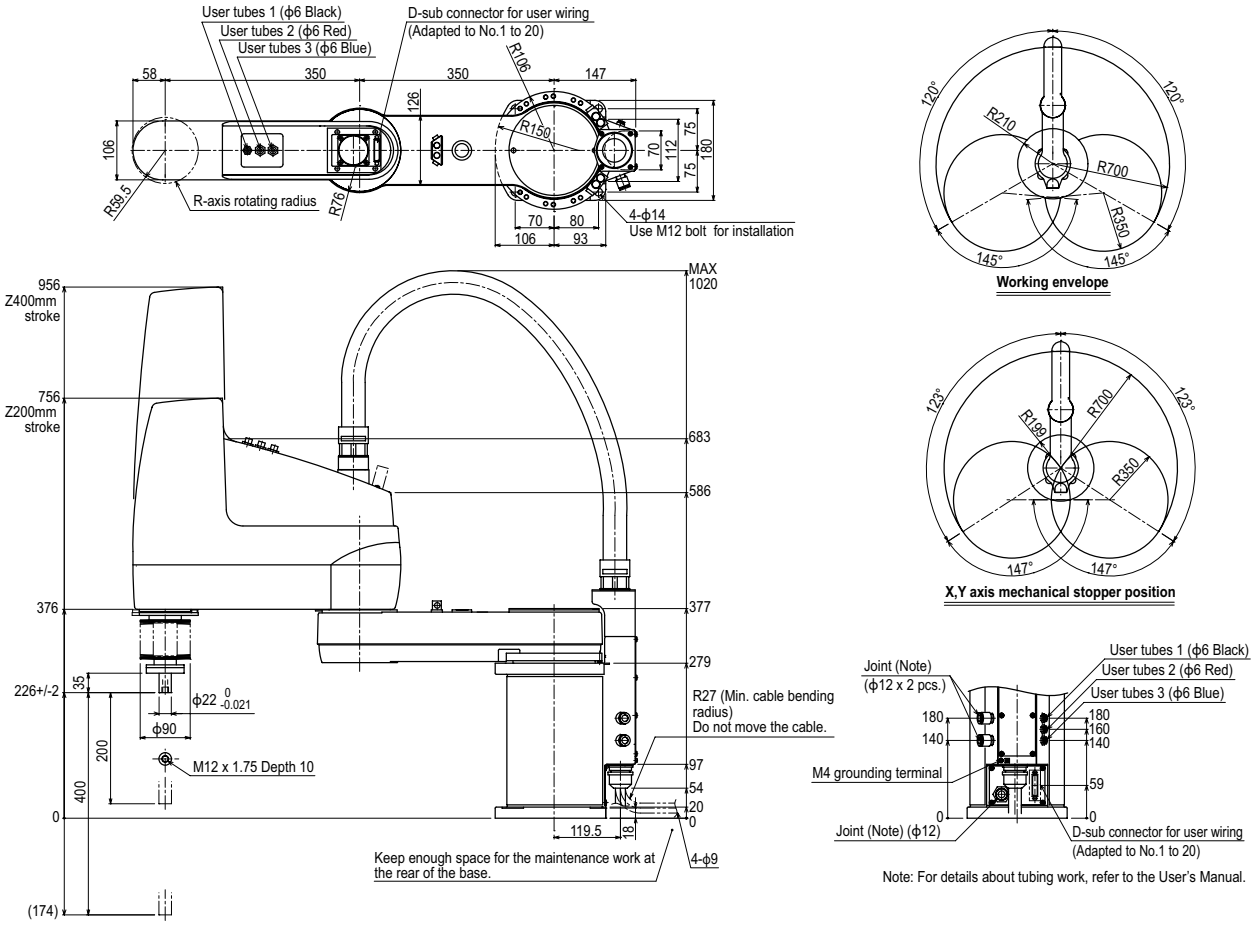

Note: For details about tubing work, refer to the User's Manual.

Controller RCX340 ▶ 636

YK710XEC-10

Clean type: Large type

LOW COST HIGH PERFORMANCE MODEL

Arm length 710mm **Maximum payload 10kg**

Ordering method

YK710XEC - 10 - 200 - [ ] - [ ] - [ ] - RCX340-4 - [ ] - [ ] - [ ]

Model	Maximum payload	Z axis stroke	Tool flange	Brake release switch	Cable length	Controller / Number of controllable axes	Safety standard	Option A to E (OP.A to E)	Absolute battery
			No entry: None F: With tool flange	No entry: None BS: With brake release switch	3L: 3.5m 5L: 5m 10L: 10m				

Specify various controller setting items. RCX340 ▶ P.636

Basic specifications

			X axis	Y axis	Z axis	R axis
Axis specifications	Arm length (mm)		435	275	200	–
	Rotation angle (˚)		+/-134	+/-147.5	–	+/-360
AC servo motor output (W)			400	200	200	200
Deceleration mechanism	Transmission method	Motor to speed reducer	Direct-coupled		Timing belt	
		Speed reducer to output	Direct-coupled			Timing belt
Repeatability Note 1 (XYZ: mm) (R: ˚)			+/-0.01		+/-0.01	+/-0.01
Maximum speed (XYZ: m/sec) (R: ˚/sec)			9.5		2	2600
Maximum payload (kg)			10 kg (Standard specification) 9 kg (With tool flange)			
Standard cycle time: with 2kg payload (sec) Note 2			0.49			
R-axis tolerable moment of inertia Note 3 (kgm^2)			0.3			
User wiring (sq × wires)			0.2×20			
User tubing (Outer diameter)			ϕ6×3			
Travel limit			1.Soft limit, 2.Mechanical stopper (X, Y, Z axes)			
Robot cable length (m)			Standard: 3.5 Option: 5, 10			
Weight (kg)			28			
Degree of cleanliness			ISO CLASS 4 (ISO 14644-1)			
Intake air (Nℓ/min)			60 Note 4			

Note 1. This is the value at a constant ambient temperature. (X,Y axes)
Note 2. When reciprocating 300mm in horizontal and 25mm in vertical directions and performing the coarse positioning arch operation.
Note 3. The acceleration coefficient is set automatically in accordance with the tip weight and R-axis moment of inertia settings.
Note 4. Set within the range of ±1Nℓ/min. When the suction volume is not appropriate, it may adversely affect the cleanliness degree or deform the bellows.

Controller

Controller	Power capacity (VA)	Operation method
RCX340	1700	Programming / I/O point trace / Remote command / Operation using RS-232C communication

Note. User wiring/tubing can be passed through from the top to the tip of the Z-axis shaft. For details, see the manual (installation manual).
Note. The movement range can be restricted by adding the X- and Y-axis mechanical stoppers. (The maximum movement range was set at shipment.)
See our robot manuals (installation manuals) for detailed information.
Note. To set the standard coordinates with high accuracy, use a standard coordinate setting jig (option). Refer to the user's manual (installation manual) for more details.

Our robot manuals (installation manuals) can be downloaded from our website at the address below:
https://global.yamaha-motor.com/business/robot/

YK710 XEC-10

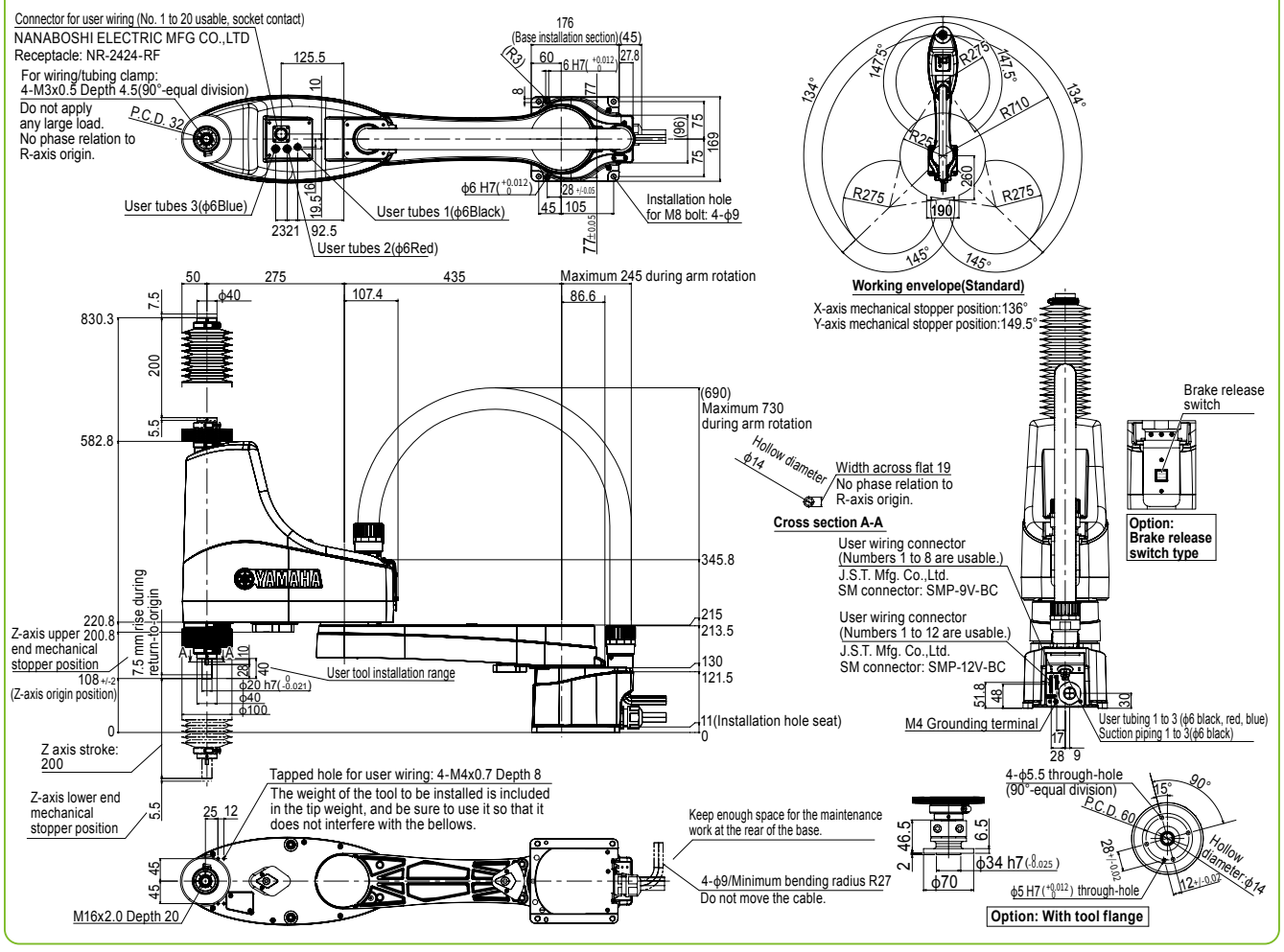

Controller RCX340 ▶ 636

YK800XC

Clean type: Large type

- Arm length 800mm
- Maximum payload 20kg

Ordering method

YK800XC -	[ ] -	[ ] -	RCX340-4 -	[ ] -	[ ] -	[ ] -	[ ] -	[ ] -	[ ] -	[ ] -	[ ]
Model	Z axis stroke	Cable length	Controller / Number of controllable axes	Safety standard	Option A (OP.A)	Option B (OP.B)	Option C (OP.C)	Option D (OP.D)	Option E (OP.E)	Absolute battery
	200: 200mm 400: 400mm	3L: 3.5m 5L: 5m 10L: 10m								

Specify various controller setting items. RCX340 ▶ P636

Basic specifications

		X axis	Y axis	Z axis		R axis
Axis specifications	Arm length (mm)	450	350	200	400	–
	Rotation angle (˚)	+/-120	+/-145	–		+/-180
AC servo motor output (W)		800	400	400		200
Repeatability Note 1 (XYZ: mm) (R: ˚)		+/-0.02		+/-0.01		+/-0.005
Maximum speed (XYZ: m/sec) (R: ˚/sec)		7.3		1.7		600
Maximum payload (kg)		20				
Standard cycle time: with 2kg payload (sec)		0.57				
R-axis tolerable moment of inertia Note 2 (kgm^2)		0.32				
User wiring (sq × wires)		0.2 × 20				
User tubing (Outer diameter)		ϕ6 × 3				
Travel limit		1.Soft limit, 2.Mechanical stopper (X, Y, Z axes)				
Robot cable length (m)		Standard: 3.5 Option: 5, 10				
Weight (kg)		58				
Degree of cleanliness		CLASS 10 Note 3				
Intake air (Nℓ/min)		60 Note 4				

Note 1. This is the value at a constant ambient temperature. (X,Y axes)
Note 2. The acceleration coefficient is set automatically in accordance with the tip weight and R-axis moment of inertia settings.
Note 3. Per 1cf (0.1μm base), when suction blower is used.
Note 4. The necessary intake amount varies depending on the use conditions and environment.

Controller

Controller	Power capacity (VA)	Operation method
RCX340	2000	Programming / I/O point trace / Remote command / Operation using RS-232C communication

Note. The movement range can be limited by changing the positions of X and Y axis mechanical stoppers. (The movement range is set to the maximum at the time of shipment.)
See our robot manuals (installation manuals) for detailed information.

Our robot manuals (installation manuals) can be downloaded from our website at the address below:
https://global.yamaha-motor.com/business/robot/

YK800XC

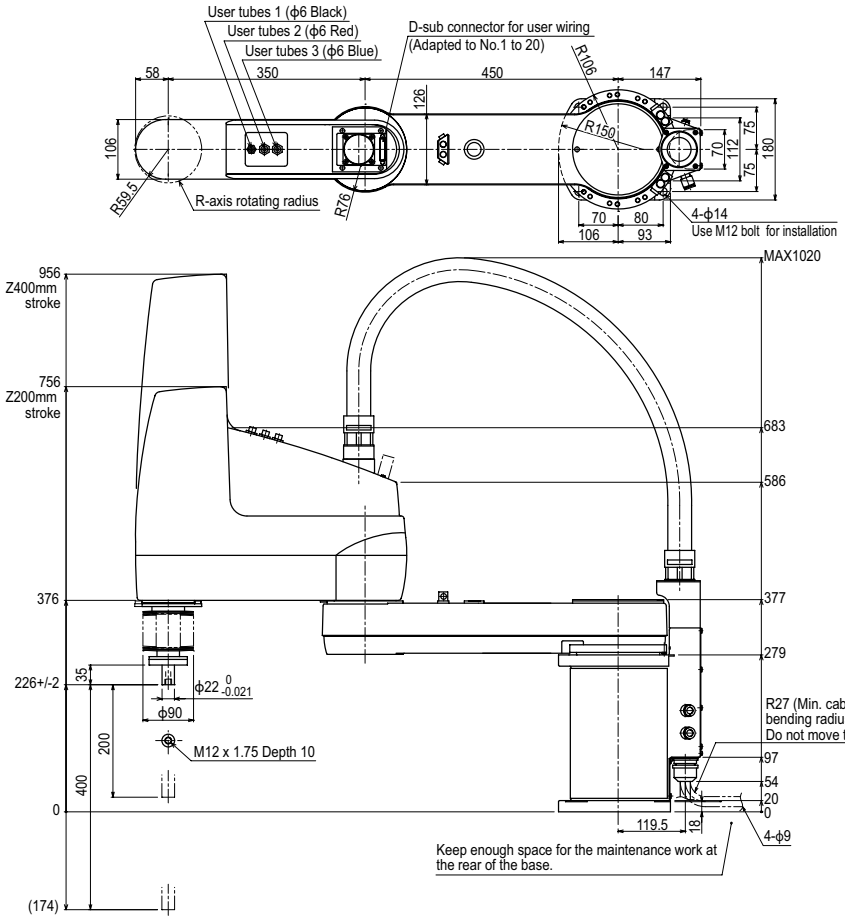

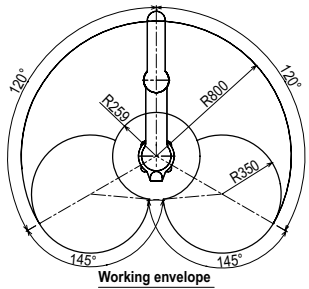

Working envelope

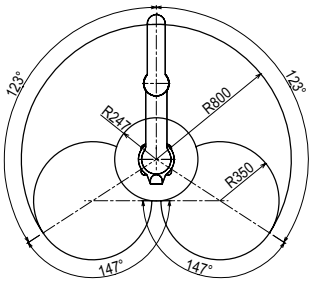

X,Y axis mechanical stopper position

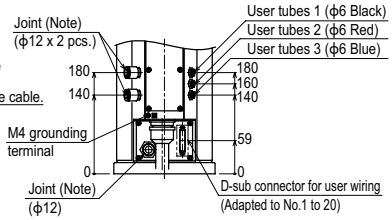

Note: For details about tubing work, refer to the User's Manual.

Controller RCX340 ▶ 636

YK1000XC

Clean type: Large type

- Arm length 1000mm
- Maximum payload 20kg

Ordering method

YK1000XC	-		-		-	RCX340-4	-		-		-		-		-		-		-	
Model	-	Z axis stroke	-	Cable length	-	Controller / Number of controllable axes	-	Safety standard	-	Option A (OP.A)	-	Option B (OP.B)	-	Option C (OP.C)	-	Option D (OP.D)	-	Option E (OP.E)	-	Absolute battery
		200: 200mm 400: 400mm		3L: 3.5m 5L: 5m 10L: 10m																

Specify various controller setting items. RCX340 ▶ P.636

Basic specifications

		X axis	Y axis	Z axis		R axis
Axis specifications	Arm length (mm)	550	450	200	400	–
	Rotation angle (°)	+/-120	+/-145	–		+/-180
AC servo motor output (W)		800	400	400		200
Repeatability Note 1 (XYZ: mm) (R: °)		+/-0.02		+/-0.01		+/-0.005
Maximum speed (XYZ: m/sec) (R: °/sec)		8.0		1.7		600
Maximum payload (kg)		20				
Standard cycle time: with 2kg payload (sec)		0.60				
R-axis tolerable moment of inertia Note 2 (kgm^2)		0.32				
User wiring (sq × wires)		0.2 × 20				
User tubing (Outer diameter)		ϕ6 × 3				
Travel limit		1.Soft limit, 2.Mechanical stopper (X, Y, Z axes)				
Robot cable length (m)		Standard: 3.5 Option: 5, 10				
Weight (kg)		59				
Degree of cleanliness		CLASS 10 Note 3				
Intake air (Nℓ/min)		60 Note 4				

Note 1. This is the value at a constant ambient temperature. (X,Y axes)
Note 2. The acceleration coefficient is set automatically in accordance with the tip weight and R-axis moment of inertia settings.
Note 3. Per 1cf (0.1μm base), when suction blower is used.
Note 4. The necessary intake amount varies depending on the use conditions and environment.

Controller

Controller	Power capacity (VA)	Operation method
RCX340	2000	Programming / I/O point trace / Remote command / Operation using RS-232C communication

Note. The movement range can be limited by changing the positions of X and Y axis mechanical stoppers. (The movement range is set to the maximum at the time of shipment.)
See our robot manuals (installation manuals) for detailed information.

Our robot manuals (installation manuals) can be downloaded from our website at the address below:
https://global.yamaha-motor.com/business/robot/

YK1000XC

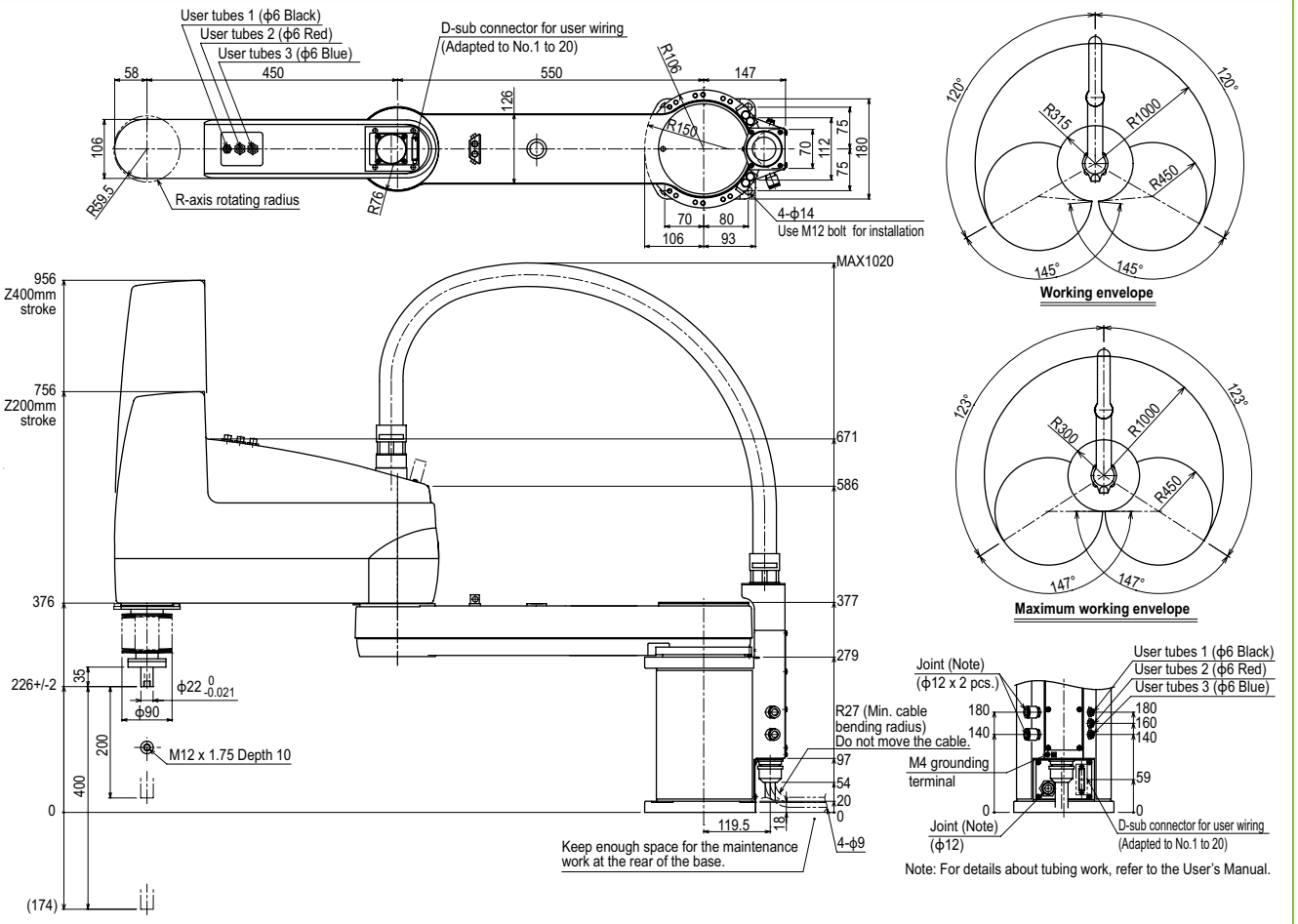

Note: For details about tubing work, refer to the User's Manual.

Controller RCX340 ▶ 636