YAMAHA

PARTS CATALOGUE

G31APS (JB64) HONG KONG

1UJB6-417E1

( )

YAMAHA GENUINE Parts & Accessories

NEWS No.	DATE	COMMENT
PE0-GC-200017	Oct.,23, 2020	MOD:FIG.6 INTAKE 2 LIST/ILLUST. REVISION

2021/02/08

G31APS
PARTS CATALOGUE
©2021 by Yamaha Motor Co., Ltd.
1st edition, February 2021
All rights reserved.
Any reprinting or unauthorized use
without the written permission of
Yamaha Motor Co., Ltd.
is expressly prohibited.
Printed in Japan.

FOREWORD

This Parts Catalogue is related to the parts for the model(s) on the cover page. When you are ordering replacement parts, please refer to this Parts Catalogue and quote both part numbers and part names correctly.

1. Modifications or additions which have been made after the issue of the Parts Catalogue will be announced in the Parts News.
   It is advisable that you make the necessary corrections to the Parts Catalogue according to the Parts News.

2. Abbreviations
   The following abbreviations are used in this Parts Catalogue.

   "UR" Use specified parts number.

   "UN" Use as many as needed.

   "AP" Alternate Parts

   "LM" Locally Made (Parts need to be ordered locally)

   "F#" Frame No. (Applicable machine No.)

   "O/S" Over Size

3. The number of components for assembly
   - Parts, which are to be supplied in an assembly, are listed with a dot (.) in front of the part name as shown below.
   - The numeral appearing to the right of each component part indicates the quantity of parts for each assembly unit.

PART NO.	DESCRIPTION	Q'TY	REMARKS
2F5–83310–60	FRONT FLASHER LIGHT ASSY	2	
115–83311–60	.BULB (6V–18W)	1	

4. Applicable colours of graphics are represented in the "REMARKS" as shown below.

PART NO.	DESCRIPTION	Q'TY	REMARKS
2N4–24110–00–X5	FUEL TANK COMP.	2	MXR
3J1–24240–10	.GRAPHIC, FUEL TANK	1	FOR MXR

5. Note that the illustrations for reference in finding parts numbers are not to be used for assembling. When assembling, please use the applicable service manual.

6. The asterisk (*) before a reference number indicates modified items after the first edition.

7. Applicable Serial No.

Engine Serial No.

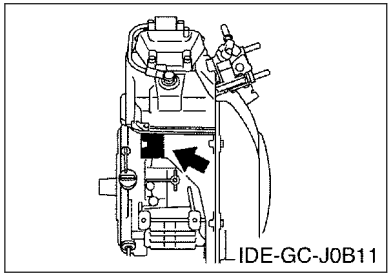

Frame Serial No.

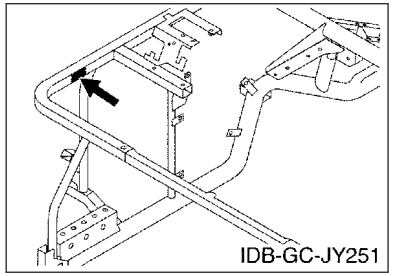

8. Applicable Colour Code (The (*) mark shows Model colour.)

Abbreviation	Colour Name	Colour Code
DNGM3(*)	DARK GRAYISH GREEN METALLIC 3	0712
DPBMC(*)	DEEP PURPLISH BLUE METALLIC C	0564
DRMD(*)	DULL RED METALLIC D	0779
RW(*)	RADICAL WHITE	00UJ
VDGS1(*)	VERY DARK GREEN SOLID 1	0614

9. Quantity Column Information

Column No.	Name Of Q'ty Column	Destination
1	JB64	HONG KONG

10. Applicable Starting Serial No.

Frame Serial No.

Serial No.	Name Of Q'ty Column	Model Code
JB6-450101	JB64	JB64

CONTENTS

ENGINE

CYLINDER HEAD....1
CRANKSHAFT & PISTON....2
CAMSHAFT & VALVE....3
AIR SHROUD & FAN....4
INTAKE 1....5
INTAKE 2....6
EXHAUST....7
CRANKCASE....8

BODY

REAR ARM & SUSPENSION....9
FRAME....10
FRONT SUSPENSION & WHEEL....11
STEERING....13
FUEL TANK....15
BRAKE....16
BRAKE 2....17
BRAKE 3....19
BRAKE 4....21
FRONT MASTER CYLINDER....22
ACCELERATOR....24

DRIVE

PRIMARY SHEAVE....25
SECONDARY SHEAVE....26
TRANSMISSION 1....27
TRANSMISSION 2....30
SHIFTER & CABLES....31
REAR AXLE & WHEEL....32

R/G

WINDSHIELD....33
BUMPER....35
BODY....36
BODY 2....38
BODY FITTING....40
SUN ROOF....41
SEAT....43

ELECTRICAL

STARTING MOTOR....45
CONTROL UNIT....47
ELECTRICAL 1....48
ELECTRICAL 2....50

INDEX

NUMERICAL INDEX....52

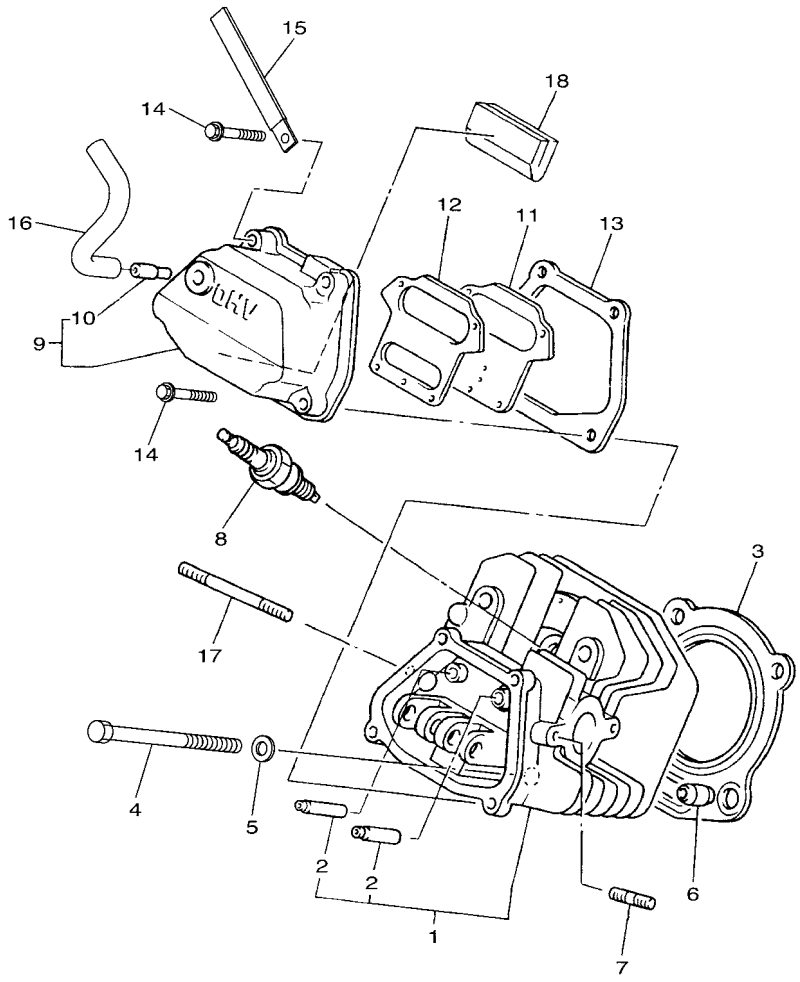

JB62010-S010

FIG. 1 CYLINDER HEAD

REF. NO.	PART NO.	DESCRIPTION	JB64					REMARKS
1	JT0–11111–00	HEAD, CYLINDER 1	1					
2	JN6–11133–10	.GUIDE, VALVE 1	2					
3	JT0–11181–00	GASKET, CYLINDER HEAD 1	1					
4	97012–10070	BOLT	4					
5	90201–10057	WASHER, PLATE	4					
6	99530–14016	PIN, DOWEL	2					
7	95622–08618	BOLT, STUD	2					
8	94702–00348	PLUG, SPARK (NGK-BPR2ES)	1					
9	JN6–11191–01	COVER, CYLINDER HEAD 1	1					
10	JN6–11116–00	.JOINT, BREATHER	1					
11	JN6–11168–00	COVER, BREATHER	1					
12	JN6–11169–00	GASKET, BREATHER COVER	1					
13	JN6–11193–00	GASKET, HEAD COVER 1	1					
14	95822–06030	BOLT, FLANGE	4					
15	90462–05061	CLAMP	1					
16	JB2–11166–01	PIPE, BREATHER 1	1					
17	95602–08710	BOLT, STUD	2					
18	JR7–11163–10	ELEMENT	1					

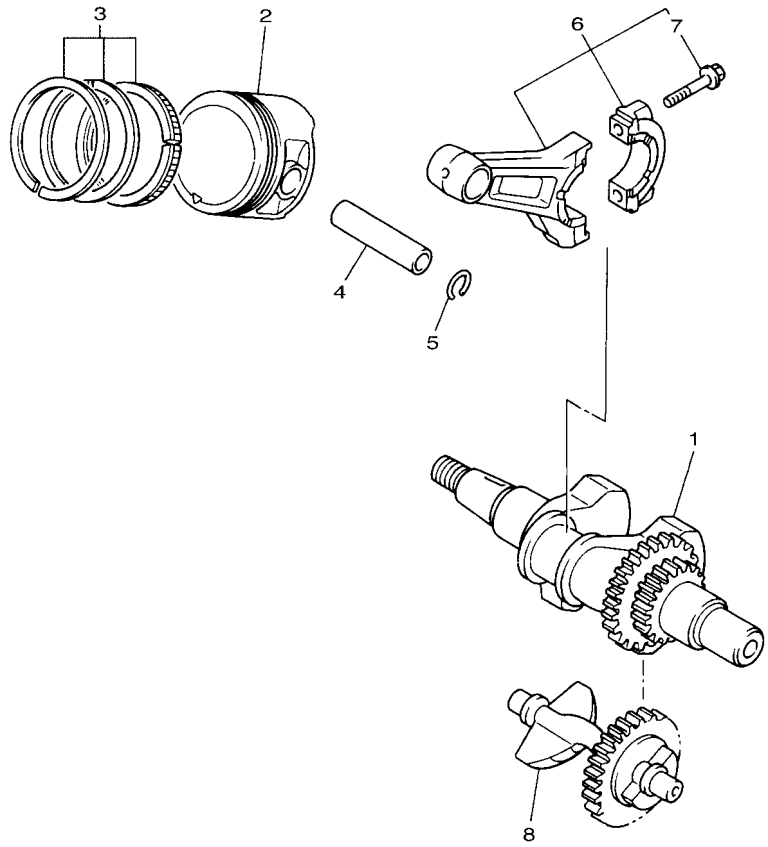

JN7010-6021

FIG. 2 CRANKSHAFT & PISTON

REF. NO.	PART NO.	DESCRIPTION	JB64					REMARKS
1	JN6–11400–00	CRANKSHAFT ASSY	1					
2	JR7–11631–00–A0	PISTON (STD)	1					
	JR7–11635–00	PISTON (0.25MM O/S)	1					AP
	JR7–11636–00	PISTON (0.50MM O/S)	1					AP
3	JR7–11610–00	PISTON RING SET (STD)	1					
	JR7–11610–10	PISTON RING SET (0.25MM O/S)	1					AP
	JR7–11610–20	PISTON RING SET (0.50MM O/S)	1					AP
4	583–11633–00	PIN, PISTON	1					
5	93450–21053	CIRCLIP	2					
6	JN6–11650–10	CONNECTING ROD ASSY	1					
7	JN6–11654–10	.BOLT, CONNECTING ROD	2					
8	JN6–11454–10	WEIGHT 1	1					

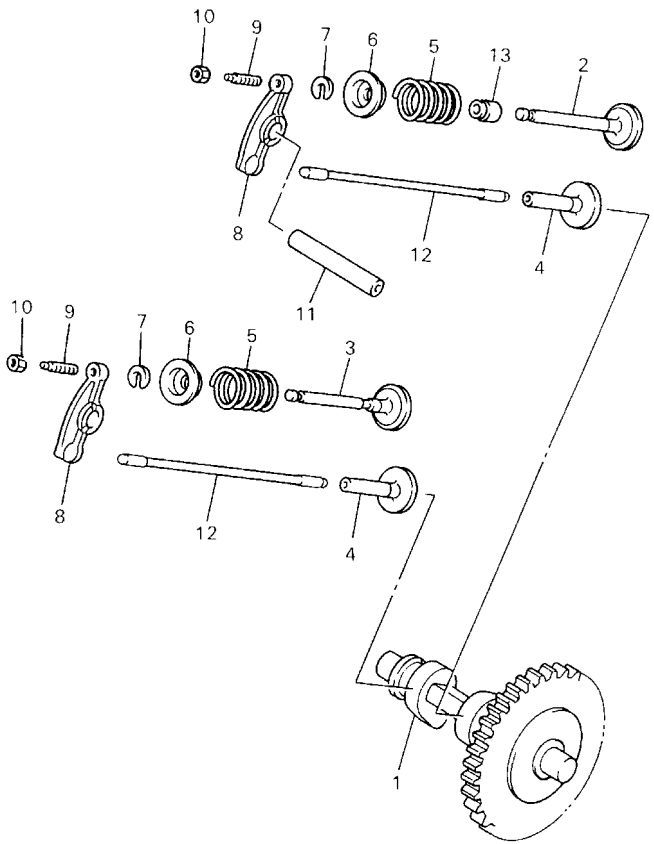

JT01010-0030

FIG. 3 CAMSHAFT & VALVE

REF. NO.	PART NO.	DESCRIPTION	JB64					REMARKS
1	JR7–12180–10	CAMSHAFT ASSY 2	1					
2	JN6–12111–10	VALVE, INTAKE	1					
3	7RH–12121–10	VALVE, EXHAUST	1					
4	JN6–12153–10	LIFTER, VALVE	2					
5	90501–264A9	SPRING, COMPRESSION	2					
6	J38–12117–01	RETAINER, VALVE SPRING	2					
7	J38–12118–00	LOCK, VALVE SPRING RETAINER	2					
8	JN6–12151–00	ARM, VALVE ROCKER	2					
9	22F–12159–10	SCREW, VALVE ADJUSTING	2					
10	90170–05302	NUT	2					
11	J38–12156–20	SHAFT, ROCKER 2	1					
12	JR7–12154–10	ROD, VALVE PUSH	2					
13	4G0–12119–00	SEAL, VALVE STEM	1					

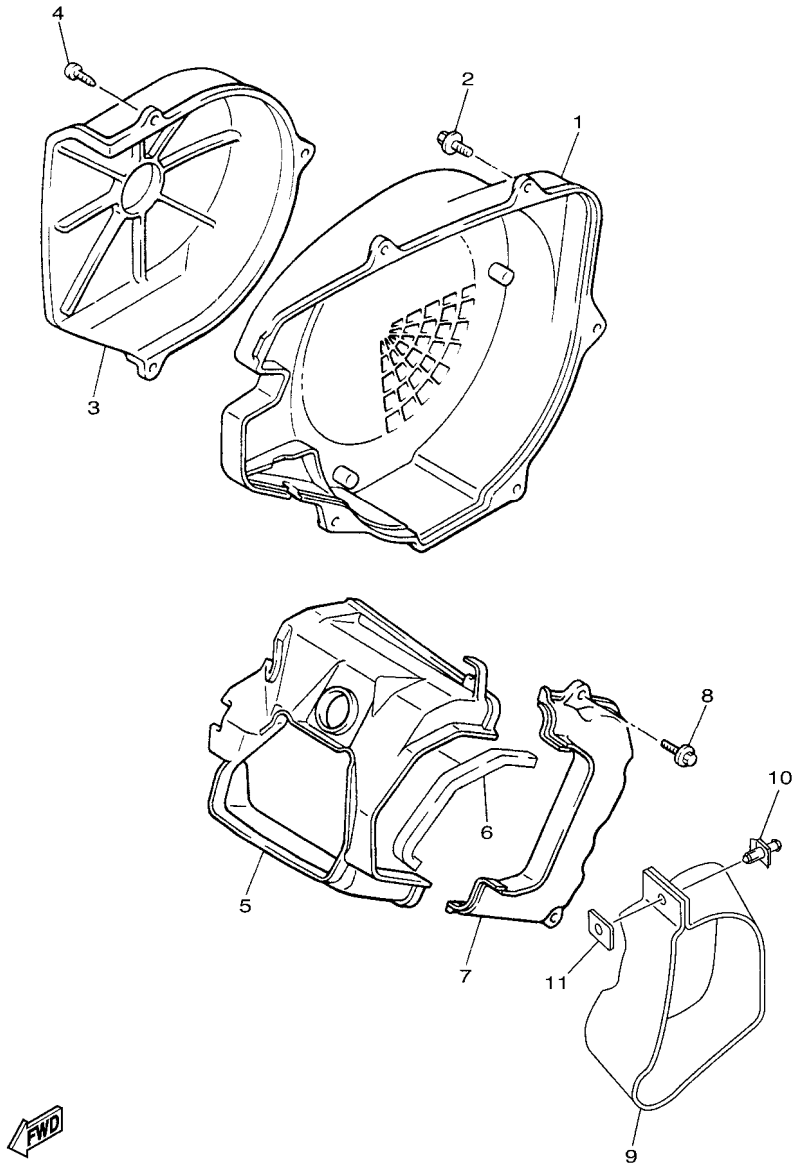

FIG. 4 AIR SHROUD & FAN

REF. NO.	PART NO.	DESCRIPTION	JB64					REMARKS
1	JN6–12621–02	CASE, FAN	1					
2	95D02–06020	BOLT, FLANGE DEEP RECESS	4					
3	JN6–12616–00	COVER, FAN CASE	1					
4	97702–60420	SCREW, TAPPING	3					
5	JN6–12651–01	AIR SHROUD, CYLINDER 1	1					
6	JR7–12658–00	DAMPER, AIR SHROUD 1	1					
7	JN6–12652–00	AIR SHROUD, CYLINDER 2	1					
8	95D02–06020	BOLT, FLANGE DEEP RECESS	2					
9	JX4–12691–00	DUCT 1	1					
10	90269–10001	RIVET	1					
11	JR7–12634–00	PLATE 2	1					

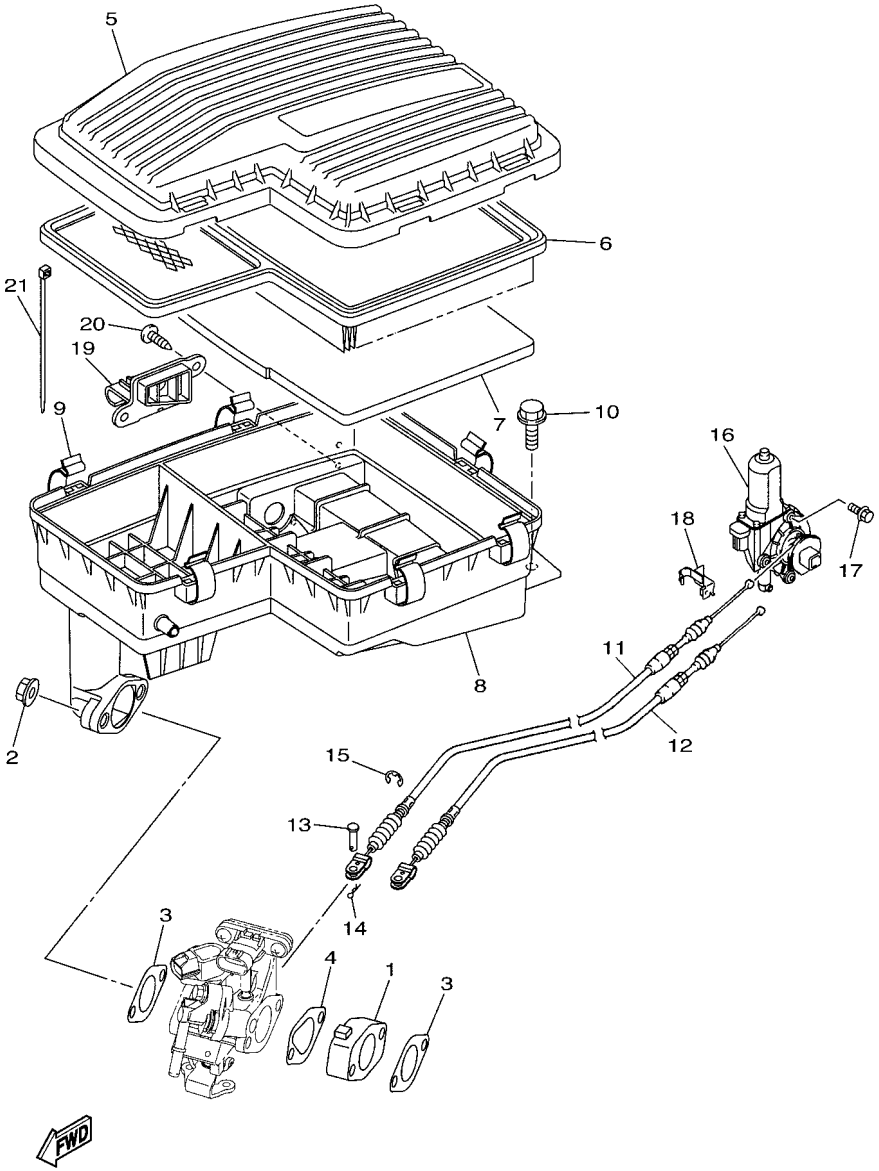

JB62010-S050

FIG. 5 INTAKE 1

REF. NO.	PART NO.	DESCRIPTION	JB64					REMARKS
1	JC0–13595–00	JOINT	1					
2	95702–08500	NUT, FLANGE	2					
3	JN6–13567–00	GASKET	2					
4	JC0–13567–00	GASKET	1					
5	J0B–E4412–00	CAP, CLEANER CASE 1	1					
6	J0B–E4451–01	ELEMENT, AIR CLEANER	1					
7	JU0–E445E–00	FILTER 1	1					
8	J0B–E4411–01	CASE, AIR CLEANER 1	1					
9	3B4–14424–00	CLIP, CAP FITTING	7					
10	95D02–06016	BOLT, FLANGE DEEP RECESS	2					
11	JB2–26312–00	CABLE, THROTTLE 2	1					
12	JB2–26313–00	CABLE, THROTTLE 3	1					
13	91702–05010	PIN, CLEVIS	2					
14	90468–10049	CLIP	2					
15	99001–07600	CIRCLIP	2					
16	JY2–81802–00	MOTOR UNIT ASSY.	1					
17	90153–05064	SCREW, HEXAGON	3					
18	JY2–2384L–01	COVER, DUST	1					
19	JB2–14453–00	JOINT, AIR CLEANER 1	1					
20	97702–50016	SCREW, TAPPING	2					
21	90464–23003	CLAMP	1					

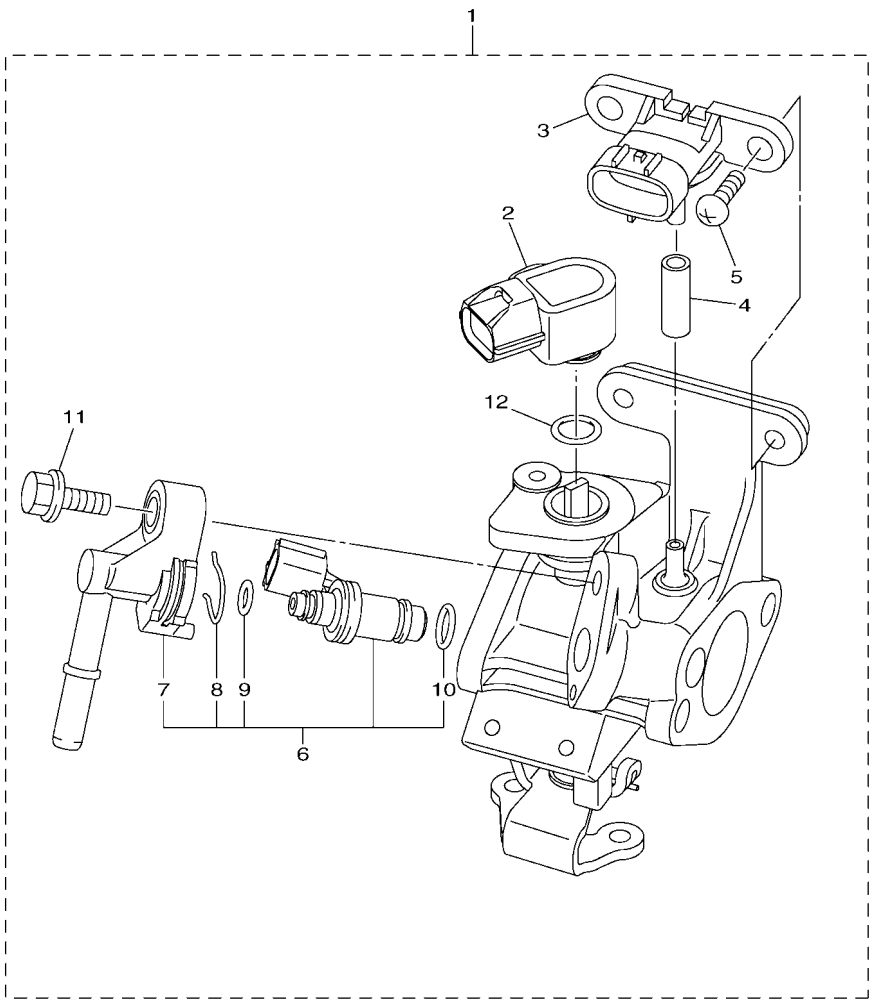

JB62010-S062

FIG. 6 INTAKE 2

REF. NO.	PART NO.	DESCRIPTION	JB64					REMARKS
1	JB2–13750–00	THROTTLE BODY ASSY	1					
2	JB2–85885–00	.THROTTLE SENSOR ASSY	1					
3	1C7–82380–00	.SENSOR, PRESSURE	1					
4	JC0–13542–00	.HOSE, VACUUM SENSING 1	1					
5	98502–06014	.SCREW, PAN HEAD	2					
6	J0B–13770–00	.INJECTOR ASSY	1					
7	52S–13938–00	..PIPE	1					
8	52B–14137–00	..CLIP	1					
9	52B–14147–00	..O-RING	1					
10	5CA–14147–00	..O-RING	1					
11	95812–06025	.BOLT, FLANGE	1					
12	JB2–13769–00	.O-RING	1					

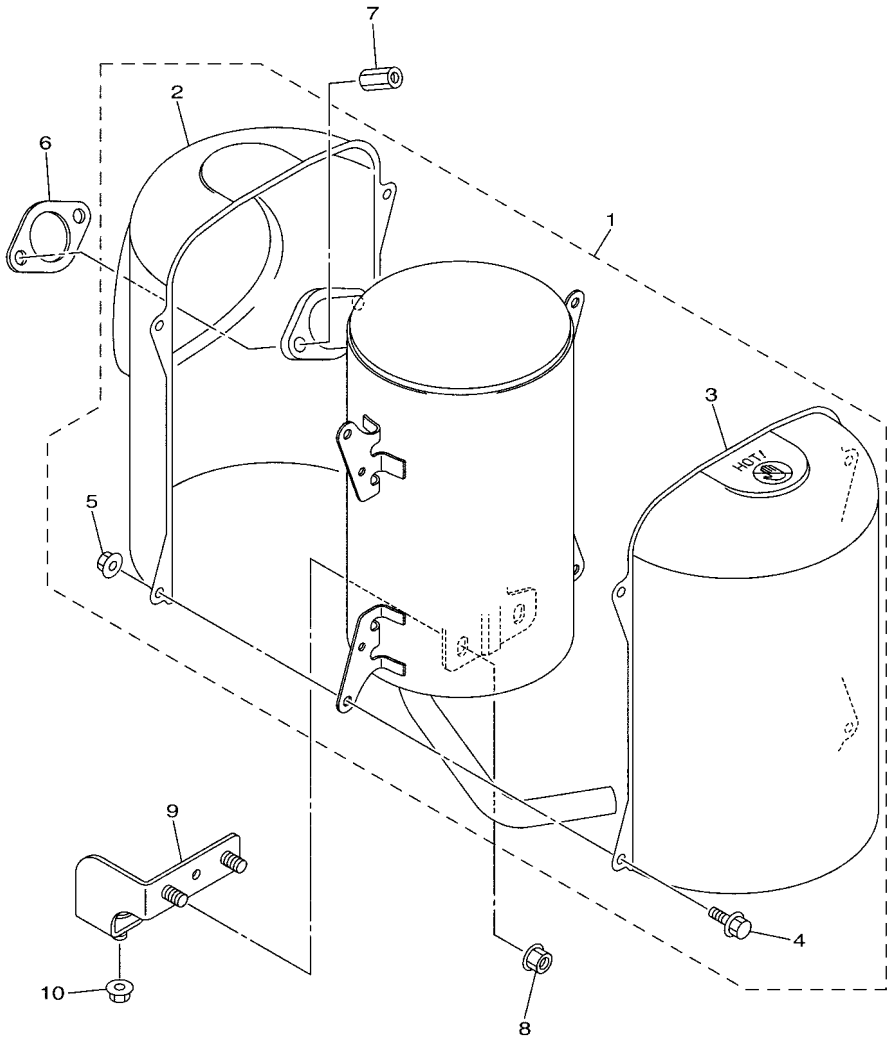

JB62010-S070

FIG. 7 EXHAUST

REF. NO.	PART NO.	DESCRIPTION	JB64					REMARKS
1	JB2–14710–20	MUFFLER ASSY 1	1					
2	JY2–14718–00	.PROTECTOR, MUFFLER 1	1					
3	JY2–14728–00	.PROTECTOR, MUFFLER 2	1					
4	95822–06012	.BOLT, FLANGE	4					
5	95602–06200	.NUT, SELF-LOCKING	4					
6	7KY–14613–01	GASKET, EXHAUST 1	1					
7	90170–08209	NUT	2					
8	95702–08500	NUT, FLANGE	2					
9	JB2–14771–00	STAY, MUFFLER 1	1					
10	95702–08500	NUT, FLANGE	1					

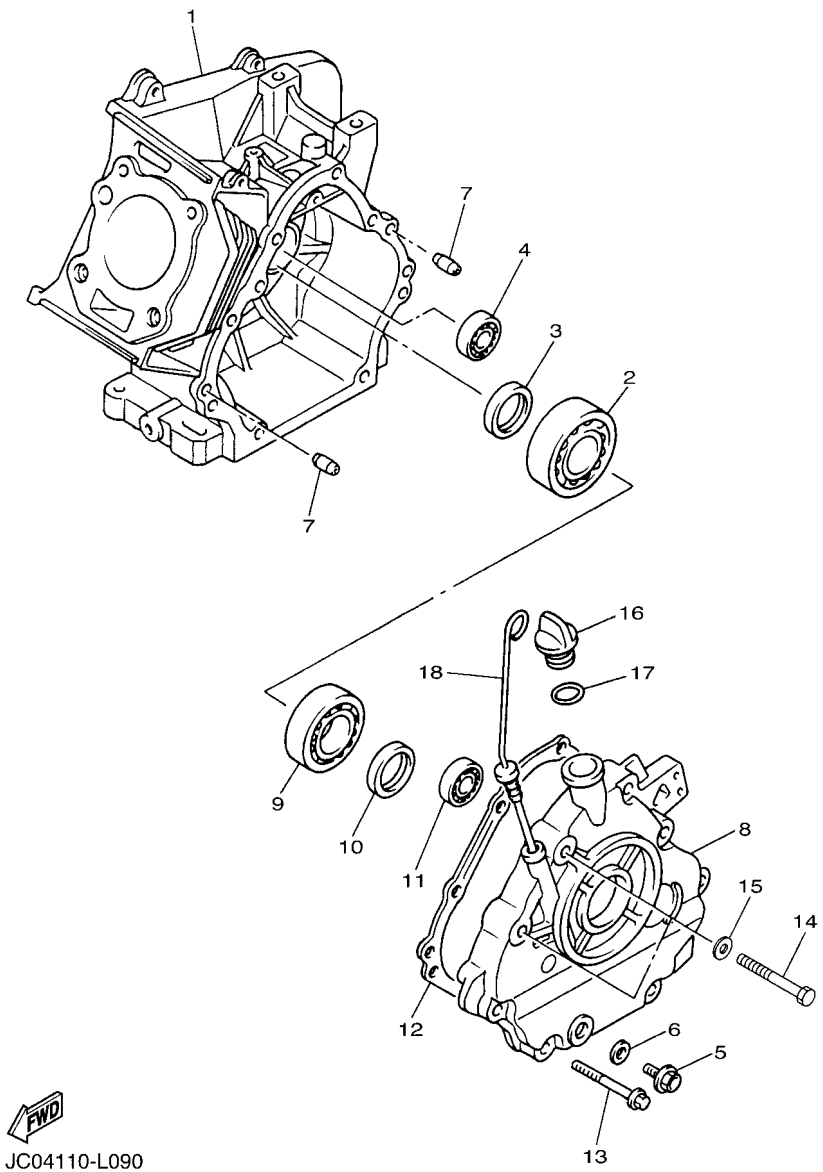

FIG. 8 CRANKCASE

REF. NO.	PART NO.	DESCRIPTION	JB64					REMARKS
1	JC0–15111–01	CRANKCASE 1	1					
2	93306–30709	BEARING	1					
3	93102–35014	OIL SEAL	1					
4	93306–20201	BEARING	1					
5	90340–12097	PLUG, STRAIGHT SCREW	1					
6	812–11198–00	GASKET	1					
7	99530–08016	PIN, DOWEL	2					
8	JN6–15411–01	COVER, CRANKCASE 1	1					
9	93306–20714	BEARING	1					
10	93102–35014	OIL SEAL	1					
11	93306–20201	BEARING	1					
12	JY2–15451–00	GASKET, CRANKCASE COVER 1	1					
13	95812–08045	BOLT, FLANGE	6					
14	97012–10050	BOLT	2					
15	90201–10057	WASHER, PLATE	2					
16	796–15363–01	PLUG, OIL	1					
17	93210–22344	O-RING	1					
18	J38–15361–00	GAUGE, LEVEL	1					

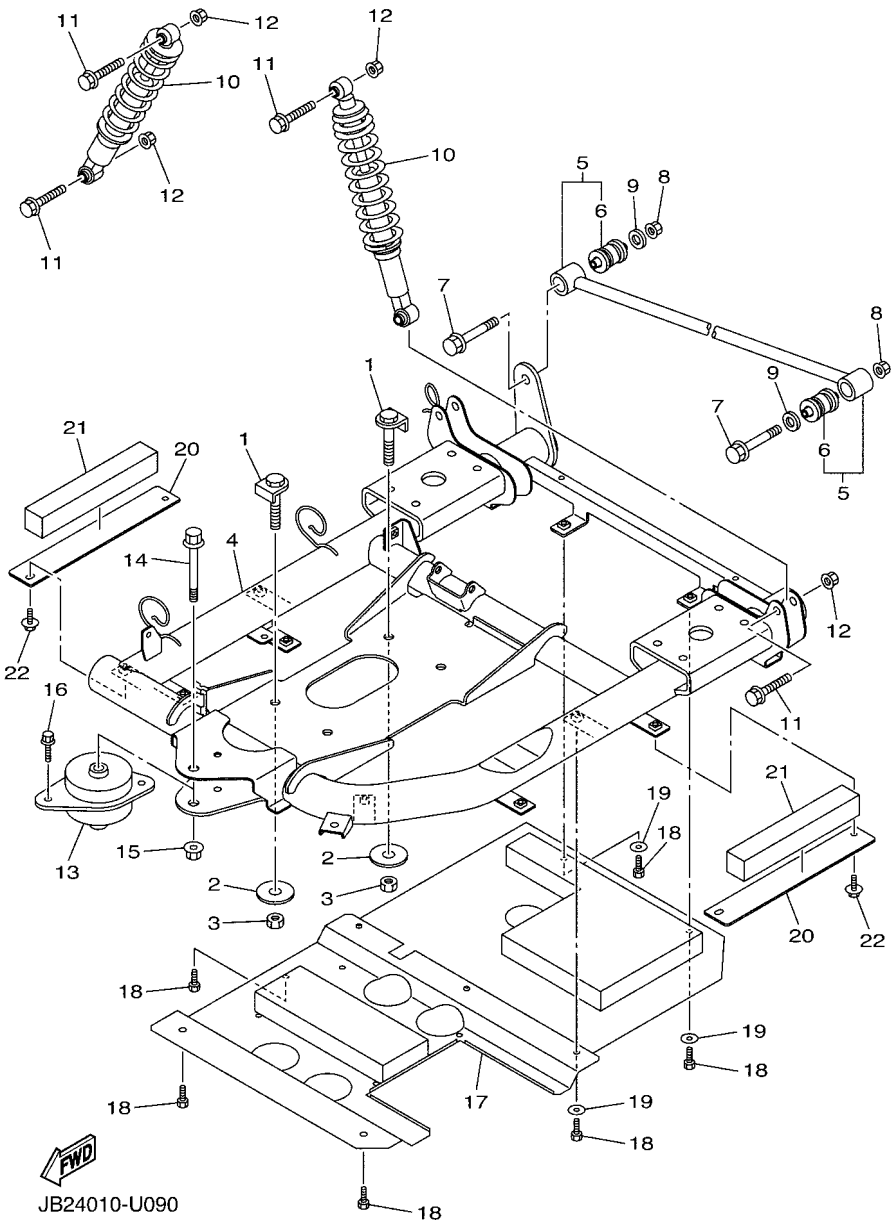

FIG. 9 REAR ARM & SUSPENSION

REF. NO.	PART NO.	DESCRIPTION	JB64					REMARKS
1	JT0–21481–00	BOLT, ENGINE MOUNTING 1	4					
2	90201–107G8	WASHER, PLATE	4					
3	90185–10060	NUT, SELF-LOCKING	4					
4	JB2–22110–10	REAR ARM COMP.	1					
5	JB2–22172–00	ARM, REAR 2	1					
6	JX4–22124–00	.BUSH 2	2					
7	95812–12065	BOLT, FLANGE	2					
8	90185–12009	NUT, SELF-LOCKING	2					
9	90201–121J0	WASHER, PLATE	2					
10	JY4–22210–00	SHOCK ABSORBER ASSY, REAR	2					
11	95812–10045	BOLT, FLANGE	4					
12	95602–10200	NUT, S/L FLANGE	4					
13	JX4–22123–00	BUSH 1	1					
14	90105–12031	BOLT, FLANGE	1					
15	95602–12200	NUT, SELF-LOCKING	1					
16	95812–10016	BOLT, FLANGE	2					
17	JB2–22130–20	ARM SUB COMP. 1	1					
18	95D32–06014	BOLT, FLANGE DEEP RECESS	6					
19	90201–06074	WASHER, PLATE	3					
20	JB2–22348–00	PLATE 2	2					
21	JB2–78252–00	PAD, SILENCER 2	2					
22	95817–06014	BOLT, FLANGE	4					

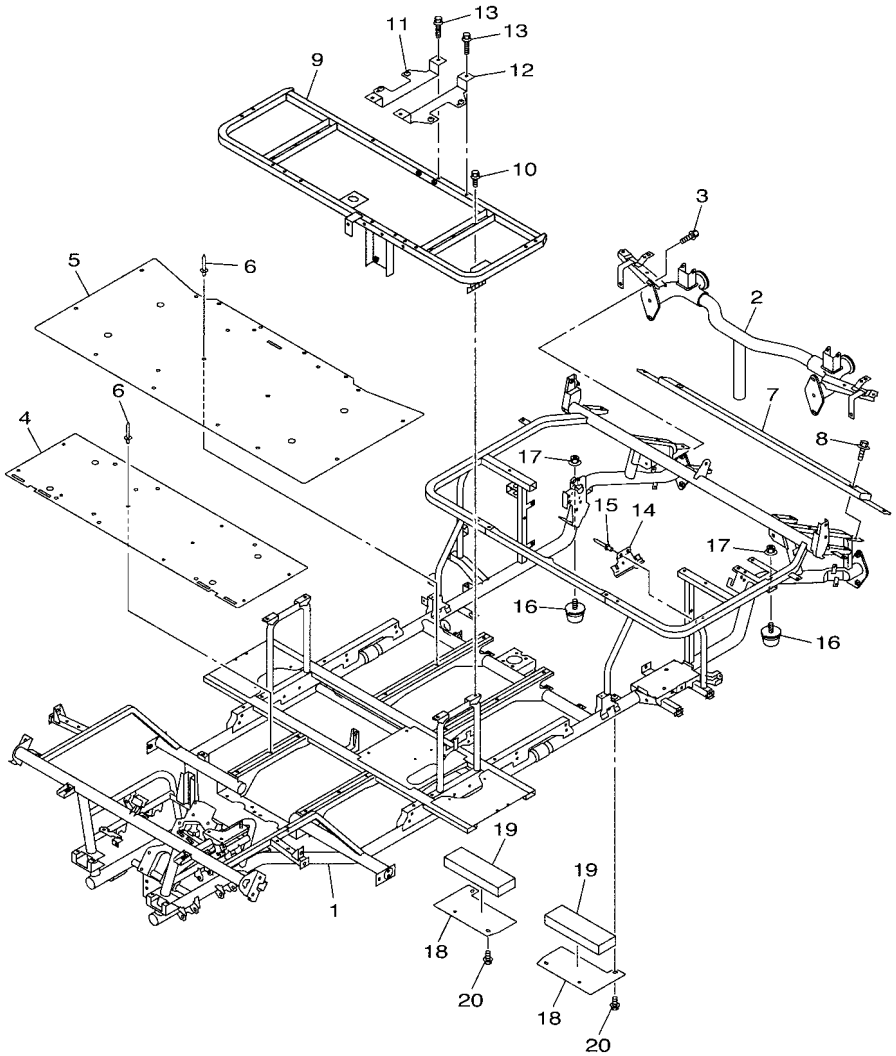

JB63417-T100

FIG. 10 FRAME

REF. NO.	PART NO.	DESCRIPTION	JB64					REMARKS
1	JB6–22501–29	FRAME COMP.	1					
2	JY6–22504–00	RR. SUB-FRAME COMP.	1					
3	95822–10025	BOLT, FLANGE	4					
4	JB2–22571–00	PANEL 1	1					
5	JB2–22572–11	PANEL 2	1					
6	90267–48101	RIVET, BLIND	20					
7	JX4–22597–00	REINFORCEMENT 2	1					
8	95812–08020	BOLT, FLANGE	2					
9	JY2–78460–00	SEAT FRAME COMP.	1					
10	95D02–06012	BOLT, FLANGE DEEP RECESS	4					
11	JX6–2259N–00	BRACKET, CONTROL 2	1					
12	JX6–2259M–00	BRACKET, CONTROL 1	1					
13	95D02–06030	BOLT, FLANGE DEEP RECESS	4					
14	JX4–22562–01	STAY, FUSE	1					
15	90267–48101	RIVET, BLIND	2					
16	5GJ–22426–00	BUMP, STOP	2					
17	95602–06200	NUT, SELF-LOCKING	2					
18	JB2–22594–00	PLATE 3	2					
19	JB2–78253–00	PAD, SILENCER 3	2					
20	95817–06014	BOLT, FLANGE	6					

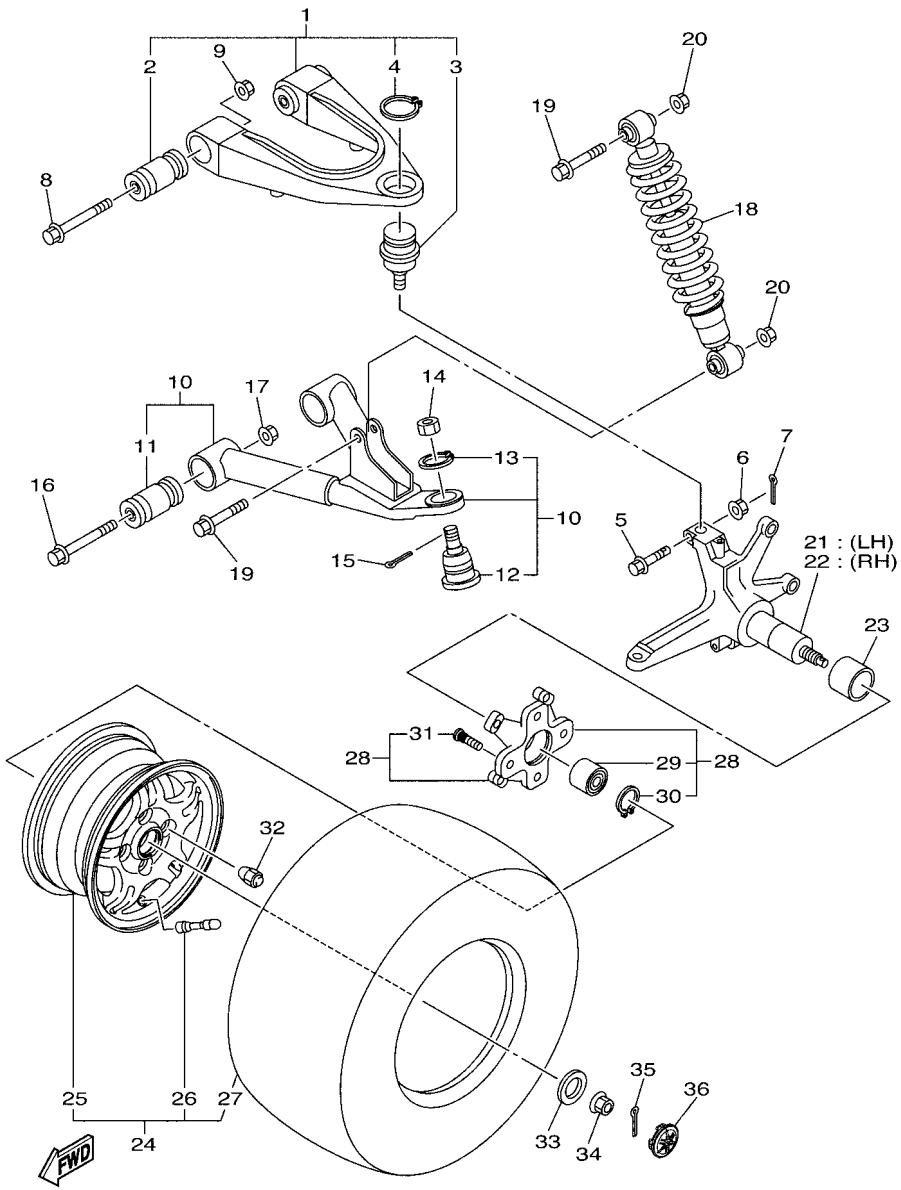

FIG. 11 FRONT SUSPENSION & WHEEL

REF. NO.	PART NO.	DESCRIPTION	JB64					REMARKS
1	JB2–23540–00	FRONT UPPER ARM COMP. (LEFT)	2					
2	2HR–23526–00	.BUSH	2					
3	JX4–23549–01	.BALL JOINT 1	1					
4	99009–30400	.CIRCLIP	1					
5	90105–10728	BOLT, FLANGE	2					
6	95702–10500	NUT, FLANGE	2					
7	91402–25020	PIN, COTTER	2					
8	90105–10116	BOLT, FLANGE	4					
9	95607–10200	NUT, U FLANGE	4					
10	JY8–23570–01	FRONT LOWER ARM COMP.	2					
11	2HR–23526–00	.BUSH	2					
12	JX4–23579–01	.BALL JOINT 2	1					
13	99009–32400	.CIRCLIP	1					
14	90171–12001	NUT, CASTLE	2					
15	91402–25020	PIN, COTTER	2					
16	90105–10221	BOLT, FLANGE	4					
17	95602–10200	NUT, S/L FLANGE	4					
18	JY4–23350–00	SHOCK ABSORBER ASSY	2					
19	95822–10045	BOLT, FLANGE	4					
20	95602–10200	NUT, S/L FLANGE	4					
21	JX2–23510–00	KNUCKLE, STEERING COMP. (LEFT)	1					
22	JX2–23520–00	STEERING KNUCKLE COMP. (RIGHT)	1					
23	90387–30006	COLLAR	2					
24	JB2–25100–00	WHEEL ASSY (190/50-12-4PR)	2					
25	JY8–25180–00	.WHEEL COMP. (ALUMINIUM)	1					
26	93900–00022	.VALVE, RIM (TR413)	1					TAIHEIYO
27	JB2–2510S–00	.TIRE (190/50-12-4PR KENDA)	1					

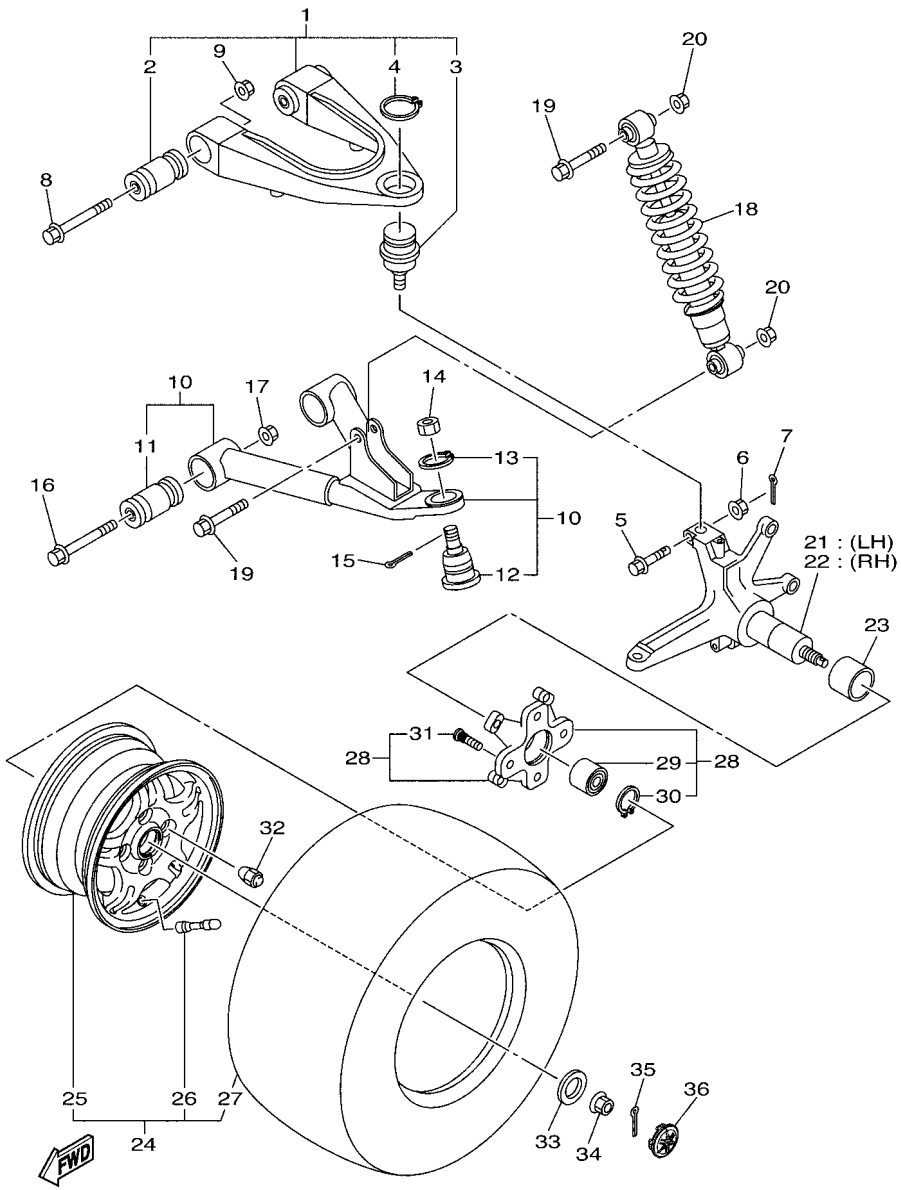

FIG. 11 FRONT SUSPENSION & WHEEL

REF. NO.	PART NO.	DESCRIPTION	JB64					REMARKS
28	JY2–25110–00	HUB ASSY, FRONT	2					
29	93305–00602	.BEARING	1					
30	99009–55500	.CIRCLIP	1					
31	90114–10019	.BOLT, SERRATION	4					
32	90179–10031	NUT	8					
33	90201–163M0	WASHER, PLATE	2					
34	95604–16200	NUT, U FLANGE	2					
35	91402–25020	PIN, COTTER	2					
36	JY8–2512A–01	CAP, WHEEL	2					

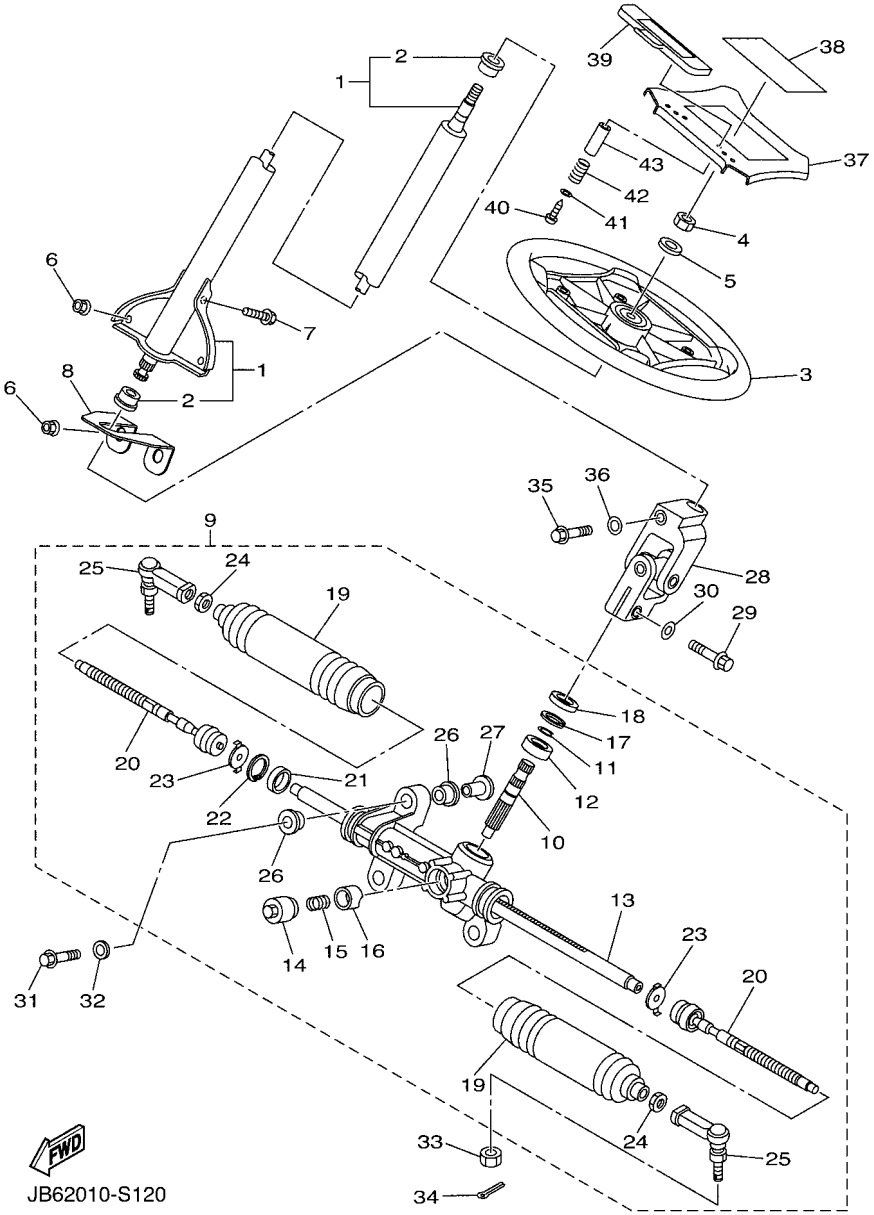

FIG. 12 STEERING

REF. NO.	PART NO.	DESCRIPTION	JB64					REMARKS
1	JY6–23810–00	STEERING COLUMN ASSY	1					
2	J50–23857–00	.HOLDER	2					
3	JN5–23838–00	WHEEL, STEERING	1					
4	95602–12100	NUT, U	1					
5	90201–12190	WASHER, PLATE	1					
6	95702–08500	NUT, FLANGE	4					
7	95812–08020	BOLT, FLANGE	1					
8	JB6–2386N–01	STOPPER	1					
9	JX4–23400–01	STEERING ASSY	1					
10	JX4–2387A–01	.GEAR,PINION	1					
11	JX4–2384N–00	.CLIP, RING	1					
12	JX4–23812–00	.BEARING, STEERING	1					
13	JX4–2387E–00	.GEAR, RACK	1					
14	JR7–2387G–00	.COVER, ADJUST	1					
15	JR7–2387K–00	.SPRING, PRESSURE	1					
16	JR7–2387F–00	.PAD, PRESSURE	1					
17	JR7–2387J–00	.RING, STOPPER	1					
18	JR7–23844–00	.SEAL	1					
19	JR7–23848–00	.BOOTS B	2					
20	JX4–23837–00	.ROD, TIE 2	2					
21	JR7–2467K–00	.BUSH CAP	1					
22	JR7–23866–00	.RING, SNAP	1					
23	JR7–23894–00	.WASHER, LOCK 1	2					
24	JR7–23833–00	.NUT 1	2					
25	JX4–23841–00	.JOINT, UNIVERSAL 1	2					
26	JX4–23445–00	.BUSH	6					
27	JX4–23417–00	.COLLAR	3					

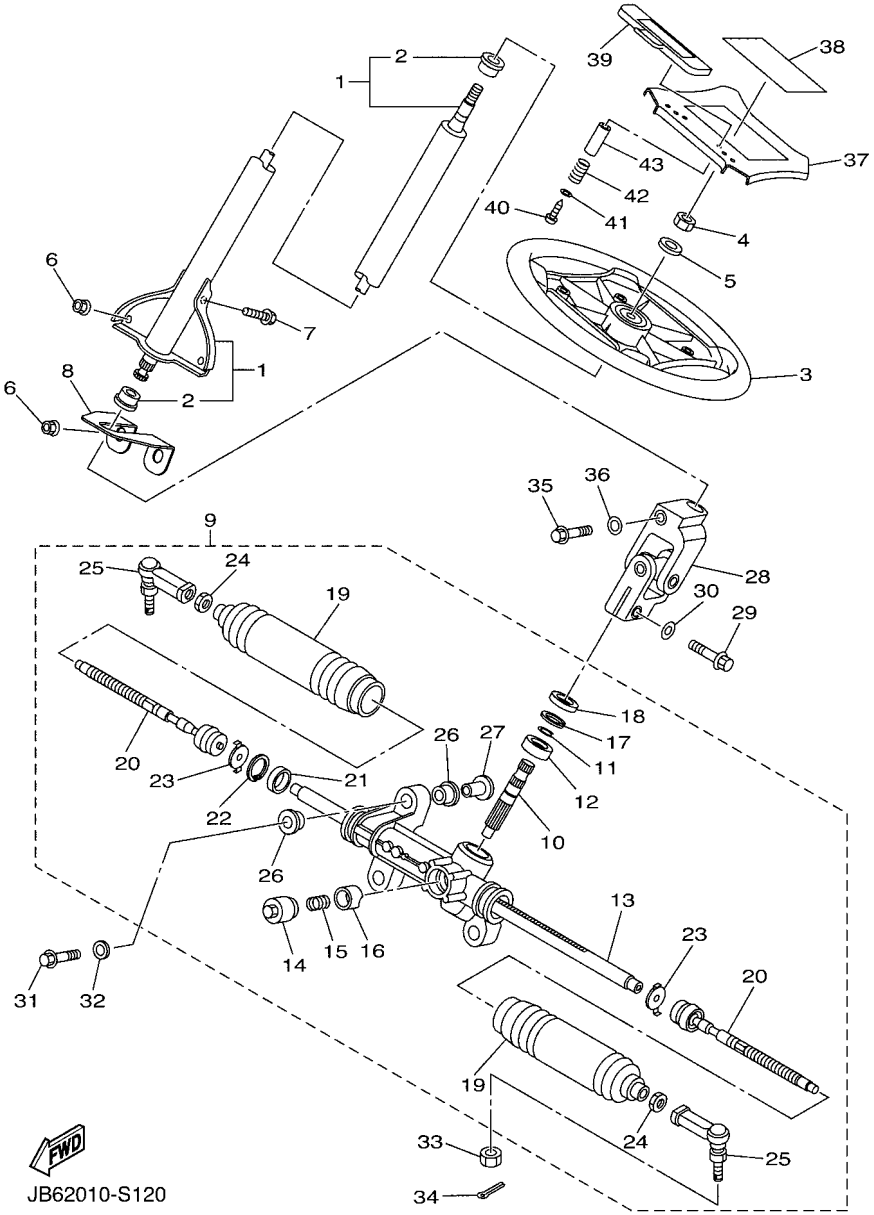

FIG. 12 STEERING

REF. NO.	PART NO.	DESCRIPTION	JB64					REMARKS
28	JR9–23823–01	JOINT 2	1					
29	JX4–23876–00	BOLT	1					
30	JX4–23427–00	WASHER	1					
31	90105–10283	BOLT, FLANGE	3					
32	90201–105A2	WASHER, PLATE	3					
33	90171–12001	NUT, CASTLE	2					
34	91402–25020	PIN, COTTER	2					
35	JX4–23876–00	BOLT	1					
36	JX4–23427–00	WASHER	1					
37	JN5–78357–10	HOLDER 1	1					
38	JY6–77762–10	LABEL, WARNING 2	1					
39	JX4–78358–00	HOLDER 2	1					
40	97707–40525	SCREW, TAPPING	2					
41	90201–044H9	WASHER, PLATE	2					
42	90502–10013	SPRING, CONICAL	2					
43	90387–046N7	COLLAR	2					

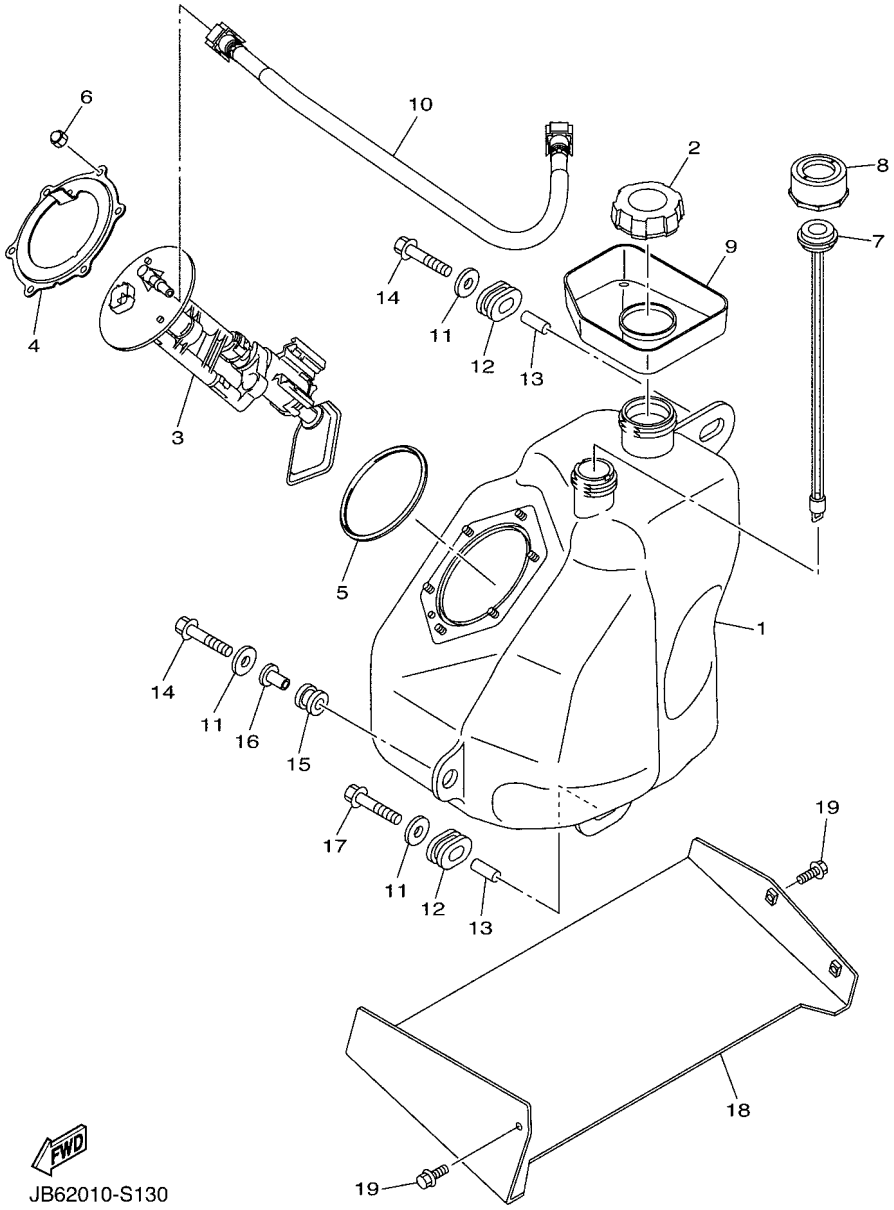

FIG. 13 FUEL TANK

REF. NO.	PART NO.	DESCRIPTION	JB64					REMARKS
1	JB2–24110–01	FUEL TANK COMP.	1					
2	JH2–24610–10	CAP ASSY	1					
3	J0B–13907–01	FUEL PUMP COMP.	1					
4	18P–24491–00	BRACKET, FUEL PUMP	1					
5	1S3–24486–00	O-RING	1					
6	95302–06800	NUT, CROWN	6					
7	JX4–24260–03	FUEL METER ASSY	1					
8	4J2–24261–00	HOUSING, FUEL METER	1					
9	JB2–24217–00	COVER	1					
10	JB2–13971–00	PIPE, FUEL 1	1					
11	90201–06090	WASHER, PLATE	3					
12	90480–01400	GROMMET	2					
13	90387–07598	COLLAR	2					
14	90119–06073	BOLT, WITH WASHER	2					
15	90480–18290	GROMMET	1					
16	90387–066J1	COLLAR	1					
17	90119–06073	BOLT, WITH WASHER	1					
18	JX4–24141–00	PROTECTOR, FUEL TANK	1					
19	95D02–06010	BOLT, FLANGE DEEP RECESS	3					

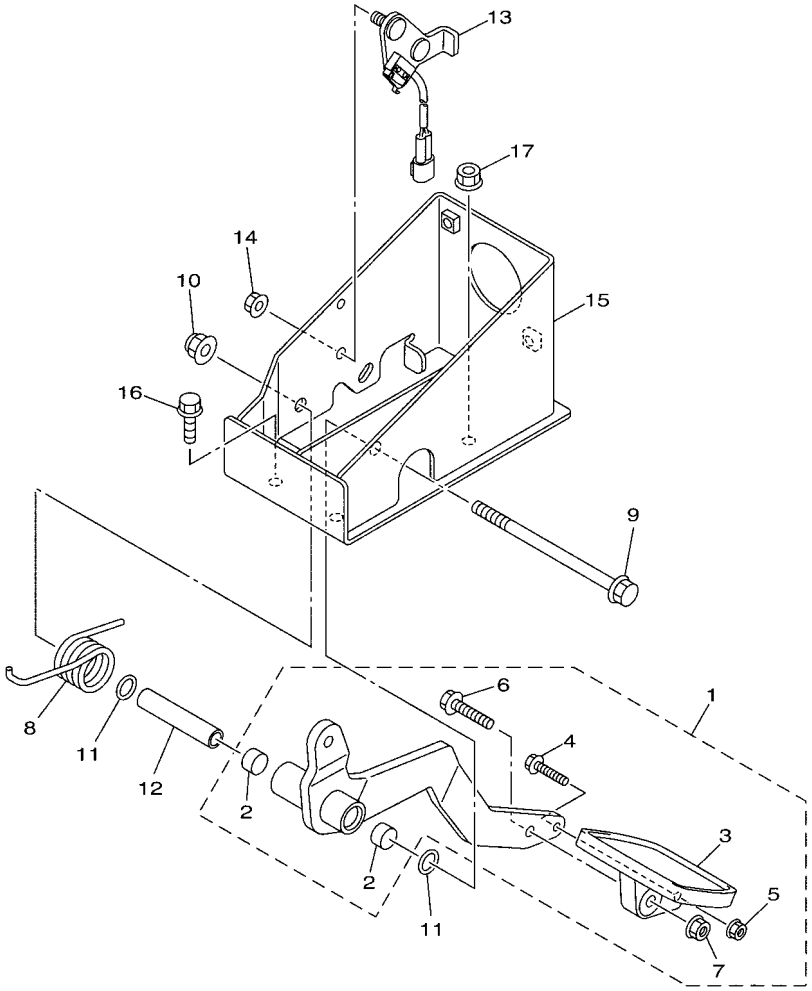

JB21010-P170

FIG. 14 BRAKE

REF. NO.	PART NO.	DESCRIPTION	JB64					REMARKS
1	JB2–27200–00	PEDAL, BRAKE	1					
2	90384–14080	.BUSH, BIMETAL FORMED	2					
3	JB2–27211–00	.PEDAL, BRAKE	1					
4	95822–06030	.BOLT, FLANGE	1					
5	95702–06500	.NUT, FLANGE	1					
6	95802–08035	.BOLT, FLANGE	1					
7	95702–08500	.NUT, FLANGE	1					
8	90508–40015	SPRING, TORSION	1					
9	95812–10090	BOLT, FLANGE	1					
10	90185–10019	NUT, SELF-LOCKING	1					
11	93210–132A8	O-RING	2					
12	90387–10109	COLLAR	1					
13	JB2–82530–00	STOP SWITCH ASSY	1					
14	95702–08500	NUT, FLANGE	2					
15	JB2–27263–00	BRACKET 1	1					
16	95822–08014	BOLT, FLANGE	2					
17	95702–08500	NUT, FLANGE	1					

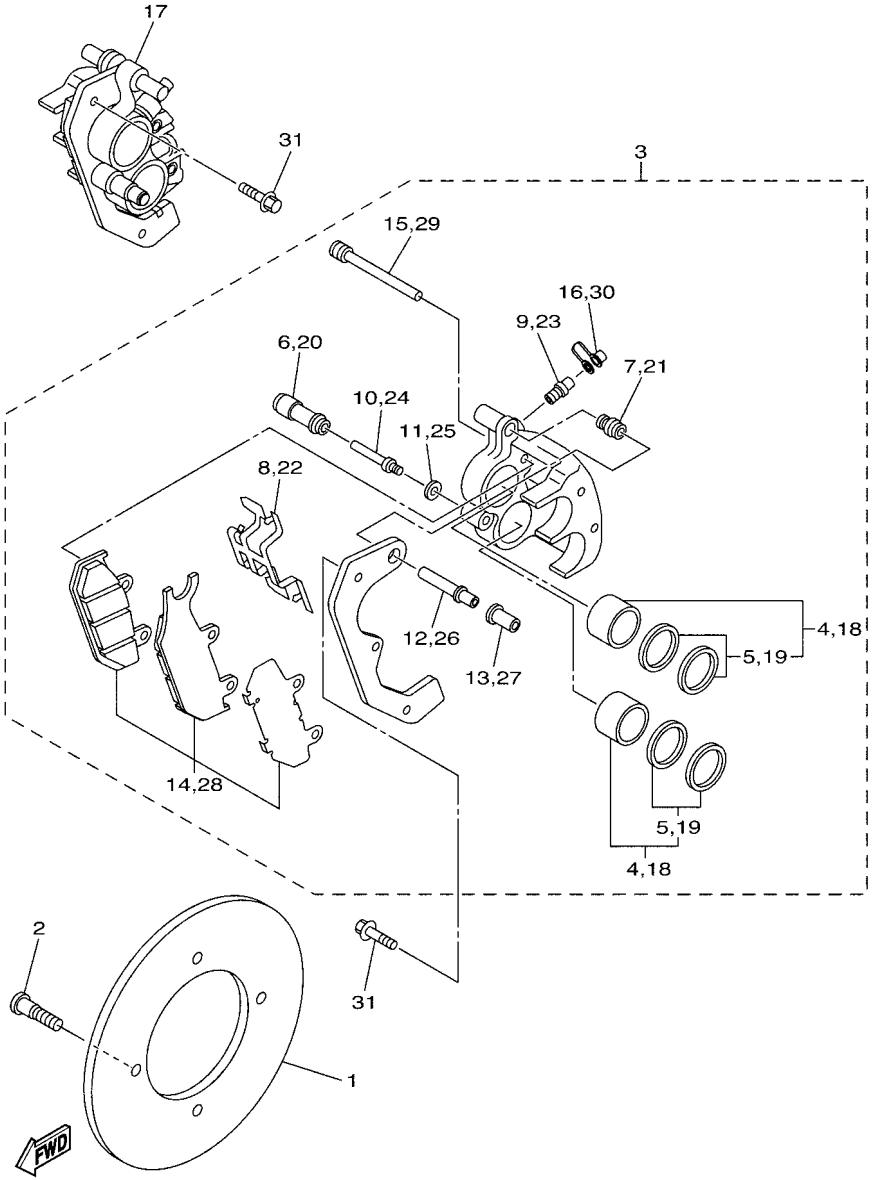

JB03414-T080

FIG. 15 BRAKE 2

REF. NO.	PART NO.	DESCRIPTION	JB64					REMARKS
1	JX2–2582T–00	DISC, BRAKE	2					
2	90109–08221	BOLT	8					
3	JX2–2580T–02	CALIPER ASSY (LEFT)	1					
4	3TB–W0057–00	.PISTON ASSY, CALIPER	2					
5	3GD–W0047–00	..CALIPER SEAL KIT	1					
6	1UY–25937–51	.BOOT 2	1					
7	3JD–25917–00	.BOOT, CALIPER	1					
8	JX2–25919–00	.SUPPORT, PAD	1					
9	1UY–25824–51	.SCREW, BLEED	1					
10	1UY–25926–51	.BOLT	1					
11	1UY–25938–51	.WASHER, SPRING	1					
12	3JD–25926–00	.BOLT	1					
13	JX2–25961–00	.NUT	1					
14	JX2–W0045–11	.BRAKE PAD KIT	1					
15	3TB–25933–00	.WASHER, PAD PIN	2					
16	1UY–25825–51	.CAP	1					
17	JX2–2580U–02	CALIPER ASSY (RIGHT)	1					
18	3TB–W0057–00	.PISTON ASSY, CALIPER	2					
19	3GD–W0047–00	..CALIPER SEAL KIT	1					
20	1UY–25937–51	.BOOT 2	1					
21	3JD–25917–00	.BOOT, CALIPER	1					
22	JX2–25919–00	.SUPPORT, PAD	1					
23	1UY–25824–51	.SCREW, BLEED	1					
24	1UY–25926–51	.BOLT	1					
25	1UY–25938–51	.WASHER, SPRING	1					
26	3JD–25926–00	.BOLT	1					
27	JX2–25961–00	.NUT	1					

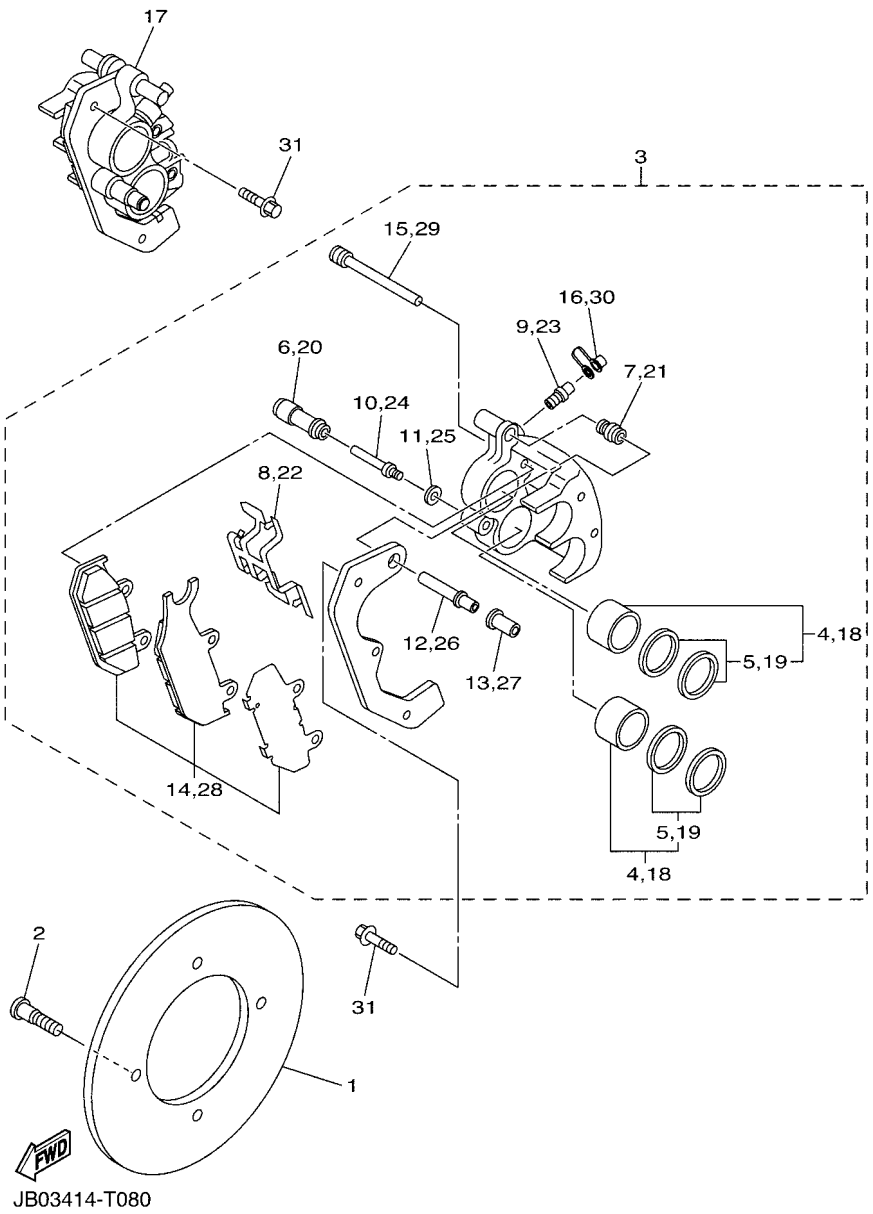

FIG. 15 BRAKE 2

REF. NO.	PART NO.	DESCRIPTION	JB64					REMARKS
28	JX2–W0045–21	.BRAKE PAD KIT	1					
29	3TB–25933–00	.WASHER, PAD PIN	2					
30	1UY–25825–51	.CAP	1					
31	90105–102A9	BOLT, FLANGE	4					

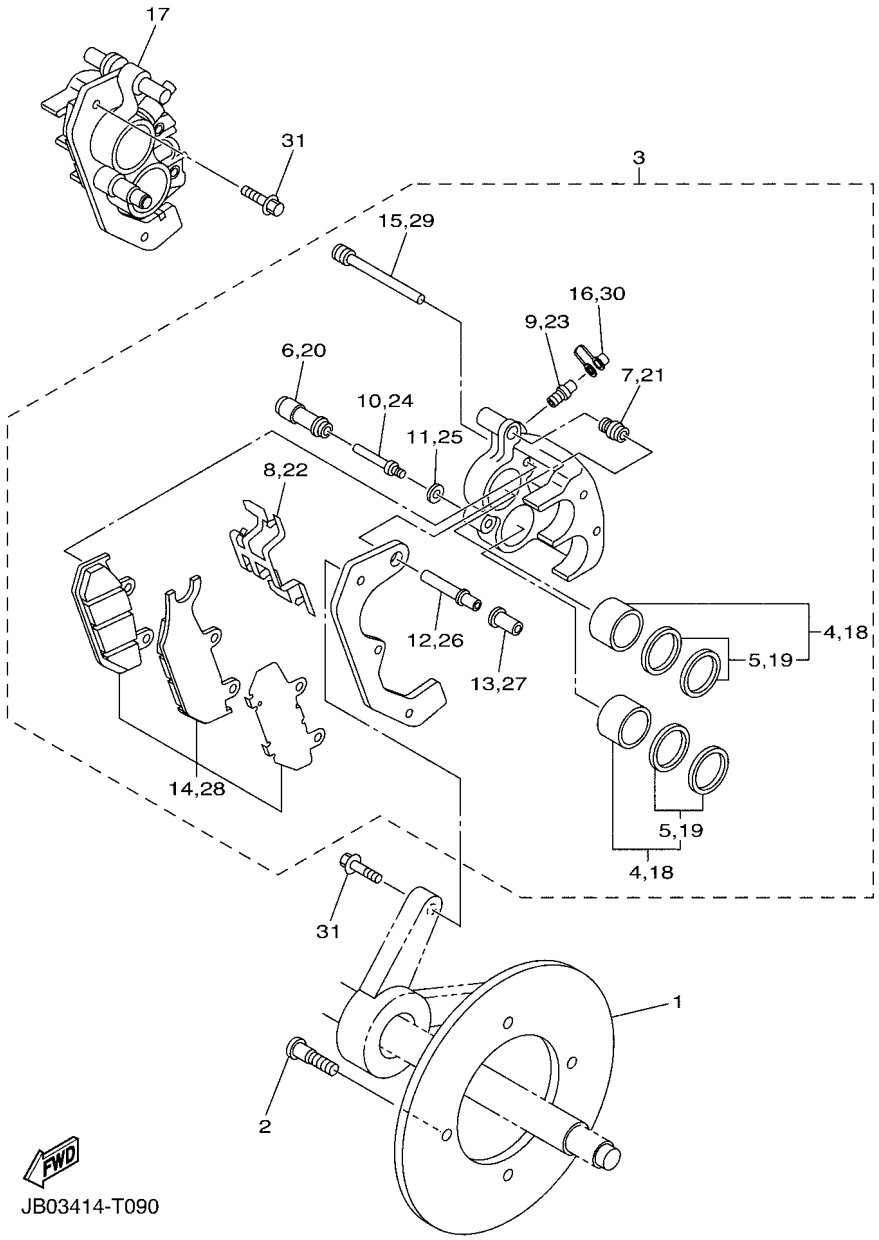

FIG. 16 BRAKE 3

REF. NO.	PART NO.	DESCRIPTION	JB64					REMARKS
1	JX2–2582T–00	DISC, BRAKE	2					
2	90109–08221	BOLT	8					
3	JX2–2580T–02	CALIPER ASSY (LEFT)	1					
4	3TB–W0057–00	.PISTON ASSY, CALIPER	2					
5	3GD–W0047–00	..CALIPER SEAL KIT	1					
6	1UY–25937–51	.BOOT 2	1					
7	3JD–25917–00	.BOOT, CALIPER	1					
8	JX2–25919–00	.SUPPORT, PAD	1					
9	1UY–25824–51	.SCREW, BLEED	1					
10	1UY–25926–51	.BOLT	1					
11	1UY–25938–51	.WASHER, SPRING	1					
12	3JD–25926–00	.BOLT	1					
13	JX2–25961–00	.NUT	1					
14	JX2–W0045–11	.BRAKE PAD KIT	1					
15	3TB–25933–00	.WASHER, PAD PIN	2					
16	1UY–25825–51	.CAP	1					
17	JX2–2580U–02	CALIPER ASSY (RIGHT)	1					
18	3TB–W0057–00	.PISTON ASSY, CALIPER	2					
19	3GD–W0047–00	..CALIPER SEAL KIT	1					
20	1UY–25937–51	.BOOT 2	1					
21	3JD–25917–00	.BOOT, CALIPER	1					
22	JX2–25919–00	.SUPPORT, PAD	1					
23	1UY–25824–51	.SCREW, BLEED	1					
24	1UY–25926–51	.BOLT	1					
25	1UY–25938–51	.WASHER, SPRING	1					
26	3JD–25926–00	.BOLT	1					
27	JX2–25961–00	.NUT	1					

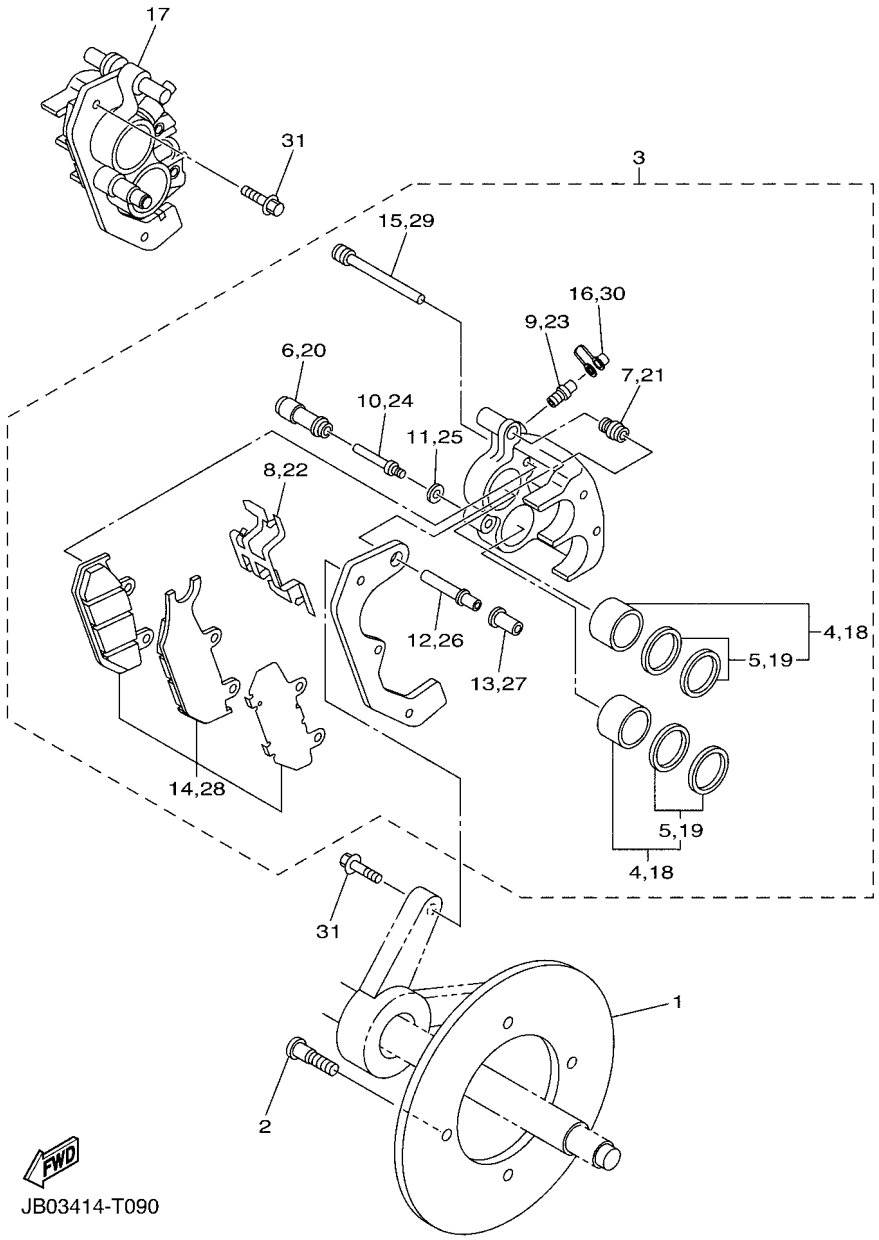

FIG. 16 BRAKE 3

REF. NO.	PART NO.	DESCRIPTION	JB64					REMARKS
28	JX2–W0045–21	.BRAKE PAD KIT	1					
29	3TB–25933–00	.WASHER, PAD PIN	2					
30	1UY–25825–51	.CAP	1					
31	90105–102A9	BOLT, FLANGE	4					

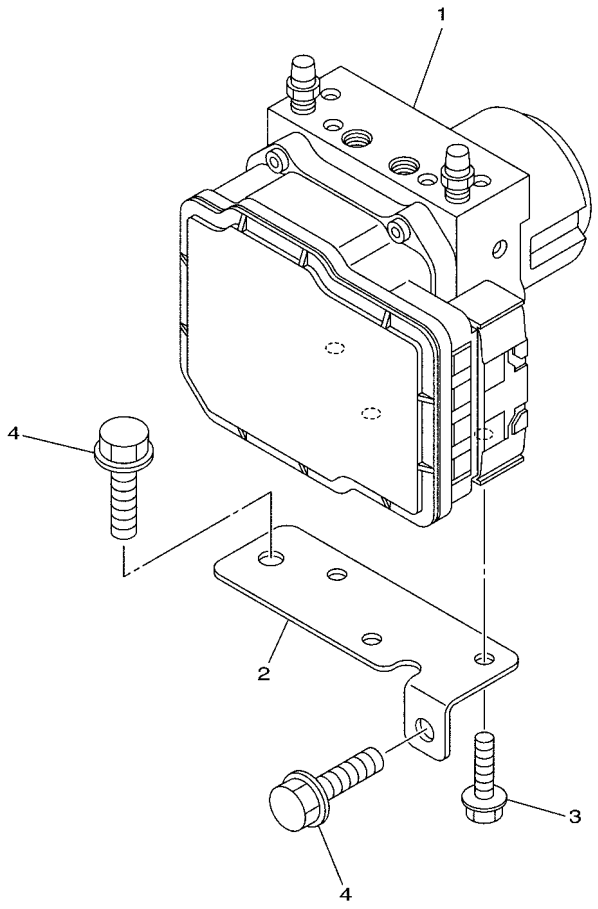

FWD

JB21010-P200

FIG. 17 BRAKE 4

REF. NO.	PART NO.	DESCRIPTION	JB64					REMARKS
1	JB2–85930–09	HYDRAULIC UNIT ASSY	1					
2	JB2–27275–00	PLATE	1					
3	95812–06010	BOLT, FLANGE	3					
4	95812–08012	BOLT, FLANGE	2					

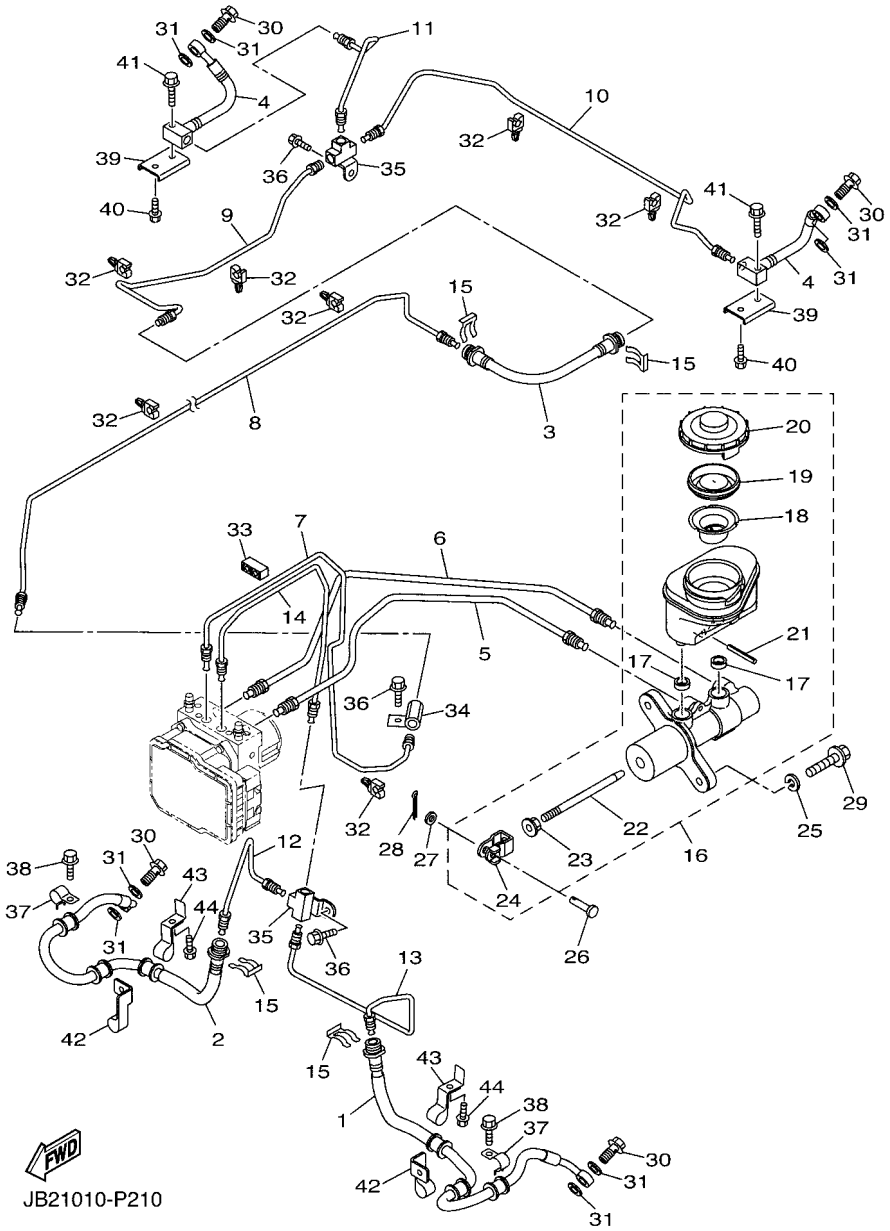

FIG. 18 FRONT MASTER CYLINDER

REF. NO.	PART NO.	DESCRIPTION	JB64					REMARKS
1	JB2–25872–00	HOSE, BRAKE 1	1					
2	JB2–25873–00	HOSE, BRAKE 2	1					
3	JB2–25874–00	HOSE, BRAKE	1					
4	JB2–2581J–00	HOSE, BRAKE 4	2					
5	JB2–2588H–00	PIPE, BRAKE 9	1					
6	JB2–2588J–00	PIPE, BRAKE 10	1					
7	JB2–25871–00	PIPE, BRAKE	1					
8	JX2–25882–10	PIPE, BRAKE 2	1					
9	JB2–25883–00	PIPE, BRAKE 3	1					
10	JB2–2588A–00	PIPE, BRAKE 4	1					
11	JB2–2588B–00	PIPE, BRAKE 5	1					
12	JX2–2588C–10	PIPE, BRAKE 6	1					
13	JY2–2588D–00	PIPE, BRAKE 7	1					
14	JB2–2588E–00	PIPE, BRAKE 8	1					
15	2GU–25866–00	CIRCLIP	4					
16	JB2–2583T–00	MASTER CYLINDER ASSY	1					
17	JB2–26326–00	.GROMMET	2					
18	JB2–25896–00	.PLATE, RESERVOIR	1					
19	JB2–25816–00	.SEAL, DUST	1					
20	JB2–25852–00	.CAP, RESERVOIR	1					
21	JB2–25826–00	.BOLT 3	1					
22	JB2–25880–00	.PUSH ROD COMP.	1					
23	JB2–27218–00	.NUT	1					
24	JB2–27222–00	.JOINT	1					
25	92902–08100	WASHER, SPRING	2					
26	JB2–27229–00	PIN, JOINT	1					
27	90201–08088	WASHER, PLATE	1					

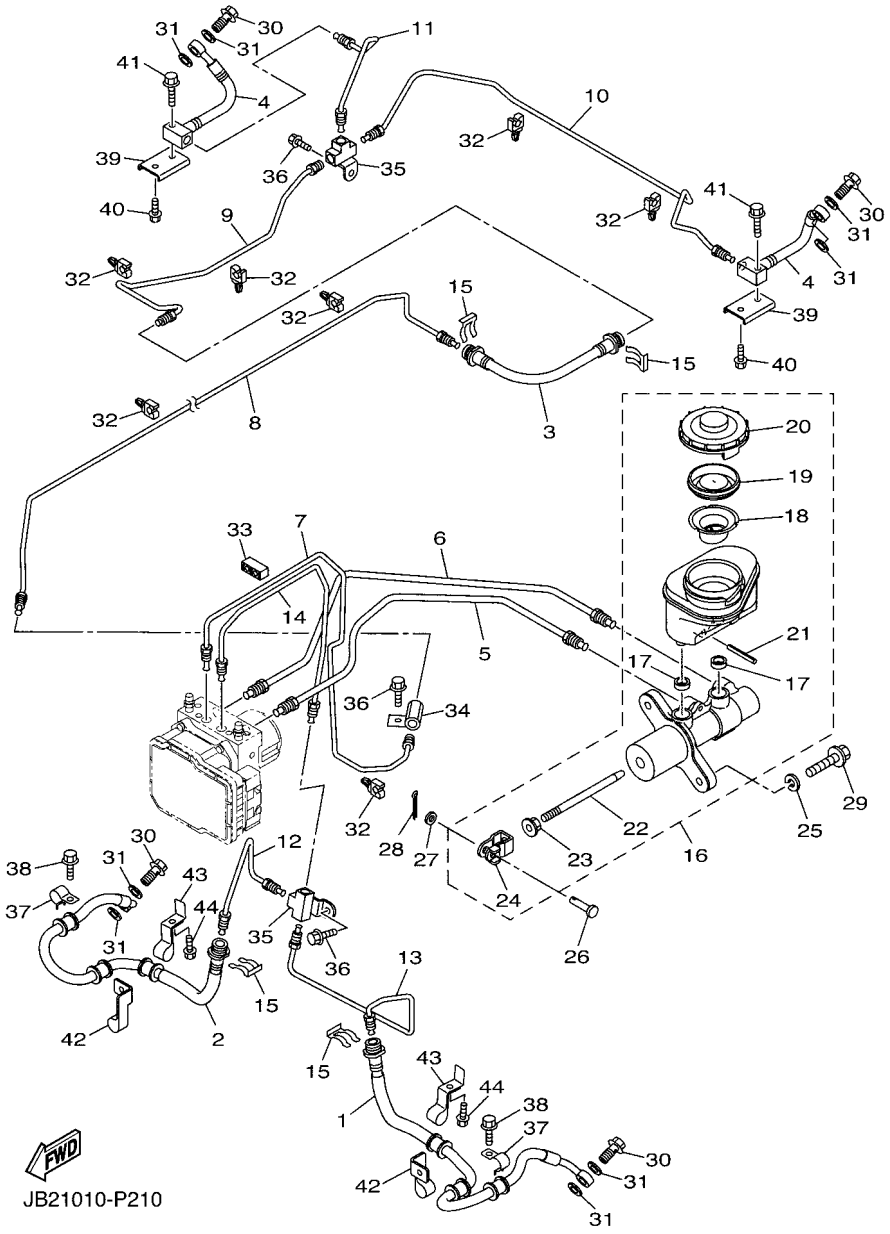

FIG. 18 FRONT MASTER CYLINDER

REF. NO.	PART NO.	DESCRIPTION	JB64					REMARKS
28	91490–25020	PIN. COTTER	1					
29	95812–08025	BOLT, FLANGE	2					
30	90401–10015	BOLT, UNION	4					
31	90201–10118	WASHER, PLATE	8					
32	5GM–81677–00	CLAMP 1	7					
33	90464–04002	CLAMP	2					
34	JX2–25885–11	JOINT	1					
35	JX2–2582A–00	JOINT	2					
36	95022–06012	BOLT, FLANGE	3					
37	5KM–25875–00	HOLDER, BRAKE HOSE 1	2					
38	95D02–06012	BOLT, FLANGE DEEP RECESS	2					
39	JB2–25876–00	HOLDER, BRAKE HOSE 2	2					
40	95D02–06012	BOLT, FLANGE DEEP RECESS	2					
41	95D02–06025	BOLT, FLANGE DEEP RECESS	2					
42	JX2–25887–00	HOLDER, BRAKE HOSE	2					
43	JX2–2587A–00	HOLDER, BRAKE HOSE	2					
44	90109–06302	BOLT	2					

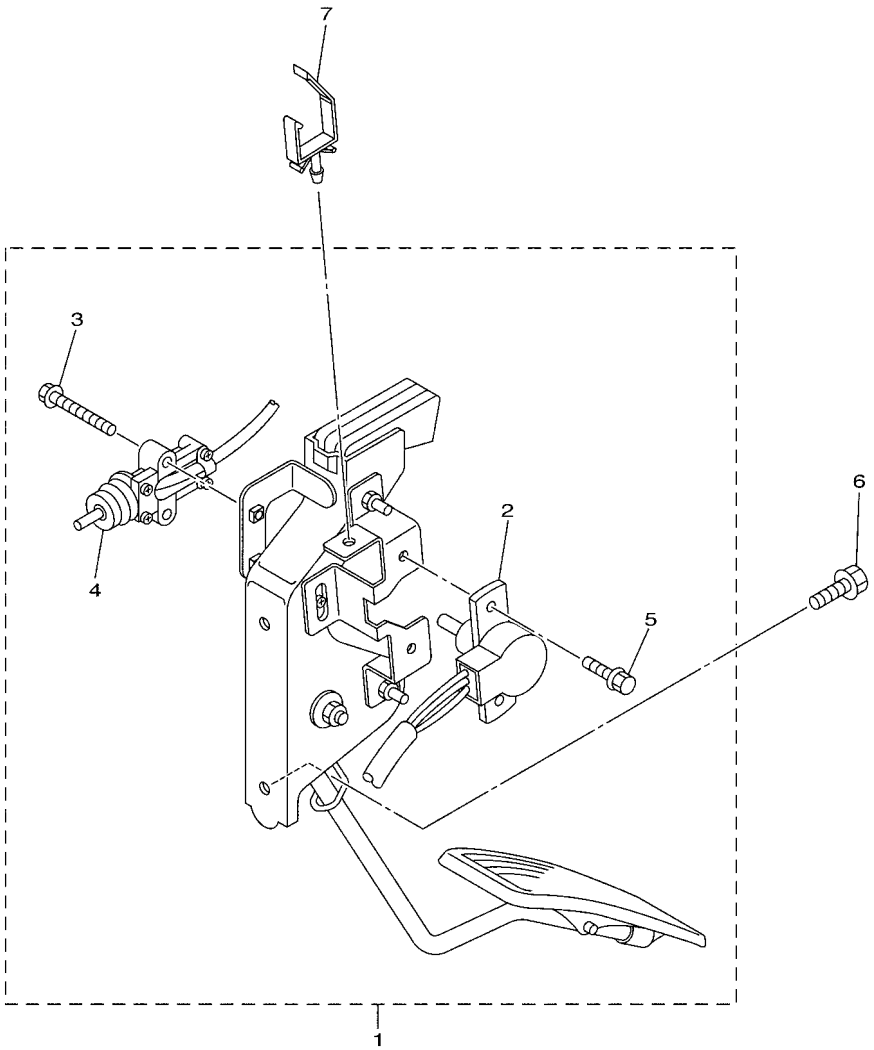

JB21010-P220

FIG. 19 ACCELERATOR

REF. NO.	PART NO.	DESCRIPTION	JB64					REMARKS
1	JY2–27801–01	ACCEL PEDAL ASSY	1					
2	JN9–85885–00	.THROTTLE SENSORASSY	1					
3	90105–05331	.BOLT, FLANGE	2					
4	JF7–82817–22	.SWITCH	1					
5	97507–05512	.BOLT, WITH WASHER	2					
6	95D02–06012	BOLT, FLANGE DEEP RECESS	2					
7	90464–16021	CLAMP	1					

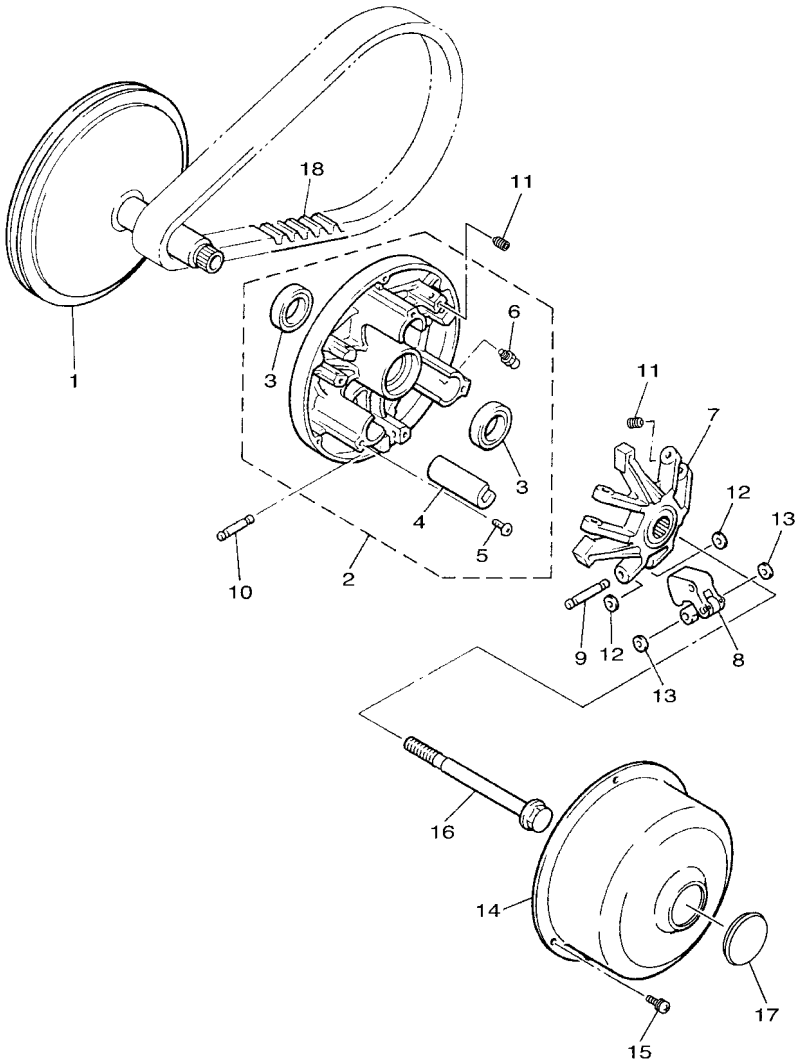

JB62010-S200

FIG. 20 PRIMARY SHEAVE

REF. NO.	PART NO.	DESCRIPTION	JB64					REMARKS
1	JY2–46210–01	PRIMARY FIXED SHEAVE COMP.	1					
2	JY2–46220–23	PRIMARY SLIDING SHEAVE COMP.	1					
3	JY2–4624A–00	.OIL SEAL 1	2					
4	JY2–46253–00	.SLIDER	3					
5	JY2–44189–00	.SCREW	3					
6	JY2–2135J–00	.NIPPLE	1					
7	JY2–46251–21	SPIDER	1					
8	JY2–46205–24	WEIGHT LINK ASSY	3					
9	JY2–46236–20	PIN, WEIGHT	3					
10	JY2–46237–20	PIN, WEIGHT 2	3					
11	90113–04004	BOLT, SET	6					
12	JY2–45618–00	WASHER, 1	6					
13	JY2–45621–00	WASHER, 2	6					
14	JY2–46231–22	CAP	1					
15	JY2–45282–00	SCREW	3					
16	JY2–46249–00	BOLT	1					
17	JY2–47339–00	PLUG	1					
18	JX4–46241–00	BELT	1					

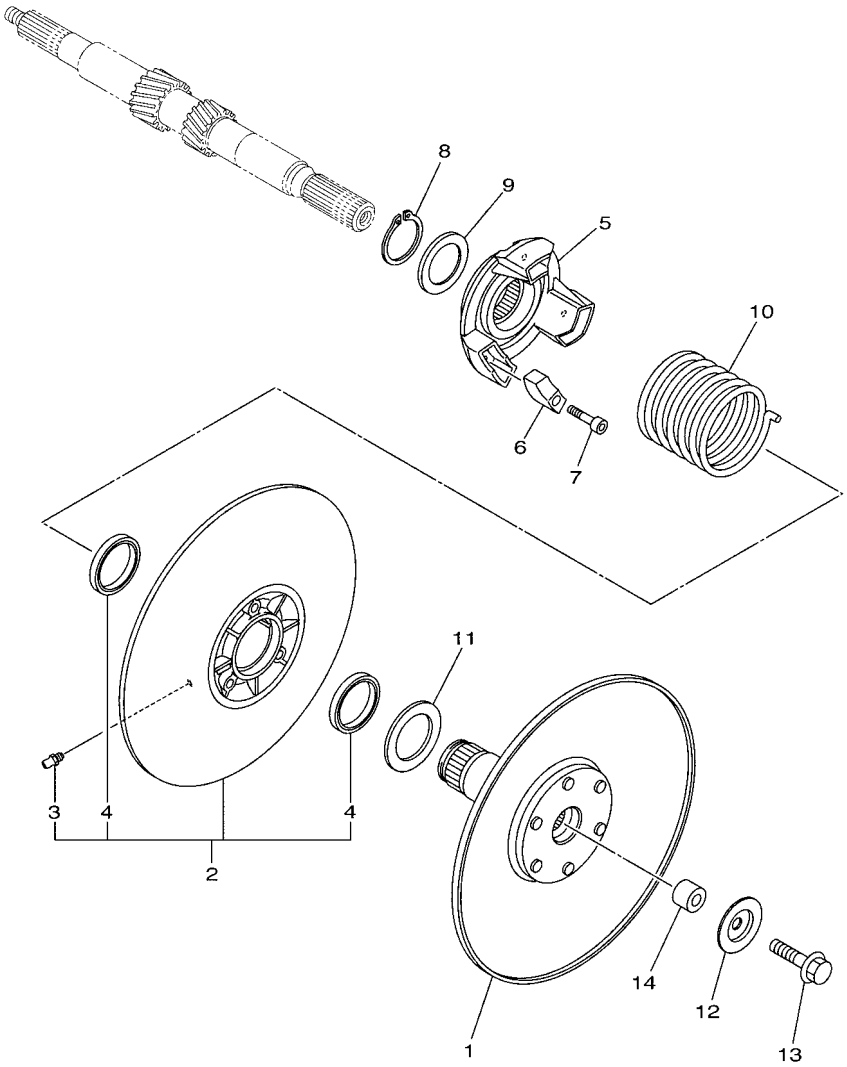

JB23411-T230

FIG. 21 SECONDARY SHEAVE

REF. NO.	PART NO.	DESCRIPTION	JB64					REMARKS
1	JB2–46260–11	SECONDARY FIXED SHEAVE COMP.	1					
2	JY2–46270–21	SECONDARY SLIDING SHEAVE COMP.	1					
3	JY2–2135J–00	.NIPPLE	1					
4	JY2–4624B–00	.OIL SEAL 2	2					
5	JB2–46284–00	SEAT, SECONDARY SPRING	1					
6	JY2–17688–00	SHOE, RAMP	3					
7	JY2–46159–00	BOLT 3	3					
8	JY2–45531–00	CLIP, DRIVE SHAFT	1					
9	JY2–46374–00	COLLAR, SPRING	1					
10	JY2–46275–00	SPRING, CLUTCH 1	1					
11	JY2–45677–00	WASHER	1					
12	90209–08013	WASHER	1					
13	90105–08002	BOLT, FLANGE	1					
14	90387–08100	COLLAR	1					

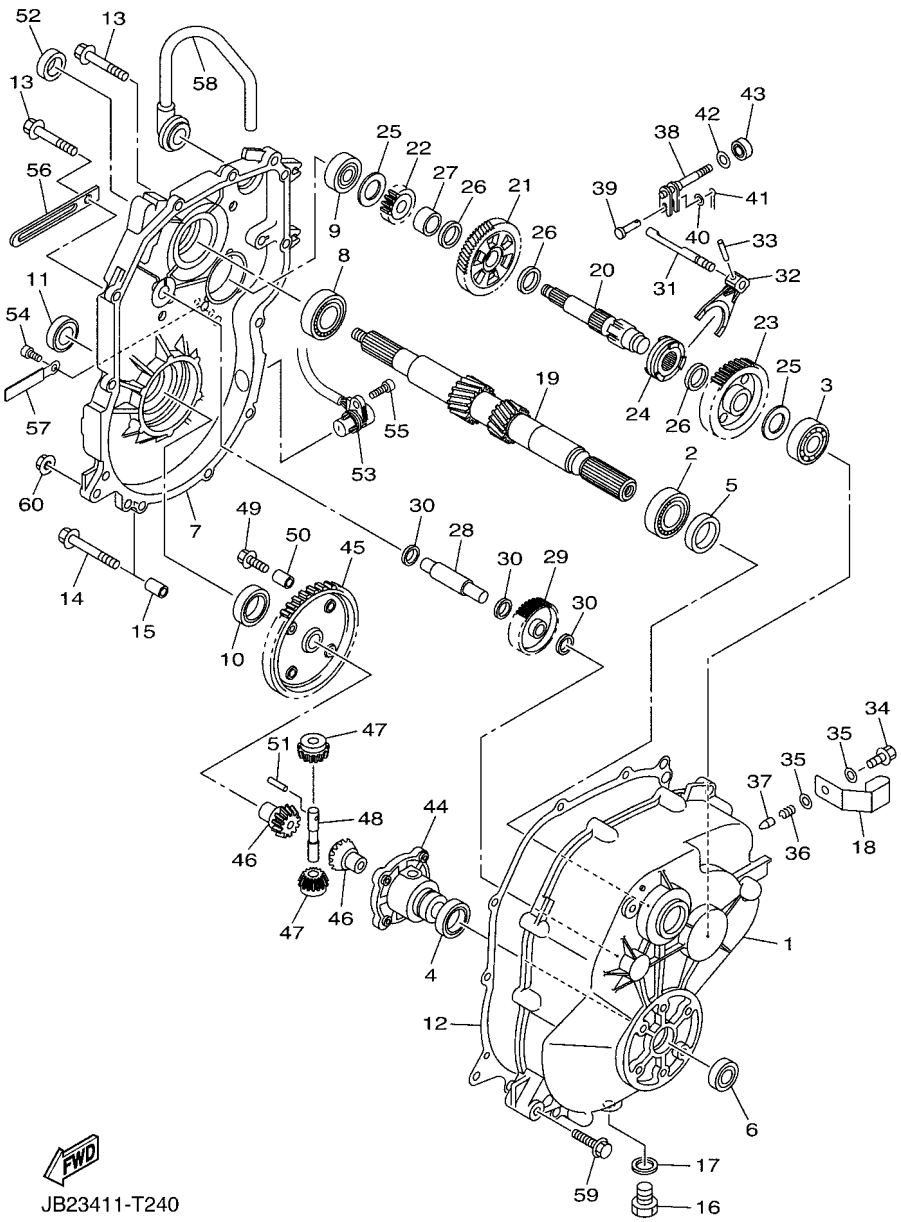

FIG. 22 TRANSMISSION 1

REF. NO.	PART NO.	DESCRIPTION	JB64					REMARKS
1	JX4–46311–11	CASE, TRANSMISSION 1	1					
2	93306–20548	BEARING	1					
3	93306–20401	BEARING	1					
4	93306–00810	BEARING	1					
5	93102–25017	OIL SEAL	1					
6	93102–25360	OIL SEAL	1					
7	JB2–46312–00	CASE, TRANSMISSION 2	1					
8	93306–20421	BEARING	1					
9	93306–20401	BEARING	1					
10	93306–00810	BEARING	1					
11	93102–25360	OIL SEAL	1					
12	JX4–46319–00	GASKET	1					
13	95D32–08040	BOLT, FLANGE DEEP RECESS	9					
14	95822–08050	BOLT, FLANGE	2					
15	99530–12016	PIN, DOWEL	2					
16	90340–14036	PLUG, STRAIGHT SCREW	1					
17	90430–14043	GASKET	1					
18	90465–06011	CLAMP	1					
19	JB2–46321–00	SHAFT, INPUT	1					
20	J38–46351–00	SHAFT, COUNTER	1					
21	JB2–46361–20	GEAR, COUNTER 1	1					
22	JB2–46362–00	GEAR, COUNTER 2	1					
23	J38–46363–00	GEAR, REVERSE	1					
24	JY2–4636A–00	DOG, CLUTCH	1					
25	90201–20611	WASHER, PLATE	2					
26	90201–257J2	WASHER, PLATE	3					
27	90387–252M8	COLLAR	1					

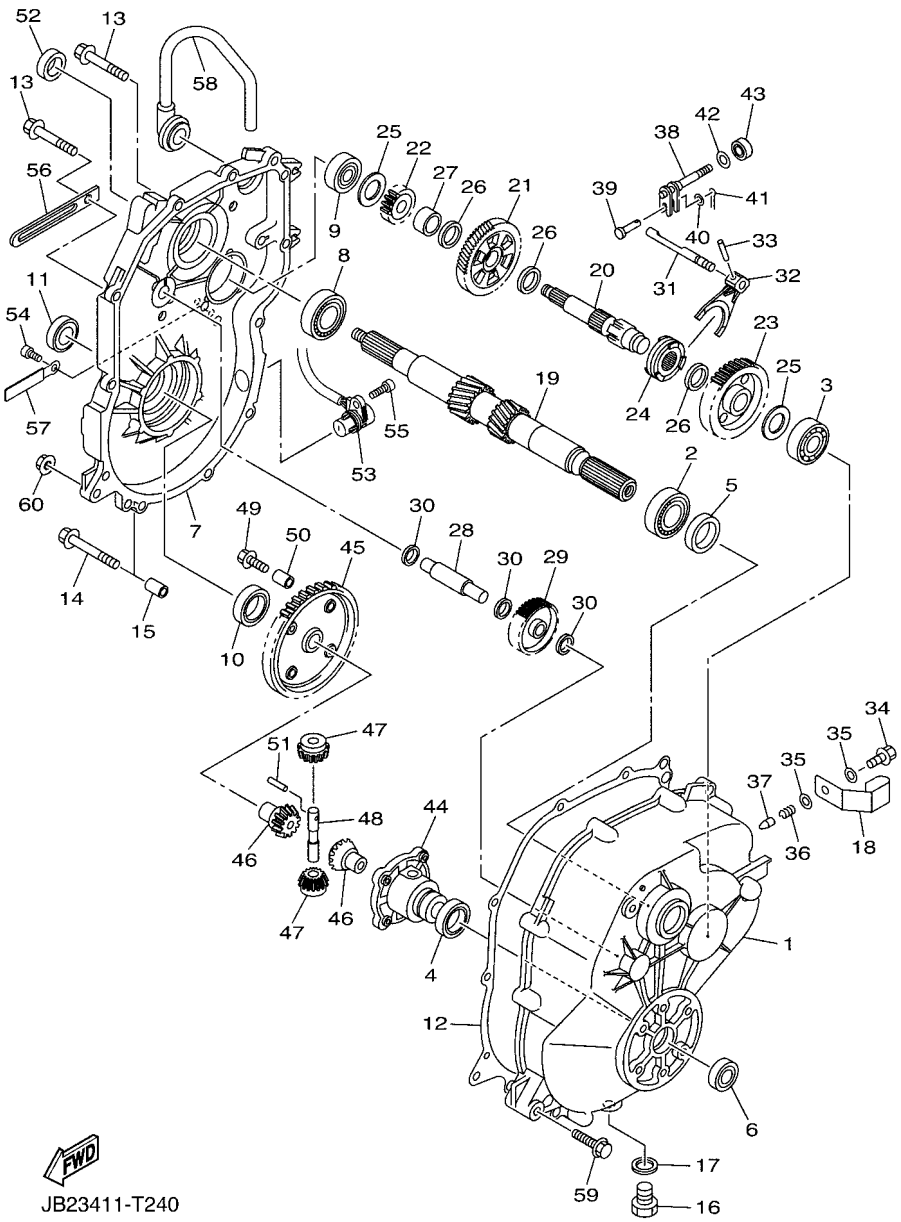

FIG. 22 TRANSMISSION 1

REF. NO.	PART NO.	DESCRIPTION	JB64					REMARKS
28	J38–46348–00	SHAFT 2	1					
29	J38–46356–00	GEAR, IDLER	1					
30	90201–17713	WASHER, PLATE	3					
31	JX4–4633A–00	BAR, SHIFT FORK GUIDE	1					
32	J38–46338–00	FORK, SHIFT	1					
33	91609–40020	PIN, SPRING	1					
34	90101–08344	BOLT	1					
35	90430–08119	GASKET	2					
36	90501–10060	SPRING, COMPRESSION	1					
37	90249–07190	PIN	1					
38	JX4–46384–00	LEVER, SHIFT 3	1					
39	91702–06022	PIN, CLEVIS	1					
40	92902–06200	WASHER	1					
41	91402–20012	PIN, COTTER	1					
42	90201–12166	WASHER, PLATE	1					
43	93102–12224	OIL SEAL	1					
44	JB2–46411–00	CASE, DIFFERENTIAL	1					
45	JB2–46421–10	GEAR, RING	1					
46	JB2–46414–00	GEAR, DIFFERENTIAL SIDE	2					
47	JB2–46415–00	PINION, DIFFERENTIAL	2					
48	JB2–46417–00	PIN, DIFFERENTIAL	1					
49	90105–10348	BOLT, FLANGE	4					
50	99530–14016	PIN, DOWEL	2					
51	91609–40040	PIN, SPRING	1					
52	93102–20281	OIL SEAL (SD 20-35-5)	1					
53	JB2–86281–00	SENSOR, SPEED	1					
54	91312–06012	BOLT, HEXAGON SOCKET HEAD	1					

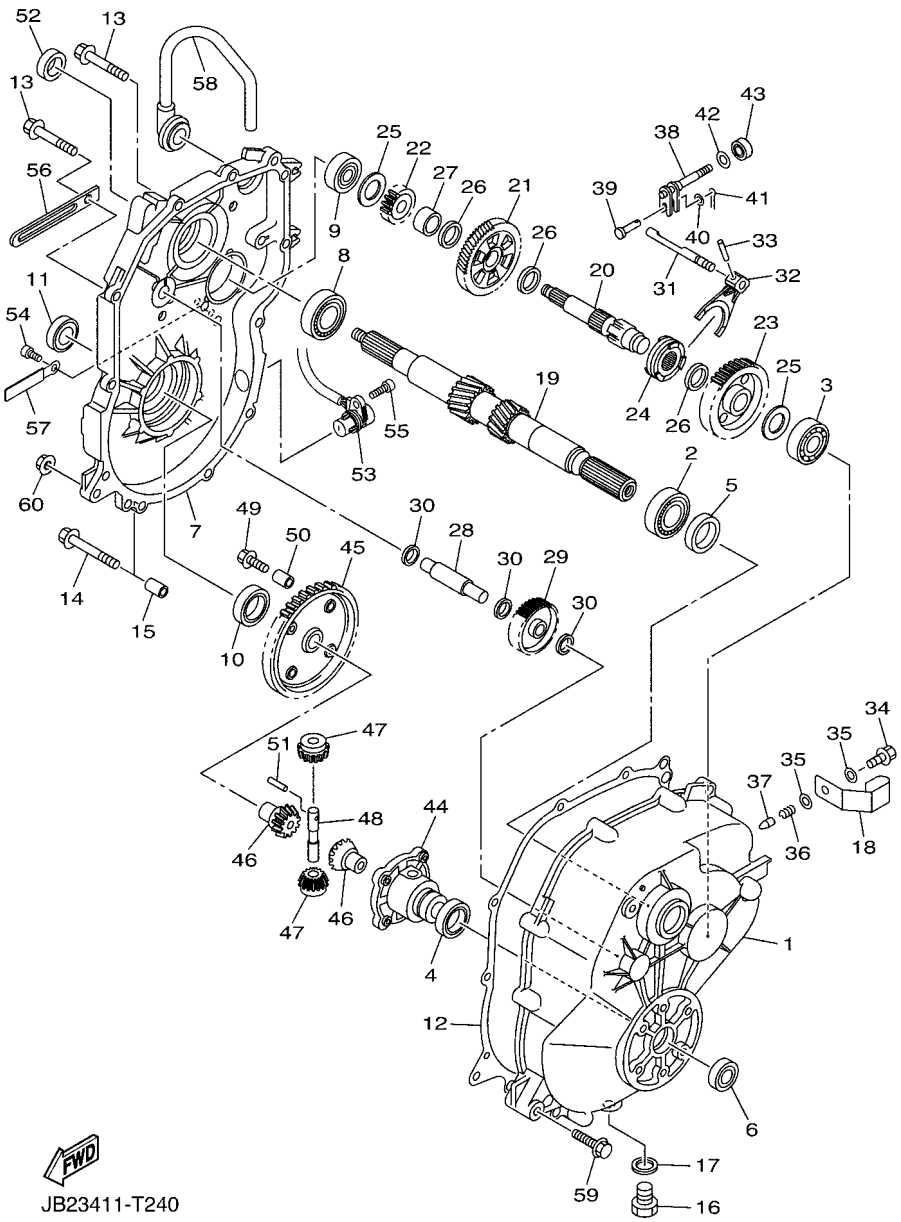

FIG. 22 TRANSMISSION 1

REF. NO.	PART NO.	DESCRIPTION	JB64					REMARKS
55	90110–06091	BOLT, HEXAGON SOCKET HEAD	1					
56	90462–08007	CLAMP	1					
57	90462–06007	CLAMP	1					
58	JN3–47559–00	CAP 2	1					
59	95812–08075	BOLT, FLANGE	1					
60	90179–08491	NUT	1					

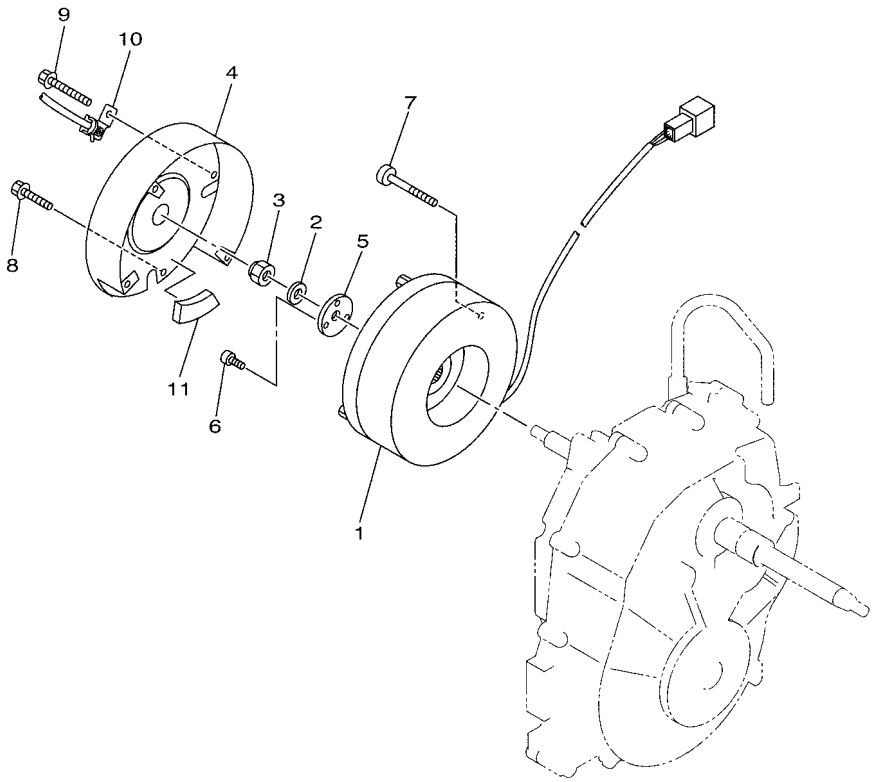

JY66010-K240

FIG. 23 TRANSMISSION 2

REF. NO.	PART NO.	DESCRIPTION	JB64					REMARKS
1	JX2–86290–00	ELECTRO MAGNETIC BRAKE ASSY	1					
2	92907–10600	WASHER, PLATE	1					
3	95602–10100	NUT, U	1					
4	JX2–8234W–01	COVER, CAP	1					
5	JX2–4633H–00	PLATE 2	1					
6	90110–05032	BOLT, HEXAGON SOCKET HEAD	3					
7	91317–08045	BOLT,HEX.SOCKET HEAD	3					
8	95D02–06010	BOLT, FLANGE DEEP RECESS	2					
9	90105–06452	BOLT, FLANGE	1					
10	JX2–83688–00	SENSOR ASSY	1					
11	JT4–48214–00	PAD	1					

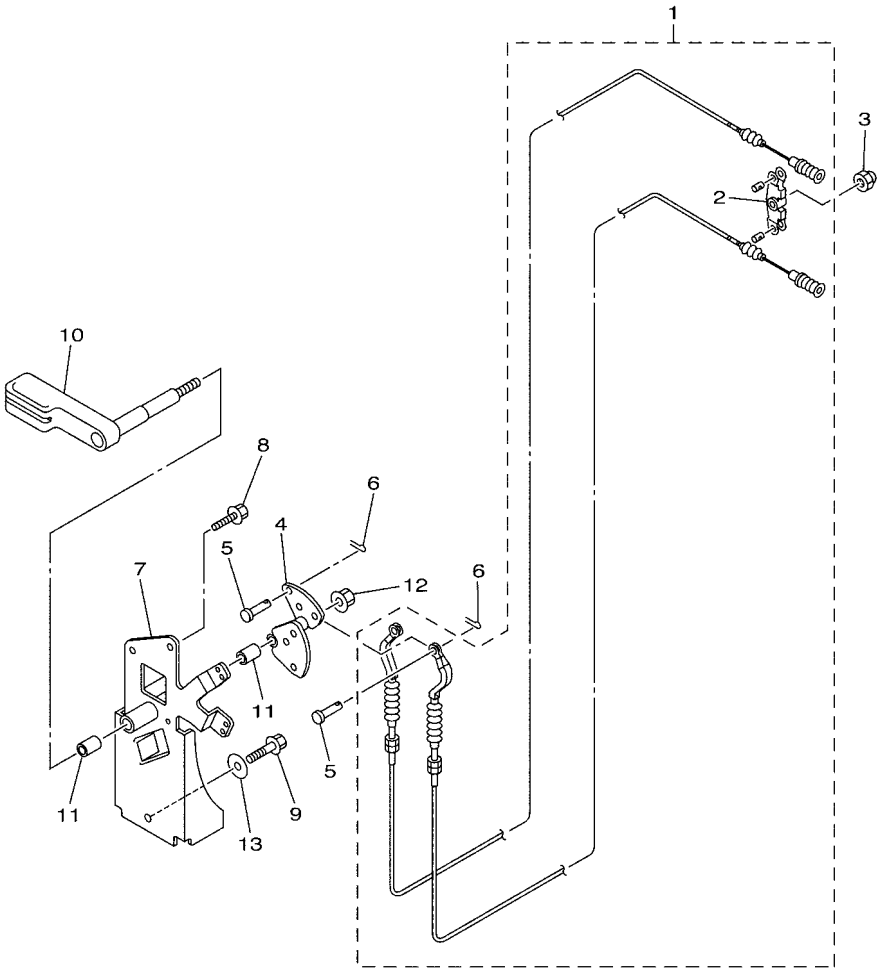

FWD

JY2A010-M270

FIG. 24 SHIFTER & CABLES

REF. NO.	PART NO.	DESCRIPTION	JB64					REMARKS
1	JX4–48330–02	CABLE END ASSY	1					
2	J38–46383–00	.LEVER, SHIFT 2	1					
3	95602–08100	NUT, U	1					
4	JR7–46382–00	LEVER, SHIFT 1	1					
5	91702–06014	PIN, CLEVIS	2					
6	91402–20012	PIN, COTTER	2					
7	JX4–46372–01	BRACKET, SHIFT WIRE	1					
8	95812–06016	BOLT, FLANGE	2					
9	95022–08016	BOLT, FLANGE	1					
10	JR7–46381–00	KNOB, SHIFT	1					
11	90383–12002	BUSH, FORMED	2					
12	95602–08200	NUT, U FLANGE	1					
13	90201–08326	WASHER, PLATE	1					

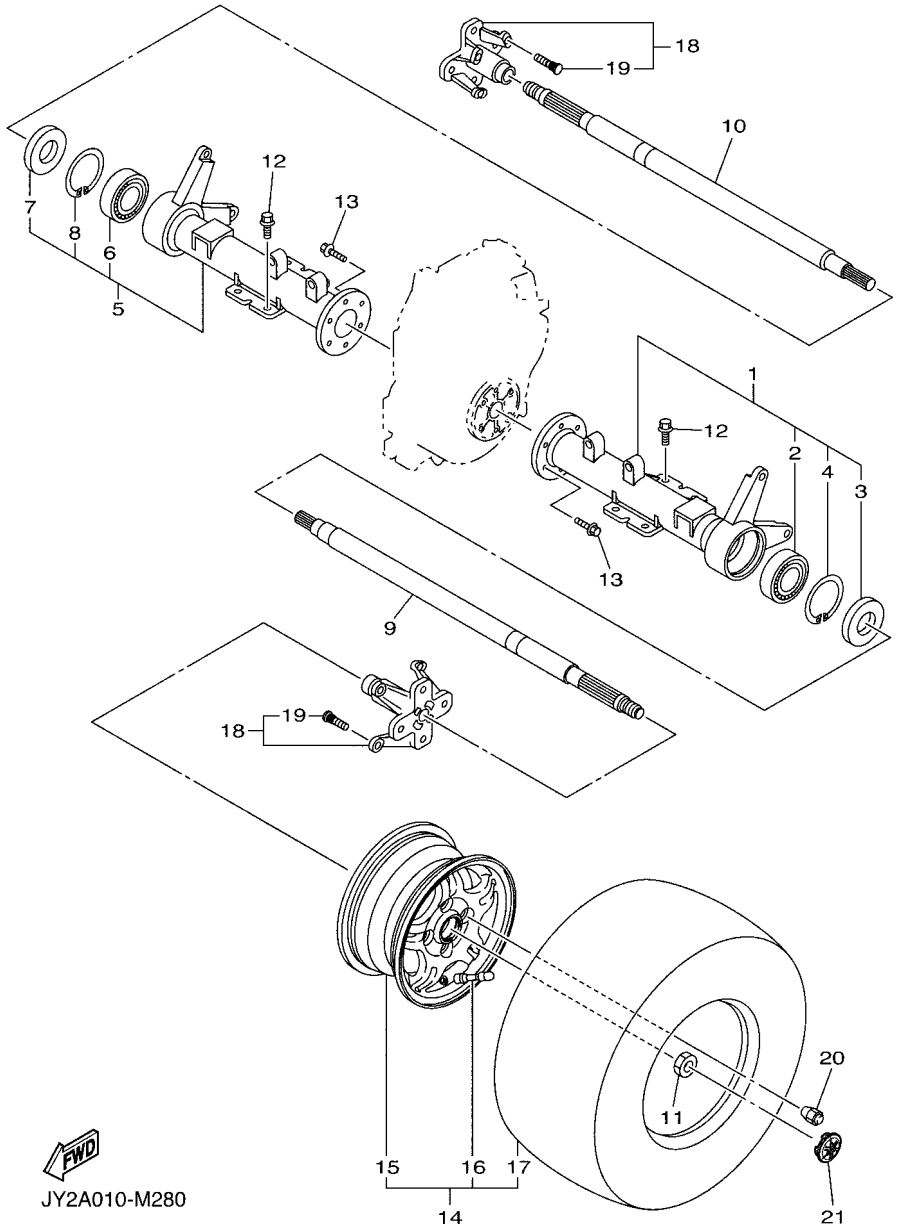

FIG. 25 REAR AXLE & WHEEL

REF. NO.	PART NO.	DESCRIPTION	JB64					REMARKS
1	JX2–46540–00	REAR AXLE HOUSING COMP.	1					
2	93306–30578	.BEARING	1					
3	93102–35109	.OIL SEAL (SD-35-62-6 HS)	1					
4	99009–62500	.CIRCLIP	1					
5	JX2–46550–00	REAR AXLE HOUSING COMP. 2	1					
6	93306–30578	.BEARING	1					
7	93102–35109	.OIL SEAL (SD-35-62-6 HS)	1					
8	99009–62500	.CIRCLIP	1					
9	JY2–46511–00	SHAFT, REAR AXLE 1 (L.H)	1					
10	JY2–46512–00	SHAFT, REAR AXLE 2 (R.H)	1					
11	90179–20016	NUT	2					
12	90101–10038	BOLT	8					
13	95812–10030	BOLT, FLANGE	12					
14	JB2–25100–00	WHEEL ASSY (190/50-12-4PR)	2					
15	JY8–25180–00	.WHEEL COMP. (ALUMINIUM)	1					
16	93900–00022	.VALVE, RIM (TR413)	1					TAIHEIYO
17	JB2–2510S–00	.TIRE (190/50-12-4PR KENDA)	1					
18	JB2–25310–00	HUB ASSY	2					
19	90114–10019	.BOLT, SERRATION	4					
20	90179–10031	NUT	8					
21	JY8–2512A–01	CAP, WHEEL	2					

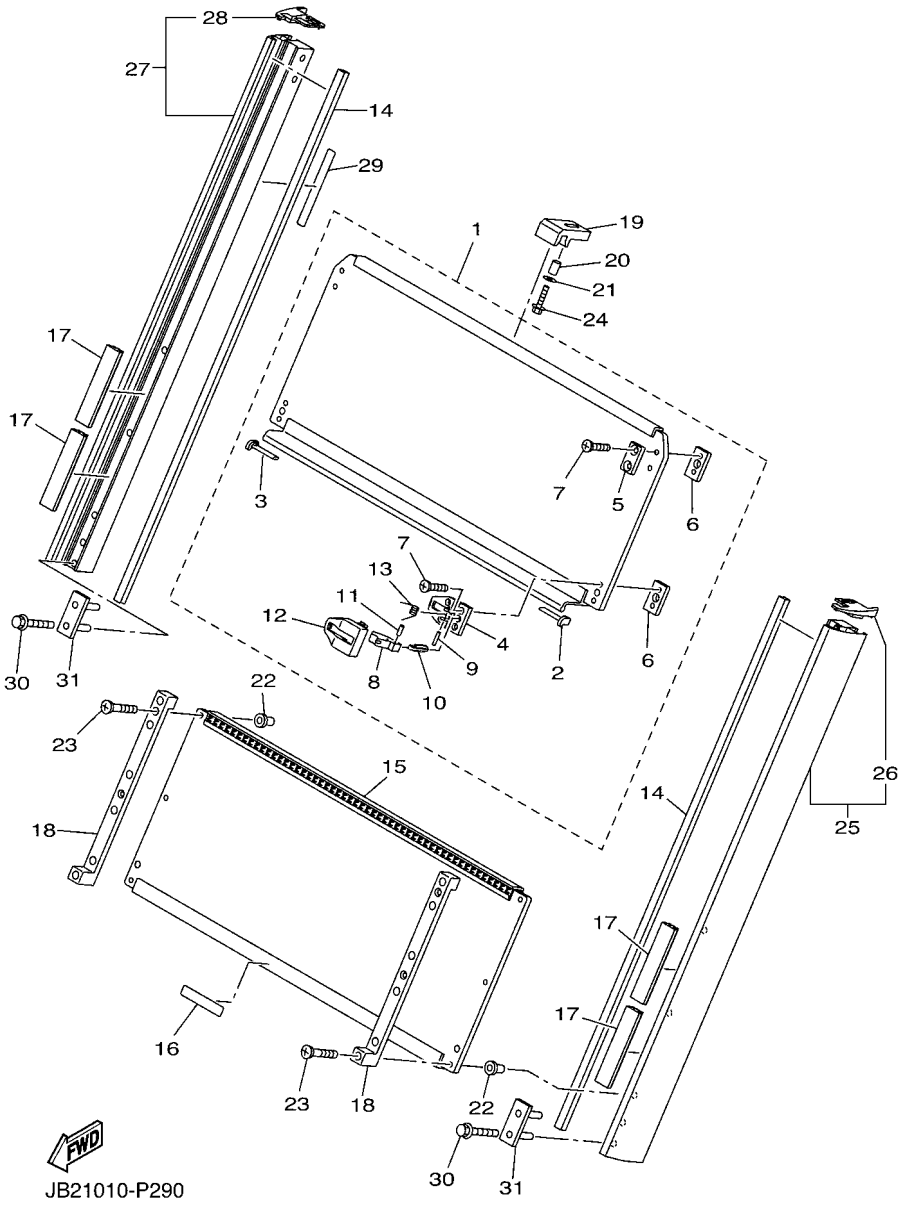

FIG. 26 WINDSHIELD

REF. NO.	PART NO.	DESCRIPTION	JB64					REMARKS
1	JB2–77201–02	UPPER WINDSHIELD ASSY	1					
2	JB2–77213–00	.TRIM, UPPER	1					
3	JB2–77214–00	.TRIM, LOWER	1					
4	JB2–77261–00	.LINING, SHROUD 1	2					
5	JB2–77262–00	.LINING, SHROUD 2	2					
6	JX4–77217–00	.NUT, WIND SHIELD	4					
7	98780–06014	.SCREW, FLAT HEAD	8					
8	JY3–77223–00	.FASTNER	2					
9	91690–20020	.PIN, SPRING	2					
10	JY2–77212–10	.BOLT, WIND SHIELD	2					
11	91690–30012	.PIN, SPRING	2					
12	JY3–77263–01	.LINING, SHROUD 3	2					
13	JY3–77174–00	.SPRING 1	2					
14	JB2–77233–01	TRIM, 7	2					
15	JB2–77202–02	LOWER WINDSHIELD ASSY	1					
16	JY4–77768–10	LABEL, WARNING 8	1					
17	JB2–77283–00	STRIPE 3	4					
18	JB2–77271–00	DAMPER, NOISE 11	2					
19	JB2–77275–00	DAMPER, NOISE 15	1					
20	90387–06553	COLLAR	1					
21	90201–06020	WASHER, PLATE	1					
22	90179–06020	NUT	6					
23	98780–06035	SCREW, FLAT HEAD	6					
24	95880–06025	BOLT, FLANGE	1					
25	JB2–7830A–00	ROOF SUPPORT ASSY 1	1					
26	JB2–7813F–00	.COVER, SIDE PILLAR (L.H)	1					
27	JB2–7830B–00	ROOF SUPPORT ASSY 2	1					

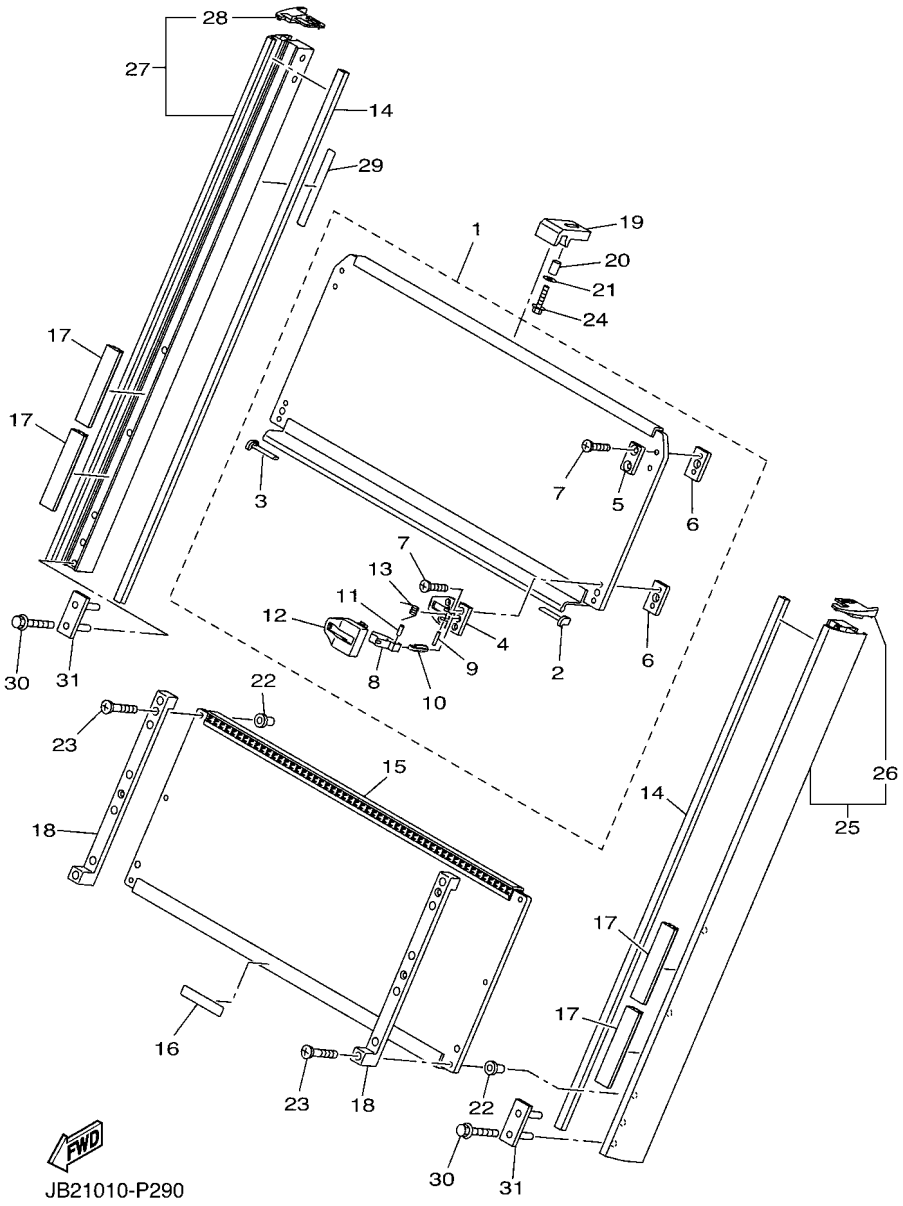

FIG. 26 WINDSHIELD

REF. NO.	PART NO.	DESCRIPTION	JB64					REMARKS
28	JB2–7813G–00	.COVER, SIDE PILLAR (R.H)	1					
29	JY2–7829A–20	PLATE, CAUTION	1					
30	95812–08055	BOLT, FLANGE	4					
31	JX4–7831L–00	REINFORCEMENT, ROOF SUPPORT 1	2					

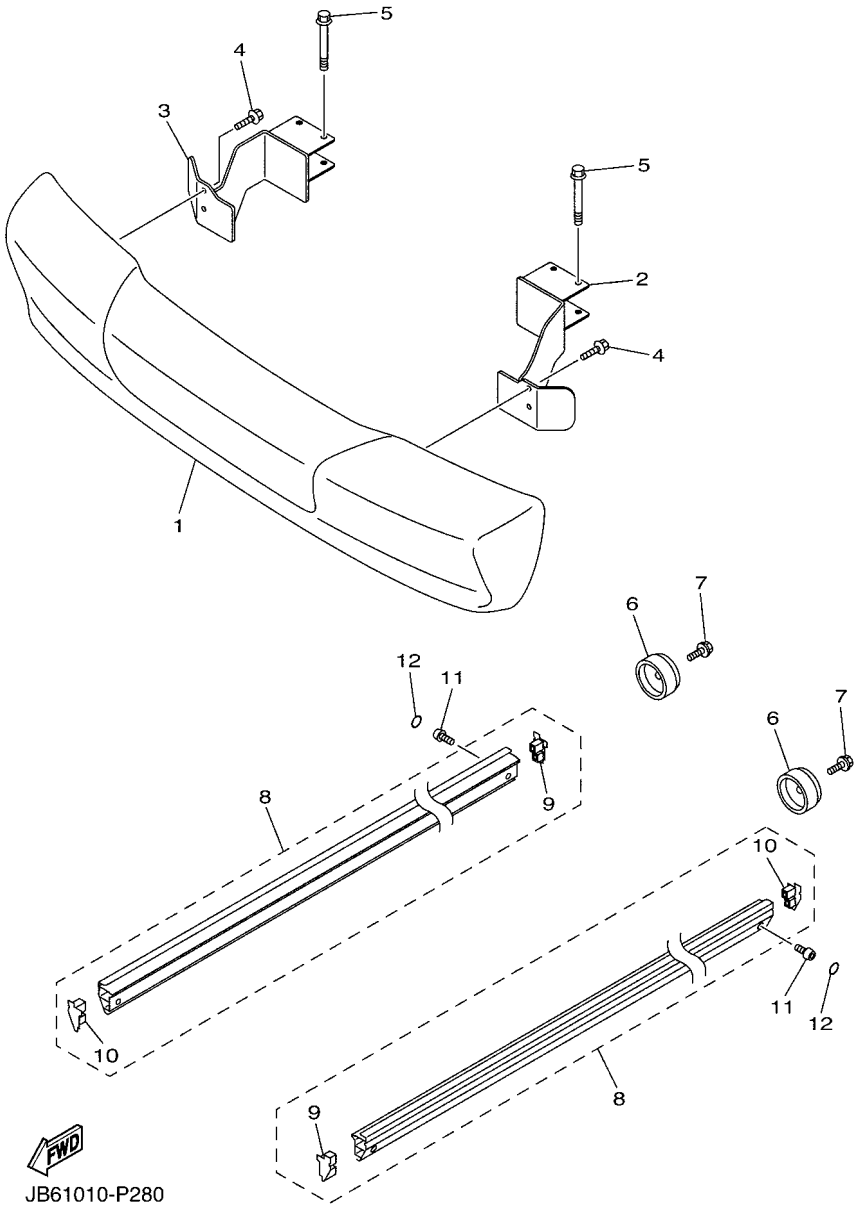

FIG. 27 BUMPER

REF. NO.	PART NO.	DESCRIPTION	JB64					REMARKS
1	JB2–77510–00	FRONT BUMPER COMP.	1					
2	JX4–78164–00	STAY, FRONT BUMPER (L.H)	1					
3	JX4–78165–00	STAY, FRONT BUMPER (R.H)	1					
4	95D32–06012	BOLT, FLANGE DEEP RECESS	4					
5	95827–08065	BOLT, FLANGE	4					
6	JX4–77520–00	BUMPER COMP 1	2					
7	95022–08025	BOLT, FLANGE	2					
8	JB2–78180–00	SIDE SILL PLATE ASSY	2					
9	JX4–7818E–00	.CAP, PROTECTOR END 1	1					
10	JX4–7818F–00	.CAP, PROTECTOR END 2	1					
11	90111–08027	BOLT,HEX. SOCKET BUTTON	4					
12	JF7–77563–00	COVER, 3	4					

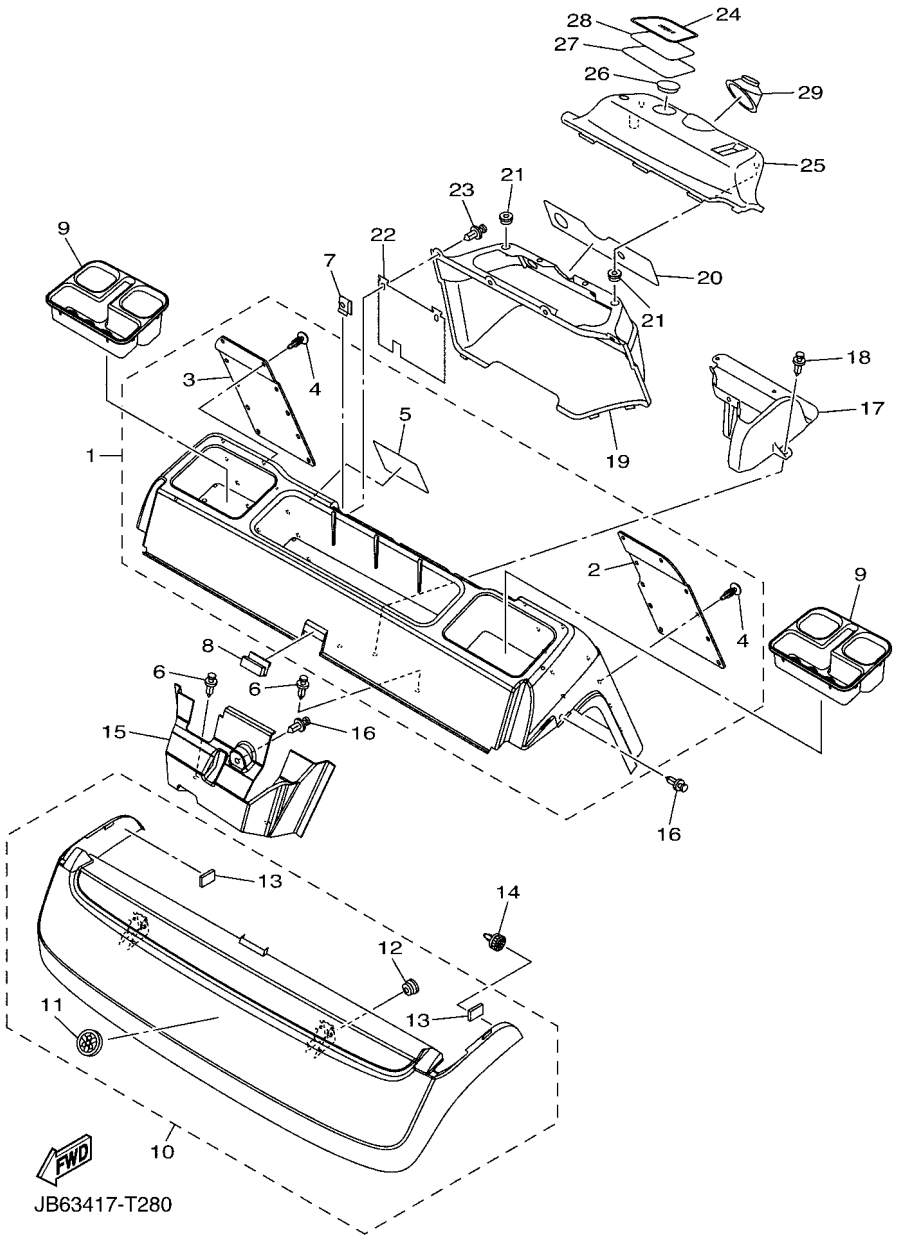

FIG. 28 BODY

REF. NO.	PART NO.	DESCRIPTION	JB64					REMARKS
1	JB2–78100–30	BODY SHELL PANEL ASSY	1					
2	JB2–78243–00	.MAT, REAR BODY SIDE (LH)	1					
3	JB2–78244–00	.MAT, REAR BODY SIDE (RH)	1					
4	90269–07064	.RIVET	20					
5	JB2–78298–20	.PLATE, CAUTION 2	1					
6	90269–10005	RIVET	4					
7	JX4–7814H–00	HOOK, BODY LOCK	4					
8	JY2–78328–20	SPACER 1	1					
9	JX4–7835E–00	HOLDER, BEVERAGE	2					
10	JX4–78101–00	BODY SHELL PANEL SUB-ASSY 1	1					UR FOR RW
	JX4–78101–60	BODY SHELL PANEL SUB-ASSY 1	1					UR FOR DNGM3
	JX4–78101–20	BODY SHELL PANEL SUB-ASSY 1	1					UR FOR DRMD
	JX4–78101–30	BODY SHELL PANEL SUB-ASSY 1	1					UR FOR DPBMC
	JX4–78101–10	BODY SHELL PANEL SUB-ASSY 1	1					UR FOR VDGS1
11	8AC–2414B–01	.EMBLEM	1					
12	90480–13398	.GROMMET	2					
13	JX4–77188–00	.STOPPER	2					
14	JX4–77157–00	PIN, HINGE	2					
15	JY2–78113–00	PANEL, SIDE	1					
16	90269–10005	RIVET	3					
17	JB2–27411–00	FOOTREST 1	1					
18	90269–10005	RIVET	2					
19	JB2–77711–00	PANEL, INSTRUMENT	1					
20	JB6–77741–10	INDICATOR 1	1					
21	90480–13567	GROMMET	2					
22	JX2–78181–00	PLATE 1	1					
23	90269–10005	RIVET	4					

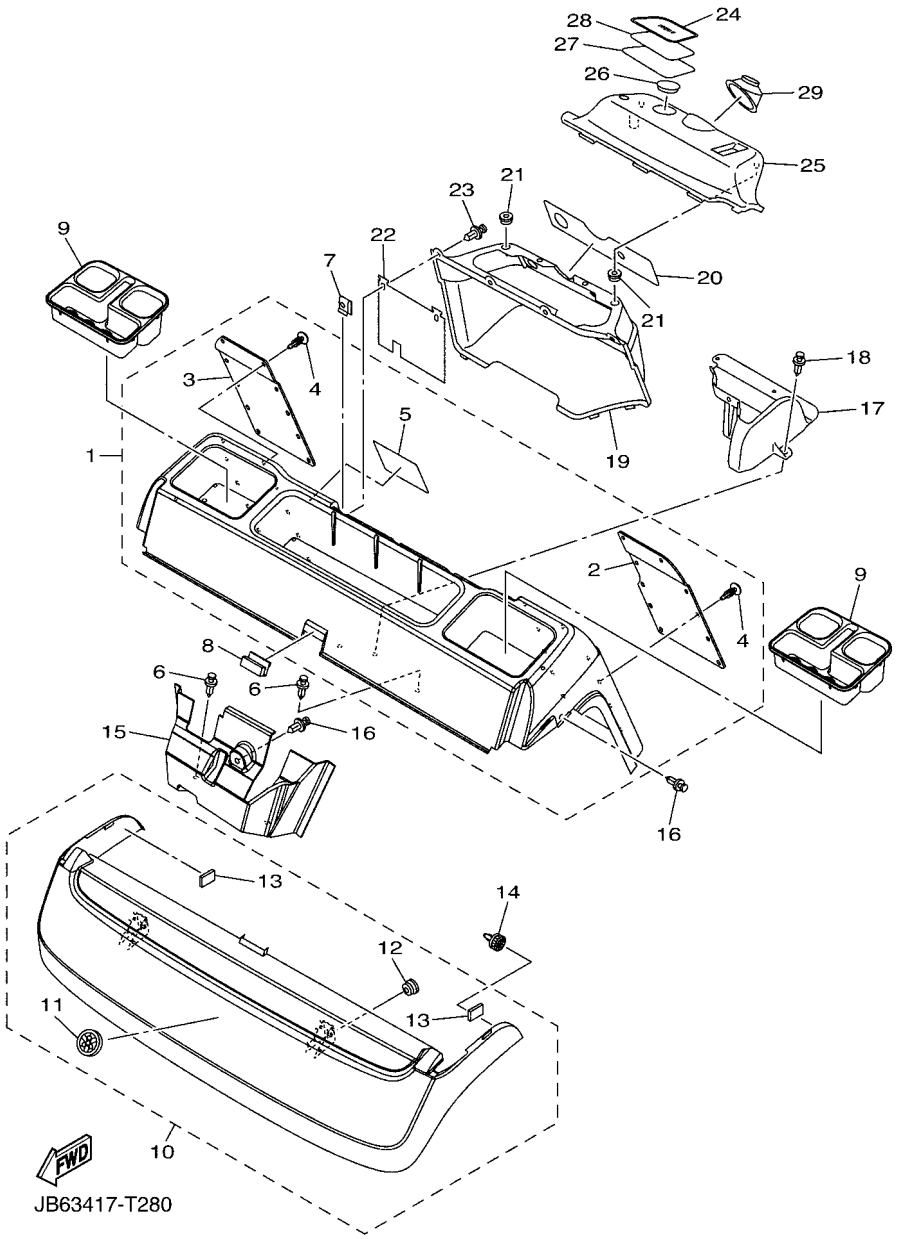

FIG. 28 BODY

REF. NO.	PART NO.	DESCRIPTION	JB64					REMARKS
24	JB6–77742–00	INDICATOR 2	1					
25	JB2–78139–00	CAP, END	1					
26	JB6–7811V–00	PROTECTOR 1	1					
27	JB6–78182–50	PLATE 2	1					
28	JB6–7717F–50	TAPE 2	1					
29	JX4–78273–00	COVER, HOLE	1					

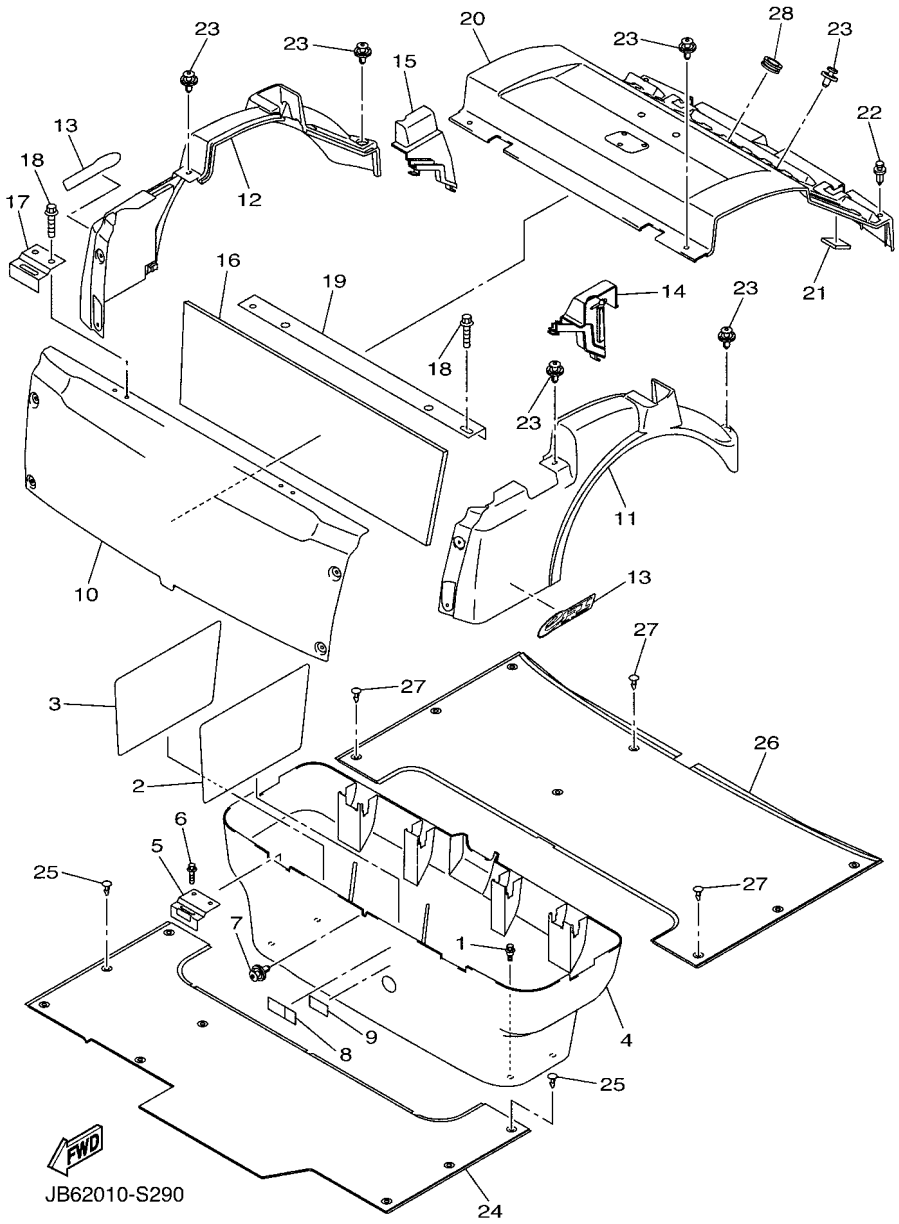

FIG. 29 BODY 2

REF. NO.	PART NO.	DESCRIPTION	JB64					REMARKS
1	90109–06212	BOLT	4					
2	JY2–78117–00	PLATE 1	1					
3	JY2–78118–00	PLATE 2	1					
4	JB2–78141–00	PANEL, INTERMEDIATE BODY	1					
5	JY2–78427–00	HINGE, SEAT 2	2					
6	95D02–06030	BOLT, FLANGE DEEP RECESS	4					
7	90269–07010	RIVET	1					
8	JN5–77741–11	INDICATOR 1	1					
9	JB3–77766–50	LABEL, WARNING 6	1					
10	JY2–78142–00	PANEL, REAR BODY	1					
11	JB2–78130–00	SHELL SIDE PANEL ASSY 1	1					UR FOR RW
	JB2–78130–60	SHELL SIDE PANEL ASSY 1	1					UR FOR DNGM3
	JB2–78130–20	SHELL SIDE PANEL ASSY 1	1					UR FOR DRMD
	JB2–78130–30	SHELL SIDE PANEL ASSY 1	1					UR FOR DPBMC
	JB2–78130–10	SHELL SIDE PANEL ASSY 1	1					UR FOR VDGS1
12	JB2–78140–00	SHELL SIDE PANEL ASSY 2	1					UR FOR RW
	JB2–78140–60	SHELL SIDE PANEL ASSY 2	1					UR FOR DNGM3
	JB2–78140–20	SHELL SIDE PANEL ASSY 2	1					UR FOR DRMD
	JB2–78140–30	SHELL SIDE PANEL ASSY 2	1					UR FOR DPBMC
	JB2–78140–10	SHELL SIDE PANEL ASSY 2	1					UR FOR VDGS1
13	JB2–781B1–00	GRAPHIC 1	2					
14	JX4–7832H–00	GROMMET, ROOF SUPPORT 3	1					
15	JX4–7833H–00	GROMMET, ROOF SUPPORT 4	1					
16	JY2–78251–00	PAD, SILENCER 1	1					
17	JX4–78427–00	HINGE, SEAT 2	2					
18	95802–06040	BOLT, FLANGE	6					
19	JB2–2254R–00	SUPPORT, BODY MOUNTING	1					

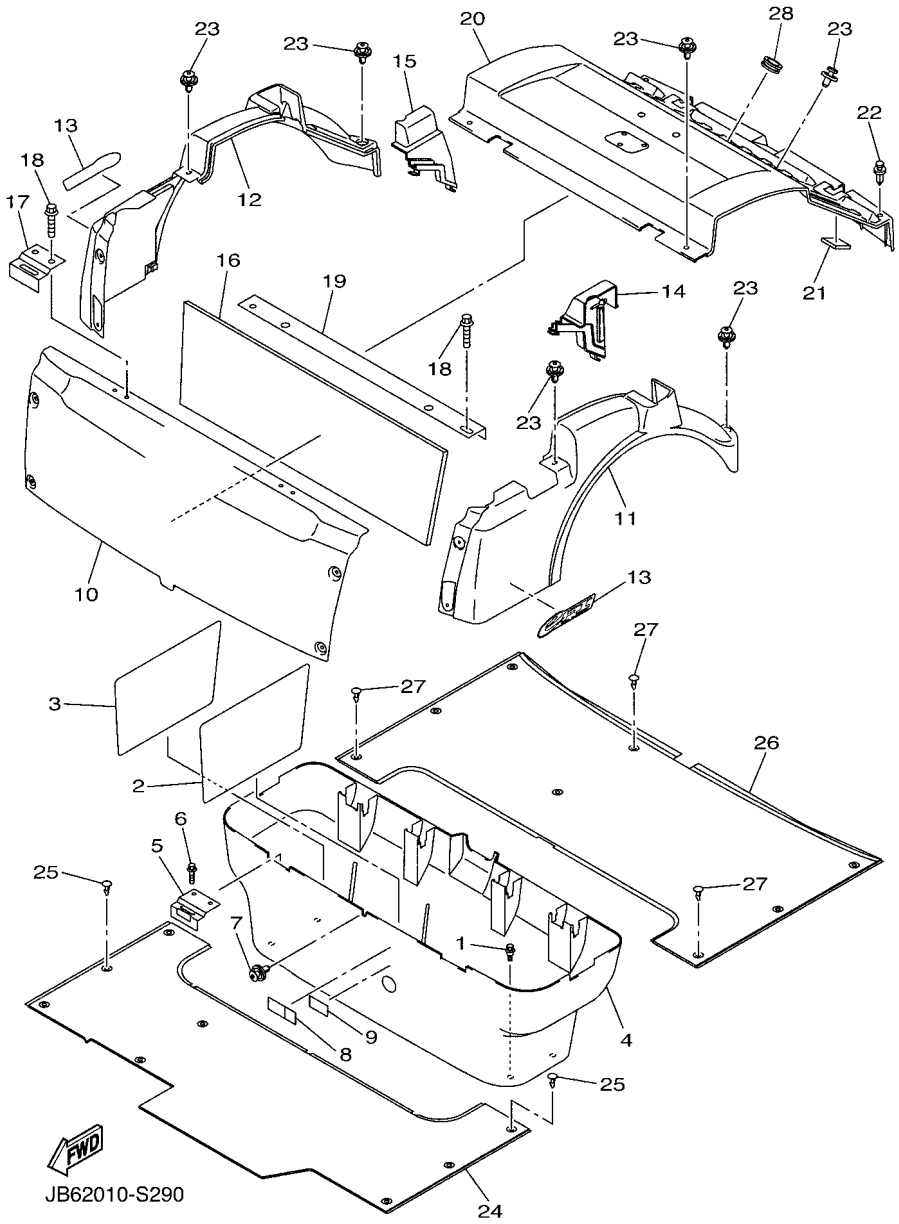

FIG. 29 BODY 2

REF. NO.	PART NO.	DESCRIPTION	JB64					REMARKS
20	JB2–78150–00	INSPECTION LID ASSY	1					
21	JX4–7814E–00	SEAL, BODY SIDE 1	4					
22	90269–10005	RIVET	2					
23	90269–07010	RIVET	16					
24	JB2–78231–00	MAT, MAIN FLOOR 1	1					
25	90269–07064	RIVET	9					
26	JB2–78241–00	MAT, REAR FLOOR	1					
27	90269–07064	RIVET	8					
28	90338–15004	PLUG	1					

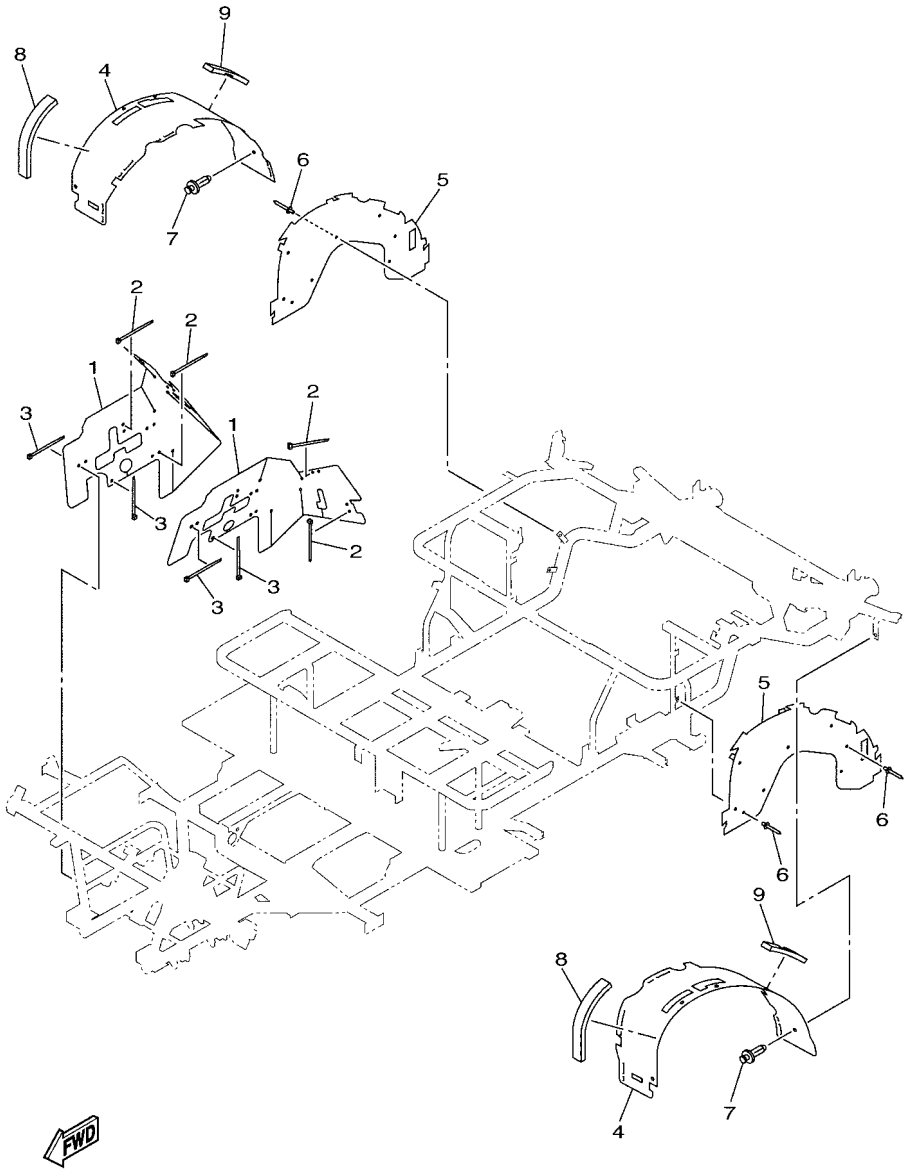

JB21010-P330

FIG. 30 BODY FITTING

REF. NO.	PART NO.	DESCRIPTION	JB64					REMARKS
1	JB2–78187–00	FLAP, FRONT FENDER	2					
2	90465–13152	CLAMP	8					
3	90465–13275	CLAMP	4					
4	JB2–78191–00	PANEL, REAR FENDER 1	2					
5	JB2–78192–00	PANEL, REAR FENDER 2	2					
6	90267–48101	RIVET, BLIND	18					
7	90269–10005	RIVET	4					
8	JX4–7825K–00	PAD, SILENCER 16	2					
9	90520–15007	DAMPER, PLATE	2					

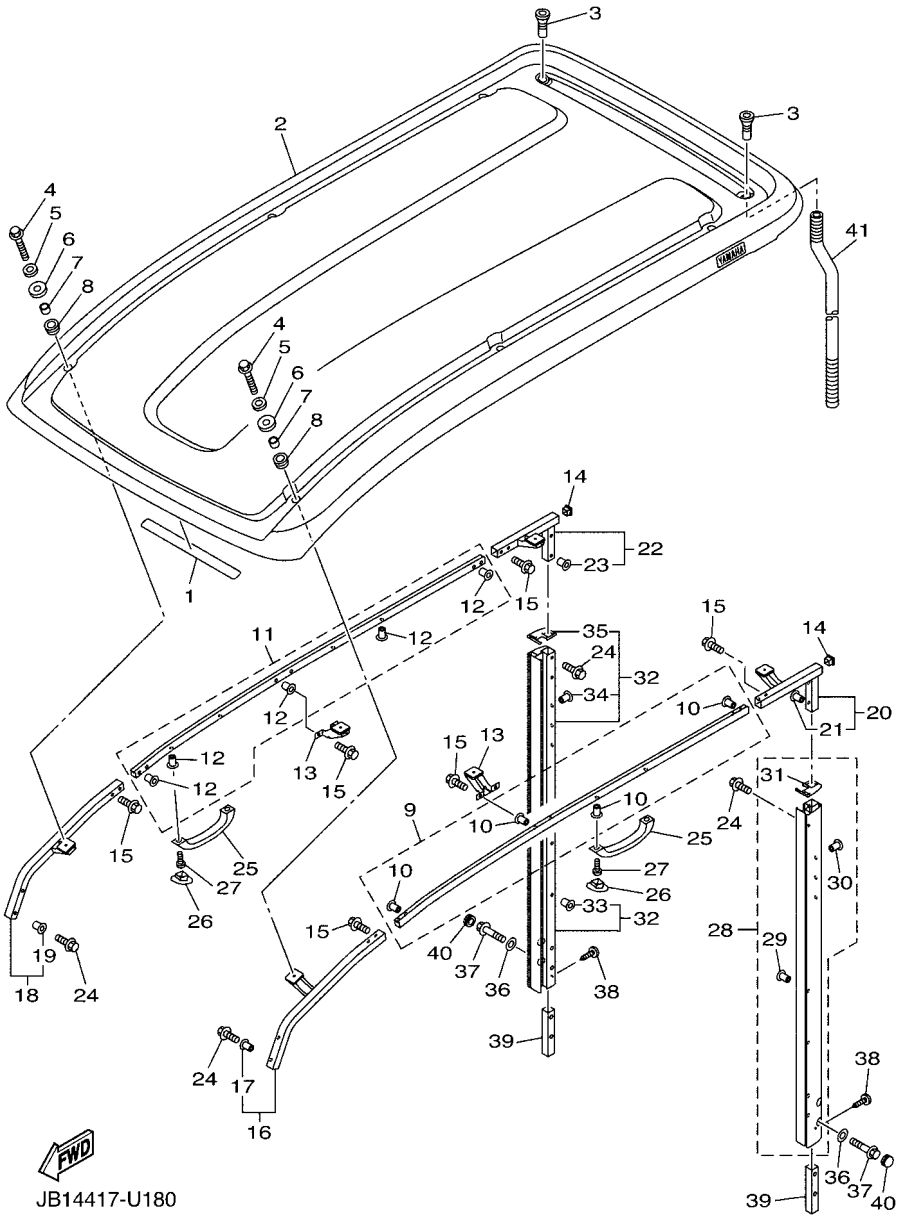

FIG. 31 SUN ROOF

REF. NO.	PART NO.	DESCRIPTION	JB64					REMARKS
1	JY5–78299–11	PLATE, CAUTION	1					
2	JB3–78314–00	COVER, SUN ROOF	1					
3	JX4–7832F–00	GROMMET, ROOF SUPPORT 1	2					
4	95880–06030	BOLT, FLANGE	6					
5	90201–06115	WASHER, PLATE	6					
6	90201–06116	WASHER, PLATE	6					
7	90387–15019	COLLAR	6					
8	90480–25004	GROMMET	6					
9	JB2–78392–00	MEMBER, ROOF FRAME	1					
10	90179–06636	.NUT	8					
11	JB2–78393–00	MEMBER, ROOF FRAME 2	1					
12	90179–06636	.NUT	10					
13	JB2–7833K–10	BRACKET, ROOF REAR	2					
14	JX7–7836H–00	CAP, BAG SUPPORT	2					
15	95880–06016	BOLT, FLANGE	12					
16	JB3–7830E–00	SUNROOF PIPE ASSY 1	1					
17	90179–06021	.NUT	2					
18	JB3–7830E–10	SUNROOF PIPE ASSY 1	1					
19	90179–06021	.NUT	2					
20	JB3–7830F–00	SUNROOF PIPE ASSY 2	1					
21	90179–06021	.NUT	2					
22	JB3–7830F–10	SUNROOF PIPE ASSY 2	1					
23	90179–06021	.NUT	2					
24	95880–06020	BOLT, FLANGE	8					
25	JF7–78214–00	GRIP, HAND	3					
26	J50–78274–10	COVER, HOLE 2	6					
27	90157–06068	SCREW, PAN HEAD	6					

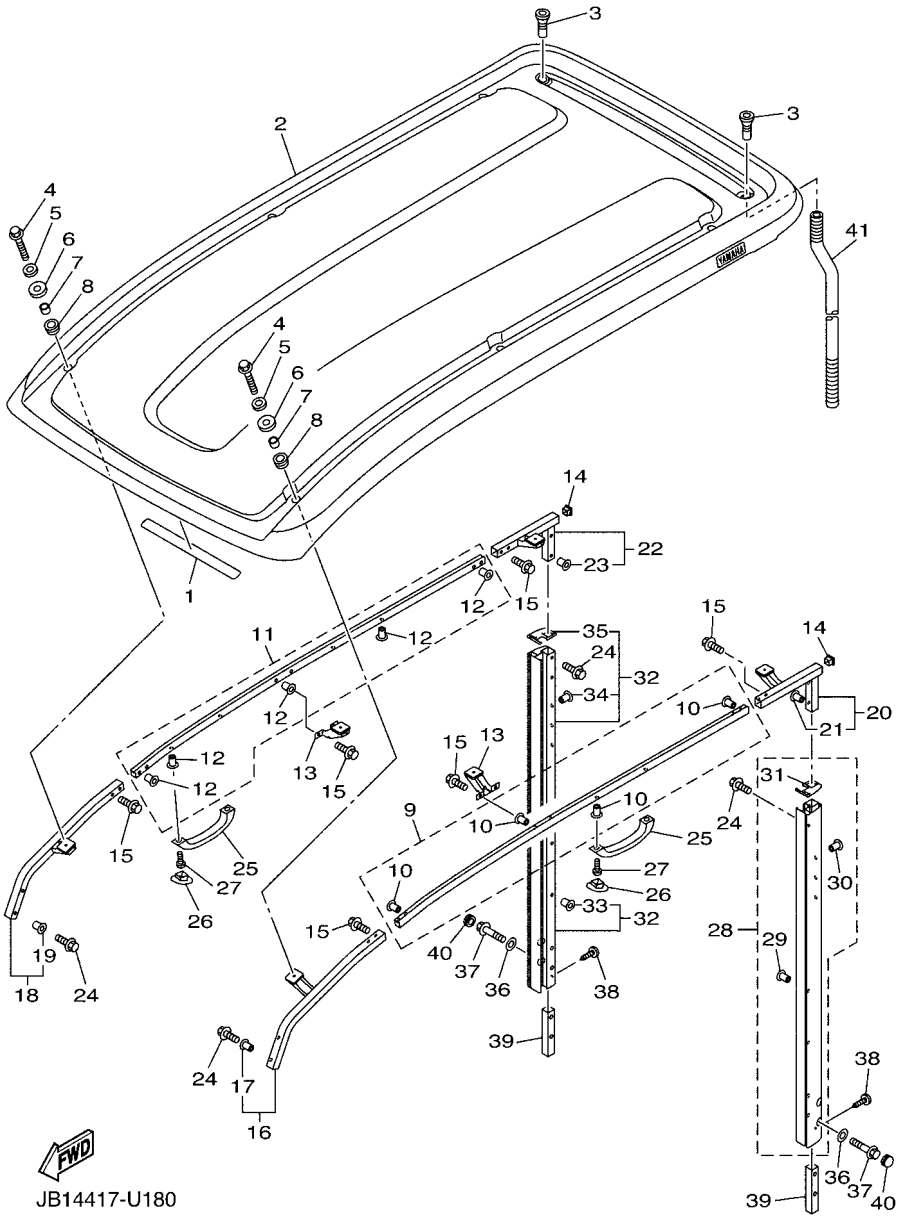

FIG. 31 SUN ROOF

REF. NO.	PART NO.	DESCRIPTION	JB64					REMARKS
28	JB2–7830C–00	ROOF SUPPORT ASSY 3	1					
29	90179–08689	.NUT	2					
30	90179–06059	.NUT	3					
31	JB2–7817F–00	.COVER, REAR PILLER (L.H)	1					
32	JB2–7830D–00	ROOF SUPPORT ASSY 4	1					
33	90179–08689	.NUT	2					
34	90179–06059	.NUT	3					
35	JB2–7817G–00	.COVER, REAR PILLER (R.H)	1					
36	90201–08730	WASHER, PLATE	4					
37	90105–08058	BOLT, FLANGE	4					
38	90269–06003	RIVET	2					
39	JB2–7831N–10	REINFORCEMENT, ROOF SUPPORT 3	2					
40	90338–24204	PLUG	2					
41	JX4–78334–01	HOSE	2					

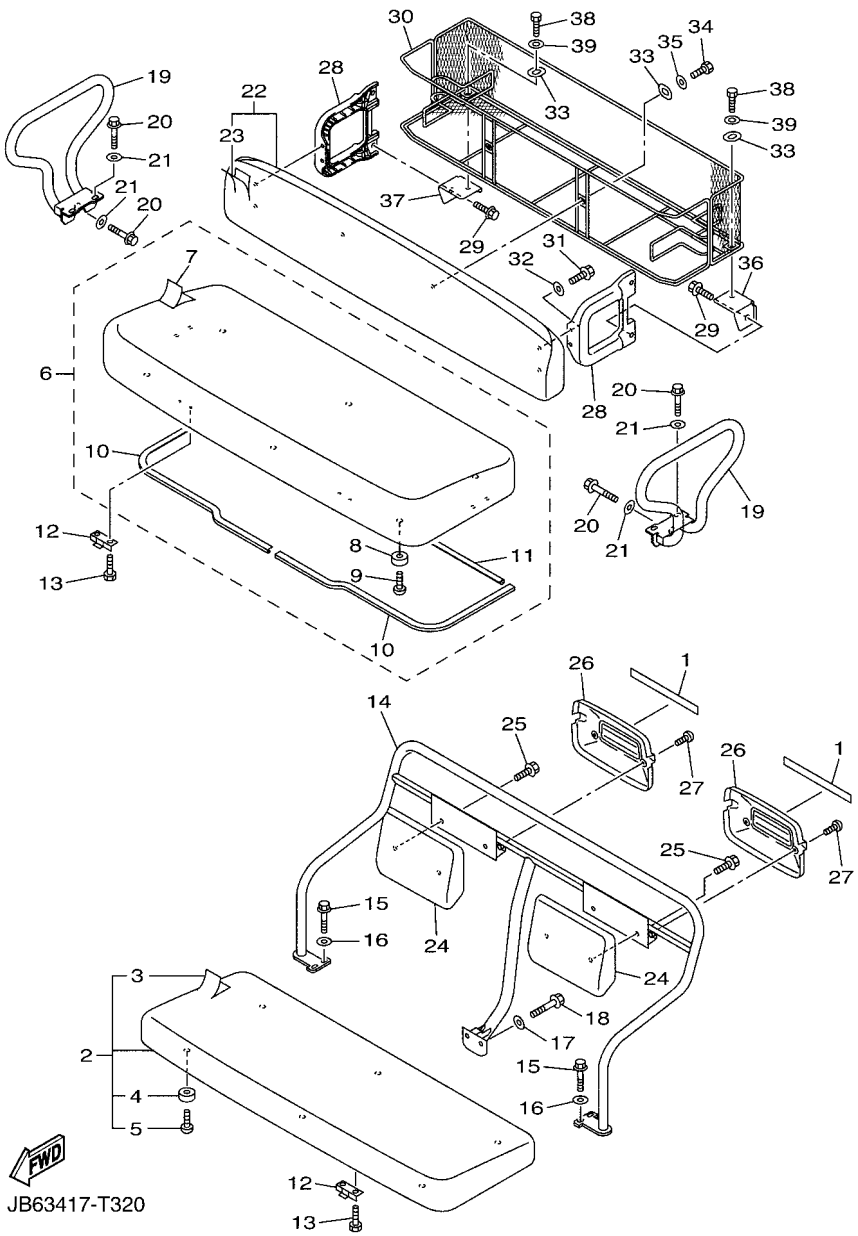

FIG. 32 SEAT

REF. NO.	PART NO.	DESCRIPTION	JB64					REMARKS
1	JX4–78297–01	PLATE, CAUTION 1	2					
2	JB6–78410–61	SEAT ASSY	1					
3	JB6–78405–60	.COVER, SEAT	1					
4	JF7–78433–00	.DAMPER, SEAT SUPPORT	6					
5	97702–50016	.SCREW, TAPPING	6					
6	JB6–78420–60	SEAT ASSY 2	1					
7	JB6–78404–50	.COVER,SEAT	1					
8	JF7–78433–00	.DAMPER, SEAT SUPPORT	6					
9	97702–50016	.SCREW, TAPPING	6					
10	JX4–78245–00	.SEAL 1	2					
11	JX4–78246–00	.SEAL 2	1					
12	JR7–78426–00	HINGE, SEAT 1	4					
13	97022–06025	BOLT, HEXAGON	8					
14	JY6–78423–10	SUPPORT, SEAT BACK	1					
15	90105–08096	BOLT, FLANGE	4					
16	90201–08730	WASHER, PLATE	4					
17	92902–08200	WASHER	2					
18	90105–08198	BOLT, FLANGE	2					
19	JB2–78361–50	ARM REST 1	2					
20	90105–08096	BOLT, FLANGE	6					
21	90201–08730	WASHER, PLATE	6					
22	JX4–78407–20	REAR SEAT SUB-ASSY, BACK	1					
23	JX4–78418–20	.COVER, SEAT	1					
24	JX4–78402–20	SEAT SUB ASSY, BACK	2					
25	95D02–06016	BOLT, FLANGE DEEP RECESS	4					
26	JB6–78413–00	COVER, SEAT BACK	2					
27	98980–06012	SCREW, BIND	4					

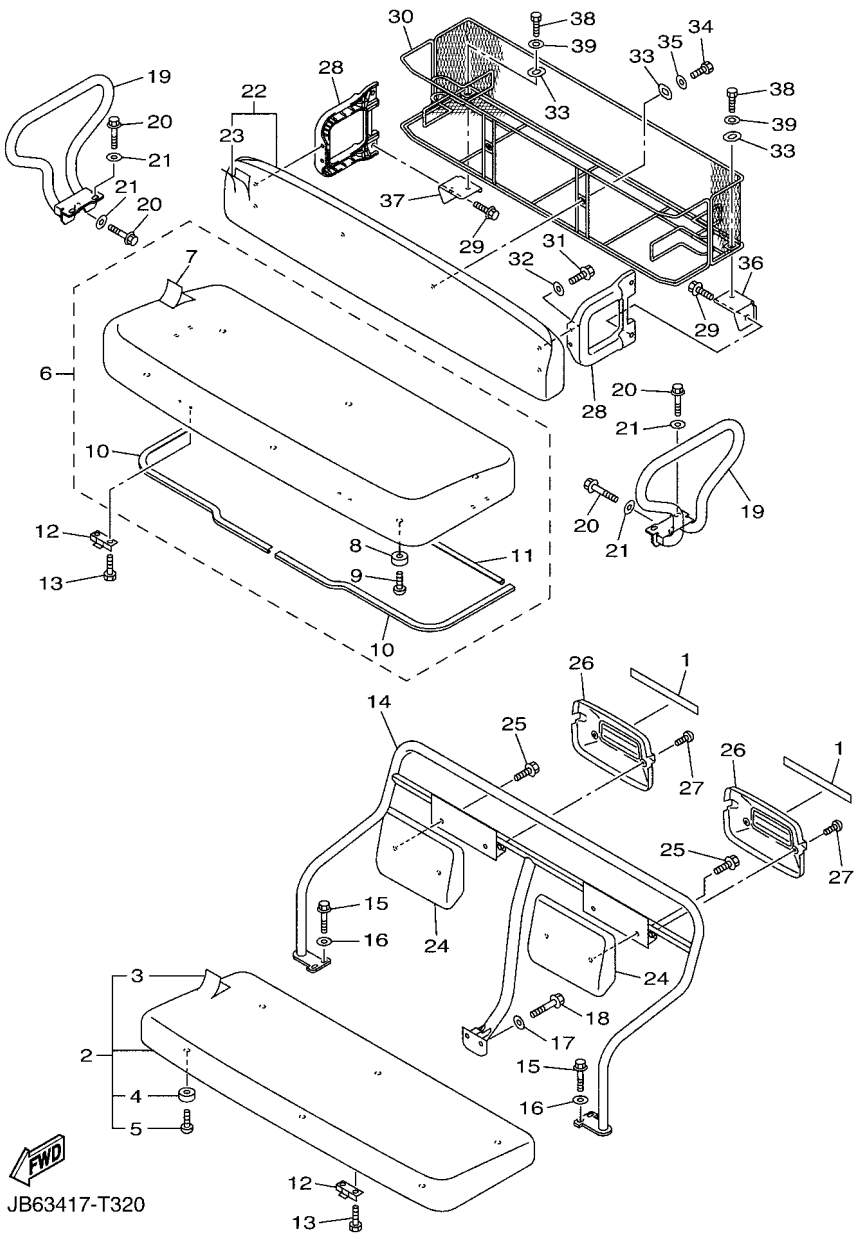

FIG. 32 SEAT

REF. NO.	PART NO.	DESCRIPTION	JB64					REMARKS
28	JY2–78484–00	SUPPORT, SEAT 1	2					
29	95880–08025	BOLT, FLANGE	4					
30	JY2–7810M–00	REAR STORAGE BOX COMP.	1					
31	95880–06020	BOLT, FLANGE	4					
32	90201–06020	WASHER, PLATE	4					
33	JY2–78478–00	WASHER, PLATE	4					
34	97080–06020	BOLT	2					
35	90201–06049	WASHER, PLATE	2					
36	JX4–7842F–00	SUPORT, SEAT (L.H)	1					
37	JX4–7842G–00	SUPORT, SEAT (R.H)	1					
38	97080–06016	BOLT	2					
39	90201–06049	WASHER, PLATE	2					

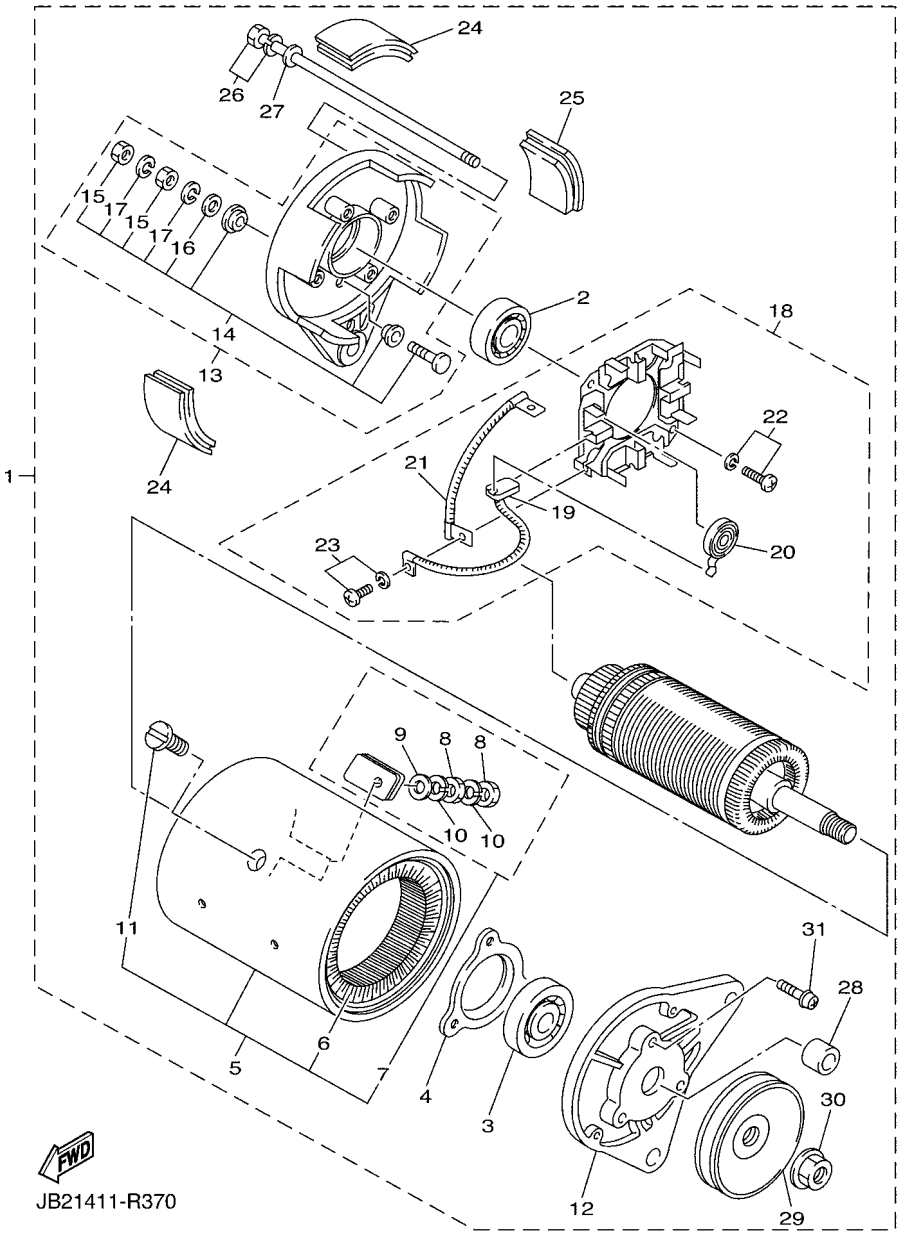

FIG. 33 STARTING MOTOR

REF. NO.	PART NO.	DESCRIPTION	JB64					REMARKS
1	JY2–81100–01	STARTER GENERATOR ASSY	1					
2	J10–H1157–10	.BEARING 1	1					
3	J10–H1158–10	.BEARING 2	1					
4	J10–81159–10	.HOLDER, BEARING	1					
5	JN6–H1110–10	.STATOR ASSY	1					
6	JN6–H1160–10	..FIELD COIL ASSY	1					
7	J10–81148–10	..SCREW SET 4	2					
8	9530N–06600	...NUT,HEX	2					
9	9290N–06600	...WASHER	1					
10	92907–06100	...WASHER, SPRING	2					
11	J10–81146–10	..SCREW 2	4					
12	JN6–H1165–00	.BRACKET, STARTER GENERATOR 1	1					
13	JB2–81166–00	.BRACKET, STARTER GENERATOR 2	1					
14	J10–81147–10	..SCREW SET 3	2					
15	9530N–06600	...NUT,HEX	2					
16	9290N–06600	...WASHER	1					
17	92907–06100	...WASHER, SPRING	2					
18	JB2–81119–00	.BRUSH HOLDER ASSY	1					
19	JB2–81111–00	..BRUSH	4					
20	JN6–H1113–00	..SPRING, BRUSH	4					
21	J10–81115–10	..WIRE, LEAD	2					
22	9850N–05016	..SCREW, PAN HEAD	2					
23	9850N–04010	..SCREW, PAN HEAD	4					
24	J10–81129–10	.COVER, BRUSH	3					
25	J10–81139–10	.COVER, BRUSH 2	1					
26	J10–H1145–10	.SCREW 1	2					
27	9290N–06600	.WASHER	2					

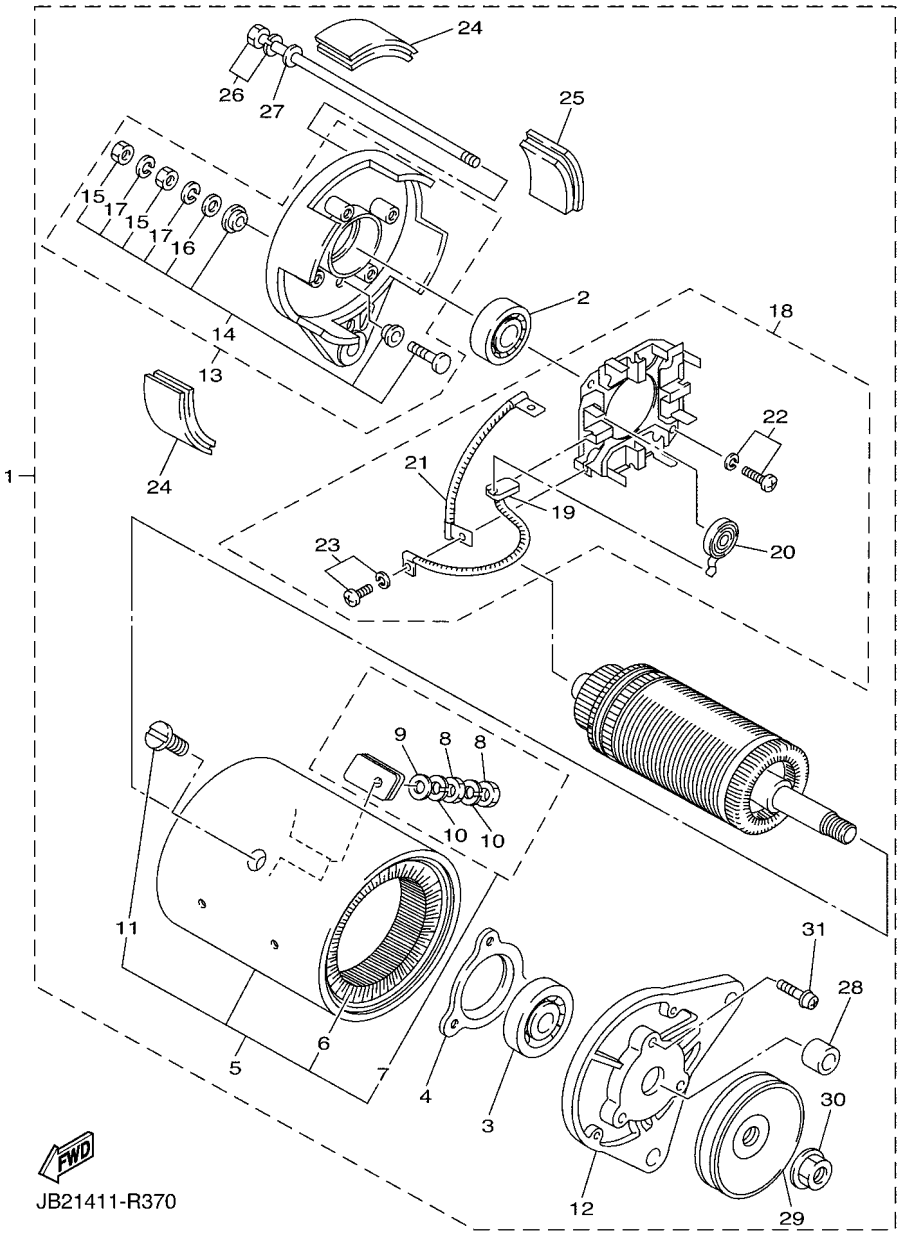

FIG. 33 STARTING MOTOR

REF. NO.	PART NO.	DESCRIPTION	JB64					REMARKS
28	JN3–H1661–00	.SPACER	1					
29	JN6–H1161–00	.PULLEY	1					
30	90179–16889	.NUT	1					
31	9850N–05018	.SCREW, PAN HEAD	3					

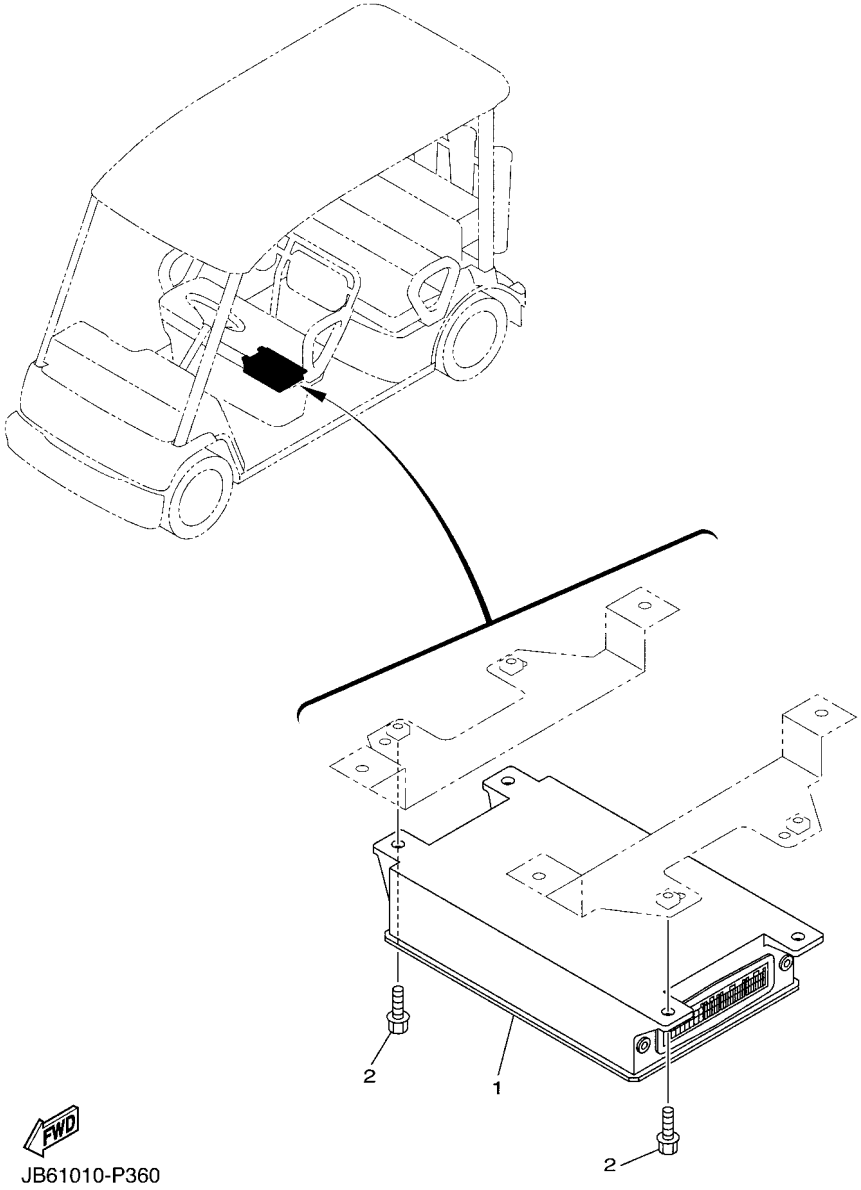

FIG. 34 CONTROL UNIT

REF. NO.	PART NO.	DESCRIPTION	JB64					REMARKS
1	JB6–8A210–30	CONTROL UNIT	1					
2	95822–06016	BOLT, FLANGE	4					

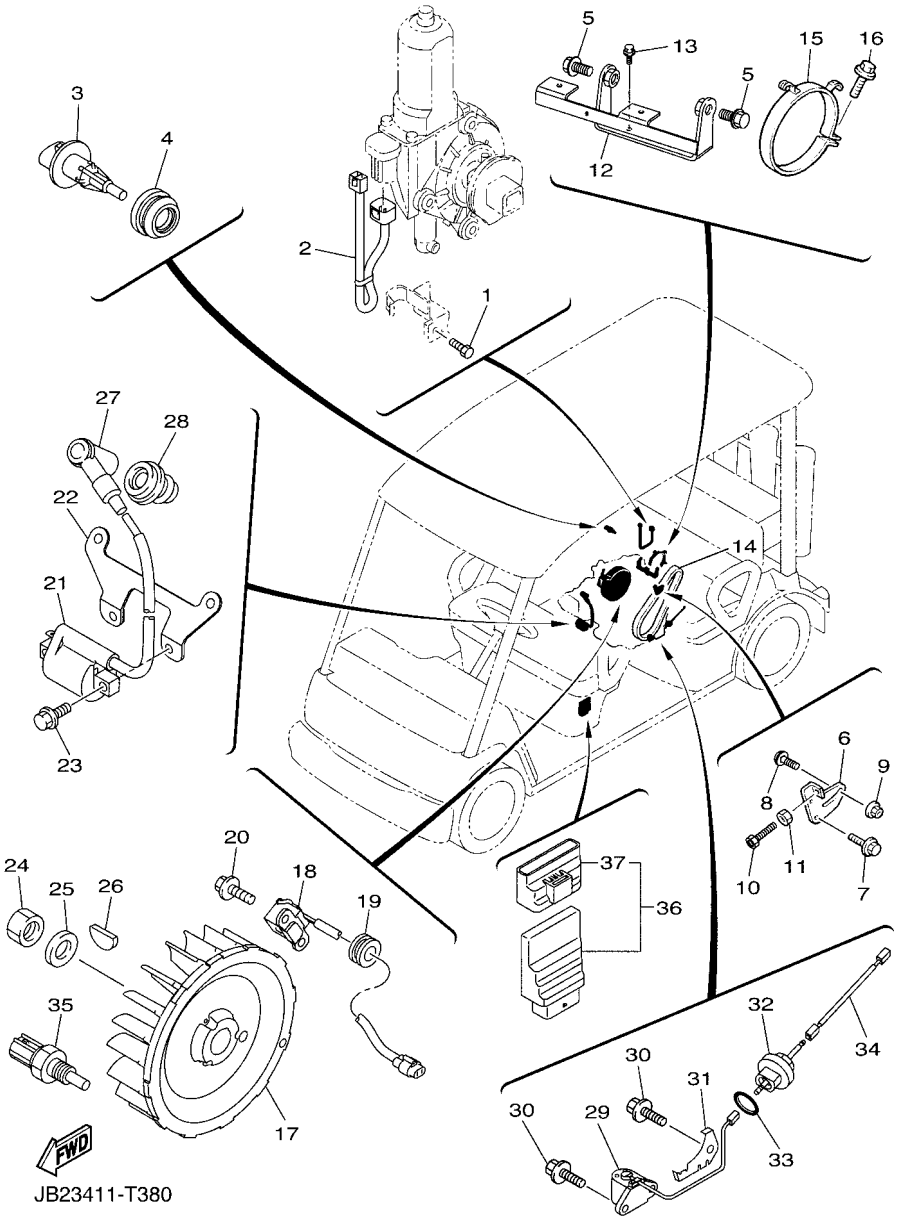

FIG. 35 ELECTRICAL 1

REF. NO.	PART NO.	DESCRIPTION	JB64					REMARKS
1	97002–05010	BOLT	1					
2	JB2–82318–00	WIRE, SUB-LEAD	1					
3	5CA–85886–00	SENSOR, AIR TEMPRATURE	1					
4	5CA–14435–00	GROMMET	1					
5	95822–12025	BOLT, FLANGE	2					
6	JN2–81170–00	TENSIONER ASSY	1					
7	95D32–08020	BOLT, FLANGE DEEP RECESS	2					
8	90109–083G2	BOLT	1					
9	95702–08500	NUT, FLANGE	1					
10	90101–06053	BOLT	1					
11	95302–06600	NUT, HEXAGON	1					
12	JB2–81171–00	BRACKET, STARTER GENERATOR	1					
13	95D32–08020	BOLT, FLANGE DEEP RECESS	2					
14	JN7–81173–00	BELT, STARTER	1					
15	JN7–81128–00	CLAMP	1					
16	95D32–06012	BOLT, FLANGE DEEP RECESS	1					
17	JC0–85650–10	ROTOR ASSY	1					
18	JB2–81670–00	PICK-UP ASSY	1					
19	90480–20564	GROMMET	1					
20	95822–06016	BOLT, FLANGE	2					
21	1S4–82310–00	IGNITION COIL ASSY	1					
22	JC0–82316–00	BRACKET, IGNITION COIL	1					
23	95822–06016	BOLT, FLANGE	2					
24	95302–18600	NUT, HEXAGON	1					
25	90201–18620	WASHER, PLATE	1					
26	90280–04052	KEY, WOODRUFF	1					
27	JN6–82370–00	PLUG CAP ASSY	1					

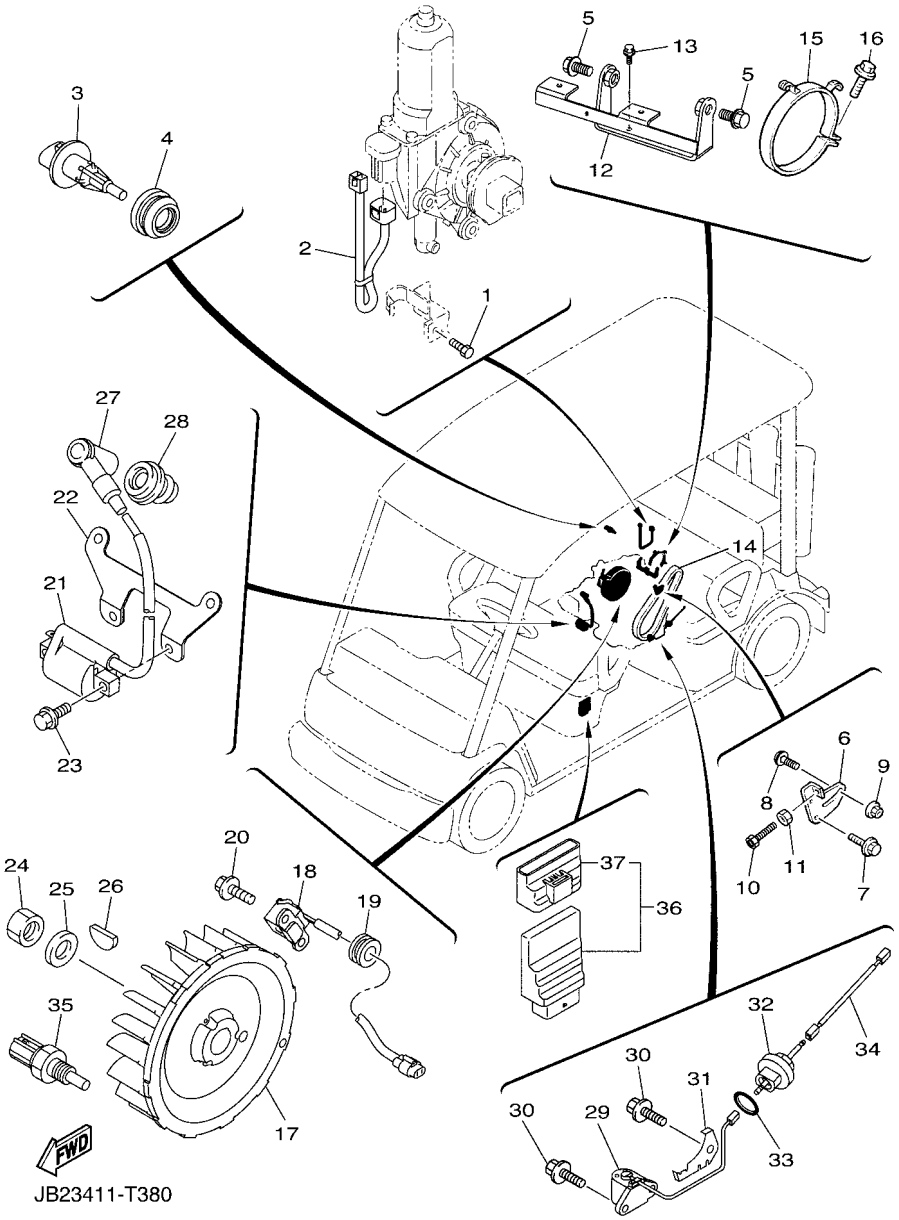

FIG. 35 ELECTRICAL 1

REF. NO.	PART NO.	DESCRIPTION	JB64					REMARKS
28	JE8–82372–00	SEAL, PLUG CAP	1					
29	JT0–85720–01	OIL LEVEL GAUGE ASSY	1					
30	95D32–06012	BOLT, FLANGE DEEP RECESS	3					
31	JT0–85724–00	CLAMP	1					
32	JT0–15362–00	PLUG, OIL LEVEL	1					
33	93210–15566	O-RING	1					
34	JT0–8231Y–00	WIRE, LEAD	1					
35	4P9–83591–00	THERMO UNIT	1					
36	JB2–85901–00	ENGINE CONTROL UNIT SUB-ASSY	1					
37	JB2–85546–00	.BAND	1					

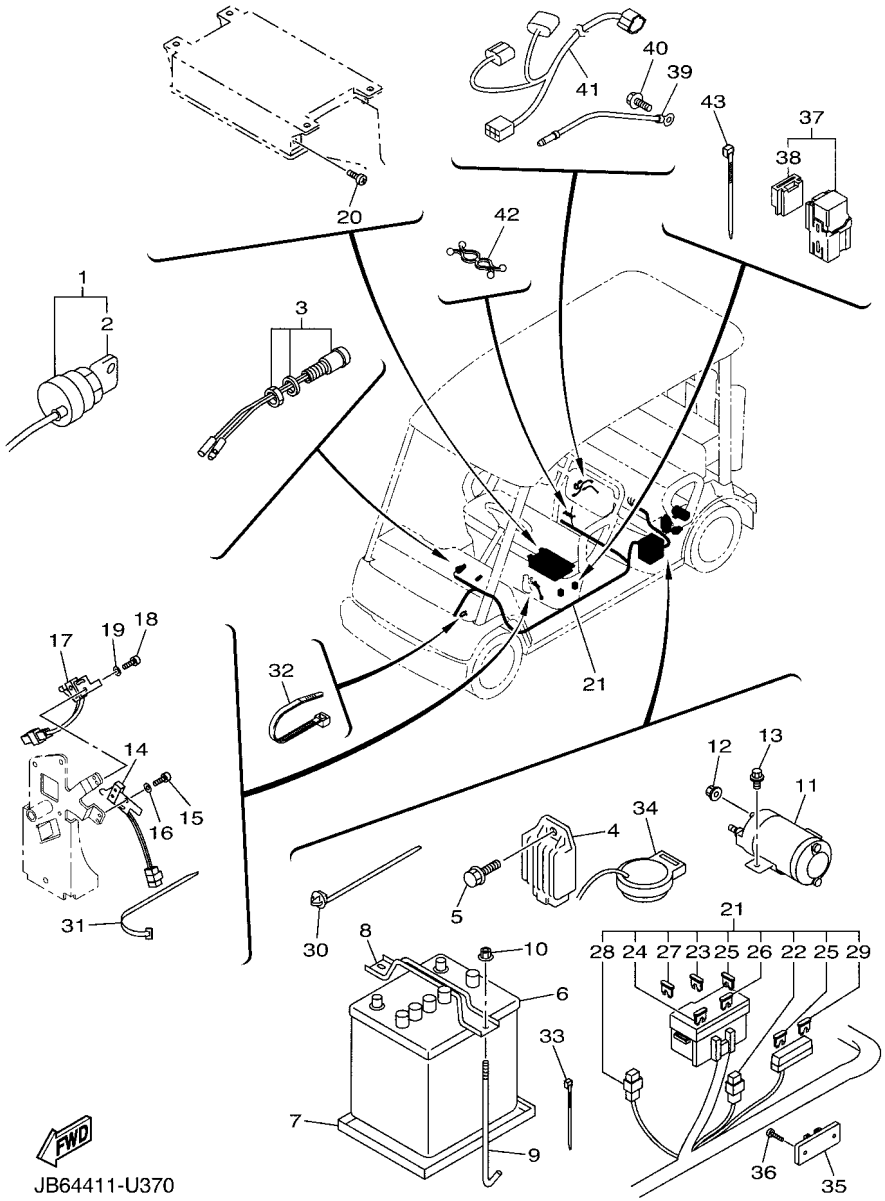

FIG. 36 ELECTRICAL 2

REF. NO.	PART NO.	DESCRIPTION	JB64					REMARKS
1	JX6–82510–00	MAIN SWITCH ASSY	1					
2	J44–82511–00	.KEY, MAIN SWITCH	1					
3	JB2–81977–10	BULB, PILOT LIGHT (RED)	1					
4	JN2–81910–21	VOLTAGE REGULATOR ASSY	1					
5	90153–06034	SCREW, HEXAGON	1					
6	*	BATTERY ASSY(12V-52AH)	1					LM
7	JN5–82122–00	SEAT, BATTERY	1					
8	JN5–82136–00	PLATE, BATTERY FITTING	1					
9	J45–82133–00	SCREW, FITTING	2					
10	90185–06153	NUT, SELF-LOCKING	2					
11	JH2–81950–02	RELAY ASSY	1					
12	95702–08500	NUT, FLANGE	2					
13	95D02–06012	BOLT, FLANGE DEEP RECESS	2					
14	JT0–82400–00	SWITCH ASSY	1					
15	98502–04010	SCREW, PAN HEAD	2					
16	92902–04600	WASHER, PLATE	2					
17	JT1–82400–20	SWITCH ASSY	1					
18	98502–04010	SCREW, PAN HEAD	2					
19	92902–04600	WASHER, PLATE	2					
20	97702–50516	SCREW, TAPPING	2					
21	JB6–82590–11	WIRE HARNESS ASSY	1					
22	JN2–81980–01	.DIODE ASSY	1					
23	5JJ–82151–10	.FUSE (15A-BL)	2					
24	5JJ–82151–20	.FUSE (20A-BL)	2					
25	5JJ–82151–40	.FUSE (4A-BL)	2					
26	5JJ–82151–00	.FUSE (7.5A-BL)	2					
27	5JJ–82151–30	.FUSE (10A-BL)	1					

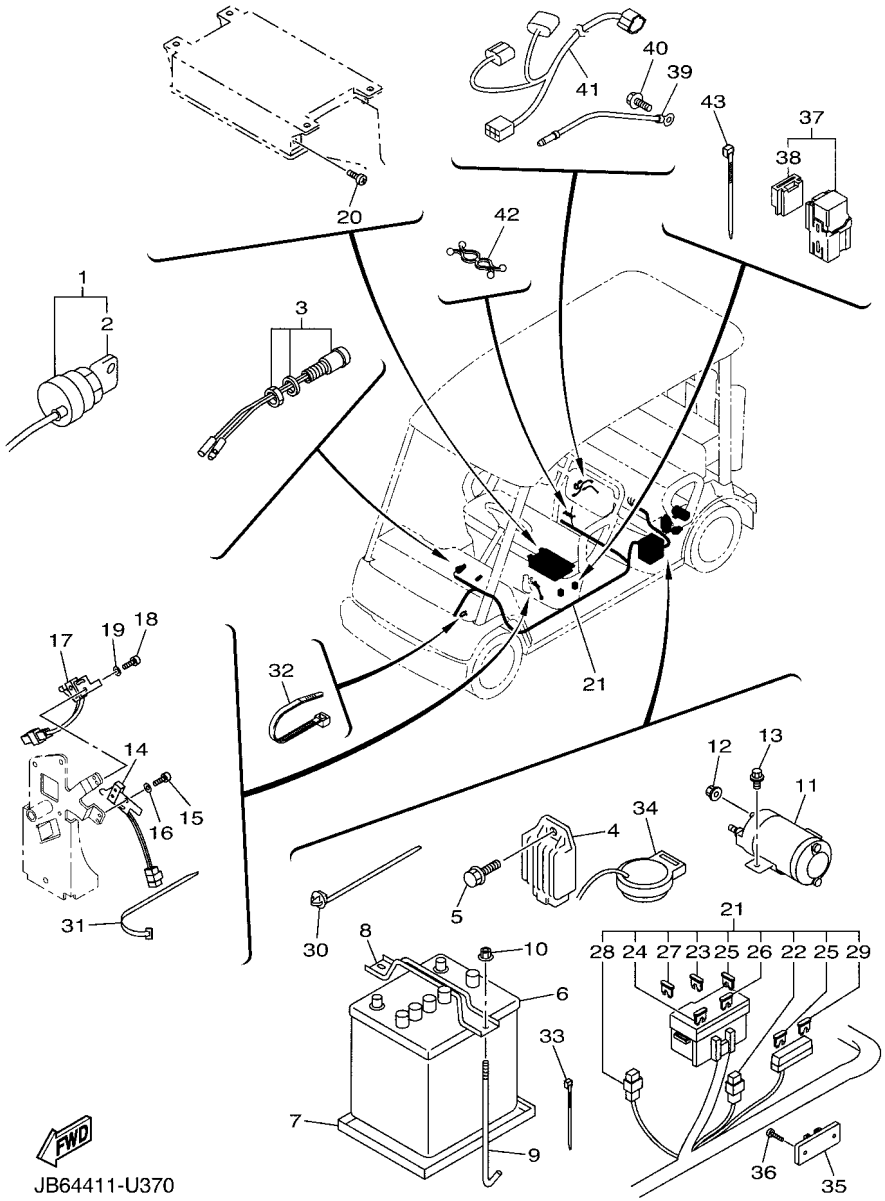

FIG. 36 ELECTRICAL 2

REF. NO.	PART NO.	DESCRIPTION	JB64					REMARKS
28	4FM–82151–00	.FUSE (30A)	1					
29	5JJ–82151–80	.FUSE (2A-BL)	1					
30	90464–36007	CLAMP	1					
31	90465–13152	CLAMP	4					
32	90465–13275	CLAMP	2					
33	90465–12356	CLAMP	1					
34	JN3–83383–10	BUZZER	1					
35	JT1–83614–00	BRACKET	1					
36	98902–06014	SCREW, BIND	2					
37	1TP–81950–00	RELAY ASSY (1TP-00)	2					
38	5EA–81952–00	.HOLDER, RELAY	1					
39	JC0–82519–00	WIRE, EARTH LEAD	1					
40	95D32–06012	BOLT, FLANGE DEEP RECESS	1					
41	J0B–82149–01	WIRE, LEAD 3	1					
42	90464–14134	CLAMP	1					
43	90465–12356	CLAMP	1					

PART NO.	REF. NO.
JT0–11111–00	1 – 1
JN6–11116–00	1 – 10
JN6–11133–10	1 – 2
JR7–11163–10	1 – 18
JB2–11166–01	1 – 16
JN6–11168–00	1 – 11
JN6–11169–00	1 – 12
JT0–11181–00	1 – 3
JN6–11191–01	1 – 9
JN6–11193–00	1 – 13
812–11198–00	8 – 6
JN6–11400–00	2 – 1
JN6–11454–10	2 – 8
JR7–11610–00	2 – 3
JR7–11610–10	2 – 3
JR7–11610–20	2 – 3
JR7–11631–00–A0	2 – 2
583–11633–00	2 – 4
JR7–11635–00	2 – 2
JR7–11636–00	2 – 2
JN6–11650–10	2 – 6
JN6–11654–10	2 – 7
JN6–12111–10	3 – 2
J38–12117–01	3 – 6
J38–12118–00	3 – 7
4G0–12119–00	3 – 13
7RH–12121–10	3 – 3
JN6–12151–00	3 – 8
JN6–12153–10	3 – 4
JR7–12154–10	3 – 12
J38–12156–20	3 – 11
22F–12159–10	3 – 9
JR7–12180–10	3 – 1
JN6–12616–00	4 – 3
JN6–12621–02	4 – 1
JR7–12634–00	4 – 11
JN6–12651–01	4 – 5
JN6–12652–00	4 – 7
JR7–12658–00	4 – 6
JX4–12691–00	4 – 9
JC0–13542–00	6 – 4
JC0–13567–00	5 – 4
JN6–13567–00	5 – 3
JC0–13595–00	5 – 1
JB2–13750–00	6 – 1
JB2–13769–00	6 – 12
J0B–13770–00	6 – 6
J0B–13907–01	13 – 3
52S–13938–00	6 – 7
JB2–13971–00	13 – 10
52B–14137–00	6 – 8
52B–14147–00	6 – 9
5CA–14147–00	6 – 10
3B4–14424–00	5 – 9
5CA–14435–00	35 – 4
JB2–14453–00	5 – 19
7KY–14613–01	7 – 6
JB2–14710–20	7 – 1
JY2–14718–00	7 – 2
JY2–14728–00	7 – 3
JB2–14771–00	7 – 9
JC0–15111–01	8 – 1
J38–15361–00	8 – 18
JT0–15362–00	35 – 32
796–15363–01	8 – 16
JN6–15411–01	8 – 8
JY2–15451–00	8 – 12
JY2–17688–00	21 – 6
JY2–2135J–00	20 – 6
	21 – 3
JT0–21481–00	9 – 1
JB2–22110–10	9 – 4
JX4–22123–00	9 – 13
JX4–22124–00	9 – 6
JB2–22130–20	9 – 17
JB2–22172–00	9 – 5
JY4–22210–00	9 – 10
JB2–22348–00	9 – 20
5GJ–22426–00	10 – 16
JB6–22501–29	10 – 1
JY6–22504–00	10 – 2
JB2–2254R–00	29 – 19
JX4–22562–01	10 – 14
JB2–22571–00	10 – 4
JB2–22572–11	10 – 5
JB2–22594–00	10 – 18
JX4–22597–00	10 – 7
JX6–2259M–00	10 – 12
JX6–2259N–00	10 – 11
JY4–23350–00	11 – 18
JX4–23400–01	12 – 9
JX4–23417–00	12 – 27
JX4–23427–00	12 – 30
	12 – 36
JX4–23445–00	12 – 26
JX2–23510–00	11 – 21
JX2–23520–00	11 – 22
2HR–23526–00	11 – 2
	11 – 11
JB2–23540–00	11 – 1
JX4–23549–01	11 – 3
JY8–23570–01	11 – 10
JX4–23579–01	11 – 12
JY6–23810–00	12 – 1
JX4–23812–00	12 – 12
JR9–23823–01	12 – 28
JR7–23833–00	12 – 24
JX4–23837–00	12 – 20
JN5–23838–00	12 – 3
JX4–23841–00	12 – 25
JR7–23844–00	12 – 18
JR7–23848–00	12 – 19
JY2–2384L–01	5 – 18
JX4–2384N–00	12 – 11
J50–23857–00	12 – 2
JR7–23866–00	12 – 22
JB6–2386N–01	12 – 8
JX4–23876–00	12 – 29
	12 – 35
JX4–2387A–01	12 – 10
JX4–2387E–00	12 – 13
JR7–2387F–00	12 – 16
JR7–2387G–00	12 – 14
JR7–2387J–00	12 – 17
JR7–2387K–00	12 – 15
JR7–23894–00	12 – 23
JB2–24110–01	13 – 1
JX4–24141–00	13 – 18
8AC–2414B–01	28 – 11
JB2–24217–00	13 – 9
JX4–24260–03	13 – 7
4J2–24261–00	13 – 8
1S3–24486–00	13 – 5
18P–24491–00	13 – 4
JH2–24610–10	13 – 2
JR7–2467K–00	12 – 21
JB2–25100–00	11 – 24
	25 – 14
JB2–2510S–00	11 – 27
	25 – 17
JY2–25110–00	11 – 28
JY8–2512A–01	11 – 36
	25 – 21
JY8–25180–00	11 – 25
JY8–25180–00	25 – 15
JB2–25310–00	25 – 18
JX2–2580T–02	15 – 3
	16 – 3
JX2–2580U–02	15 – 17
	16 – 17
JB2–25816–00	18 – 19
JB2–2581J–00	18 – 4
1UY–25824–51	15 – 9
	15 – 23
	16 – 9
	16 – 23
1UY–25825–51	15 – 16
	15 – 30
	16 – 16
	16 – 30
JB2–25826–00	18 – 21
JX2–2582A–00	18 – 35
JX2–2582T–00	15 – 1
	16 – 1
JB2–2583T–00	18 – 16
JB2–25852–00	18 – 20
2GU–25866–00	18 – 15
JB2–25871–00	18 – 7
JB2–25872–00	18 – 1
JB2–25873–00	18 – 2
JB2–25874–00	18 – 3
5KM–25875–00	18 – 37
JB2–25876–00	18 – 39
JX2–2587A–00	18 – 43
JB2–25880–00	18 – 22
JX2–25882–10	18 – 8
JB2–25883–00	18 – 9
JX2–25885–11	18 – 34
JX2–25887–00	18 – 42
JB2–2588A–00	18 – 10
JB2–2588B–00	18 – 11
JX2–2588C–10	18 – 12
JY2–2588D–00	18 – 13
JB2–2588E–00	18 – 14
JB2–2588H–00	18 – 5
JB2–2588J–00	18 – 6
JB2–25896–00	18 – 18
3JD–25917–00	15 – 7
	15 – 21
	16 – 7
	16 – 21
JX2–25919–00	15 – 8
JX2–25919–00	15 – 22
	16 – 8
	16 – 22
3JD–25926–00	15 – 12
	15 – 26
	16 – 12
	16 – 26
1UY–25926–51	15 – 10
	15 – 24
	16 – 10
	16 – 24
3TB–25933–00	15 – 15
	15 – 29
	16 – 15
	16 – 29
1UY–25937–51	15 – 6
	15 – 20
	16 – 6
	16 – 20
1UY–25938–51	15 – 11
	15 – 25
	16 – 11
	16 – 25
JX2–25961–00	15 – 13
	15 – 27
	16 – 13
	16 – 27
JB2–26312–00	5 – 11
JB2–26313–00	5 – 12
JB2–26326–00	18 – 17
JB2–27200–00	14 – 1
JB2–27211–00	14 – 3
JB2–27218–00	18 – 23
JB2–27222–00	18 – 24
JB2–27229–00	18 – 26
JB2–27263–00	14 – 15
JB2–27275–00	17 – 2
JB2–27411–00	28 – 17
JY2–27801–01	19 – 1
JY2–44189–00	20 – 5
JY2–45282–00	20 – 15
JY2–45531–00	21 – 8
JY2–45618–00	20 – 12
JY2–45621–00	20 – 13
JY2–45677–00	21 – 11
JY2–46159–00	21 – 7
JY2–46205–24	20 – 8
JY2–46210–01	20 – 1
JY2–46220–23	20 – 2
JY2–46231–22	20 – 14
JY2–46236–20	20 – 9
JY2–46237–20	20 – 10
JX4–46241–00	20 – 18
JY2–46249–00	20 – 16
JY2–4624A–00	20 – 3
JY2–4624B–00	21 – 4
JY2–46251–21	20 – 7
JY2–46253–00	20 – 4
JB2–46260–11	21 – 1
JY2–46270–21	21 – 2
JY2–46275–00	21 – 10
JB2–46284–00	21 – 5
JX4–46311–11	22 – 1
JB2–46312–00	22 – 7
JX4–46319–00	22 – 12
JB2–46321–00	22 – 19
J38–46338–00	22 – 32
JX4–4633A–00	22 – 31
JX2–4633H–00	23 – 5
J38–46348–00	22 – 28
J38–46351–00	22 – 20
J38–46356–00	22 – 29
JB2–46361–20	22 – 21
JB2–46362–00	22 – 22
J38–46363–00	22 – 23
JY2–4636A–00	22 – 24
JX4–46372–01	24 – 7
JY2–46374–00	21 – 9
JR7–46381–00	24 – 10
JR7–46382–00	24 – 4
J38–46383–00	24 – 2
JX4–46384–00	22 – 38
JB2–46411–00	22 – 44
JB2–46414–00	22 – 46
JB2–46415–00	22 – 47
JB2–46417–00	22 – 48
JB2–46421–10	22 – 45
JY2–46511–00	25 – 9
JY2–46512–00	25 – 10
JX2–46540–00	25 – 1
JX2–46550–00	25 – 5
JY2–47339–00	20 – 17
JN3–47559–00	22 – 58
JT4–48214–00	23 – 11
JX4–48330–02	24 – 1
JX4–77157–00	28 – 14

PART NO.	REF. NO.
JY3–77174–00	26 – 13
JB6–7717F–50	28 – 28
JX4–77188–00	28 – 13
JB2–77201–02	26 – 1
JB2–77202–02	26 – 15
JY2–77212–10	26 – 10
JB2–77213–00	26 – 2
JB2–77214–00	26 – 3
JX4–77217–00	26 – 6
JY3–77223–00	26 – 8
JB2–77233–01	26 – 14
JB2–77261–00	26 – 4
JB2–77262–00	26 – 5
JY3–77263–01	26 – 12
JB2–77271–00	26 – 18
JB2–77275–00	26 – 19
JB2–77283–00	26 – 17
JB2–77510–00	27 – 1
JX4–77520–00	27 – 6
JF7–77563–00	27 – 12
JB2–77711–00	28 – 19
JB6–77741–10	28 – 20
JN5–77741–11	29 – 8
JB6–77742–00	28 – 24
JY6–77762–10	12 – 38
JB3–77766–50	29 – 9
JY4–77768–10	26 – 16
JB2–78100–30	28 – 1
JX4–78101–00	28 – 10
JX4–78101–10	28 – 10
JX4–78101–20	28 – 10
JX4–78101–30	28 – 10
JX4–78101–60	28 – 10
JY2–7810M–00	32 – 30
JY2–78113–00	28 – 15
JY2–78117–00	29 – 2
JY2–78118–00	29 – 3
JB6–7811V–00	28 – 26
JB2–78130–00	29 – 11
JB2–78130–10	29 – 11
JB2–78130–20	29 – 11
JB2–78130–30	29 – 11
JB2–78130–60	29 – 11
JB2–78139–00	28 – 25
JB2–7813F–00	26 – 26
JB2–7813G–00	26 – 28
JB2–78140–00	29 – 12
JB2–78140–10	29 – 12

PART NO.	REF. NO.
JB2–78140–20	29 – 12
JB2–78140–30	29 – 12
JB2–78140–60	29 – 12
JB2–78141–00	29 – 4
JY2–78142–00	29 – 10
JX4–7814E–00	29 – 21
JX4–7814H–00	28 – 7
JB2–78150–00	29 – 20
JX4–78164–00	27 – 2
JX4–78165–00	27 – 3
JB2–7817F–00	31 – 31
JB2–7817G–00	31 – 35
JB2–78180–00	27 – 8
JX2–78181–00	28 – 22
JB6–78182–50	28 – 27
JB2–78187–00	30 – 1
JX4–7818E–00	27 – 9
JX4–7818F–00	27 – 10
JB2–78191–00	30 – 4
JB2–78192–00	30 – 5
JB2–781B1–00	29 – 13
JF7–78214–00	31 – 25
JB2–78231–00	29 – 24
JB2–78241–00	29 – 26
JB2–78243–00	28 – 2
JB2–78244–00	28 – 3
JX4–78245–00	32 – 10
JX4–78246–00	32 – 11
JY2–78251–00	29 – 16
JB2–78252–00	9 – 21
JB2–78253–00	10 – 19
JX4–7825K–00	30 – 8
JX4–78273–00	28 – 29
J50–78274–10	31 – 26
JX4–78297–01	32 – 1
JB2–78298–20	28 – 5
JY5–78299–11	31 – 1
JY2–7829A–20	26 – 29
JB2–7830A–00	26 – 25
JB2–7830B–00	26 – 27
JB2–7830C–00	31 – 28
JB2–7830D–00	31 – 32
JB3–7830E–00	31 – 16
JB3–7830E–10	31 – 18
JB3–7830F–00	31 – 20
JB3–7830F–10	31 – 22
JB3–78314–00	31 – 2
JX4–7831L–00	26 – 31

PART NO.	REF. NO.
JB2–7831N–10	31 – 39
JY2–78328–20	28 – 8
JX4–7832F–00	31 – 3
JX4–7832H–00	29 – 14
JX4–78334–01	31 – 41
JX4–7833H–00	29 – 15
JB2–7833K–10	31 – 13
JN5–78357–10	12 – 37
JX4–78358–00	12 – 39
JX4–7835E–00	28 – 9
JB2–78361–50	32 – 19
JX7–7836H–00	31 – 14
JB2–78392–00	31 – 9
JB2–78393–00	31 – 11
JX4–78402–20	32 – 24
JB6–78404–50	32 – 7
JB6–78405–60	32 – 3
JX4–78407–20	32 – 22
JB6–78410–61	32 – 2
JB6–78413–00	32 – 26
JX4–78418–20	32 – 23
JB6–78420–60	32 – 6
JY6–78423–10	32 – 14
JR7–78426–00	32 – 12
JX4–78427–00	29 – 17
JY2–78427–00	29 – 5
JX4–7842F–00	32 – 36
JX4–7842G–00	32 – 37
JF7–78433–00	32 – 4
	32 – 8
JY2–78460–00	10 – 9
JY2–78478–00	32 – 33
JY2–78484–00	32 – 28
JY2–81100–01	33 – 1
JB2–81111–00	33 – 19
J10–81115–10	33 – 21
JB2–81119–00	33 – 18
JN7–81128–00	35 – 15
J10–81129–10	33 – 24
J10–81139–10	33 – 25
J10–81146–10	33 – 11
J10–81147–10	33 – 14
J10–81148–10	33 – 7
J10–81159–10	33 – 4
JB2–81166–00	33 – 13
JN2–81170–00	35 – 6
JB2–81171–00	35 – 12
JN7–81173–00	35 – 14

PART NO.	REF. NO.
JB2–81670–00	35 – 18
5GM–81677–00	18 – 32
JY2–81802–00	5 – 16
JN2–81910–21	36 – 4
1TP–81950–00	36 – 37
JH2–81950–02	36 – 11
5EA–81952–00	36 – 38
JB2–81977–10	36 – 3
JN2–81980–01	36 – 22
JN5–82122–00	36 – 7
J45–82133–00	36 – 9
JN5–82136–00	36 – 8
J0B–82149–01	36 – 41
4FM–82151–00	36 – 28
5JJ–82151–00	36 – 26
5JJ–82151–10	36 – 23
5JJ–82151–20	36 – 24
5JJ–82151–30	36 – 27
5JJ–82151–40	36 – 25
5JJ–82151–80	36 – 29
1S4–82310–00	35 – 21
JC0–82316–00	35 – 22
JB2–82318–00	35 – 2
JT0–8231Y–00	35 – 34
JX2–8234W–01	23 – 4
JN6–82370–00	35 – 27
JE8–82372–00	35 – 28
1C7–82380–00	6 – 3
JT0–82400–00	36 – 14
JT1–82400–20	36 – 17
JX6–82510–00	36 – 1
J44–82511–00	36 – 2
JC0–82519–00	36 – 39
JB2–82530–00	14 – 13
JB6–82590–11	36 – 21
JF7–82817–22	19 – 4
JN3–83383–10	36 – 34
4P9–83591–00	35 – 35
JT1–83614–00	36 – 35
JX2–83688–00	23 – 10
JB2–85546–00	35 – 37
JC0–85650–10	35 – 17
JT0–85720–01	35 – 29
JT0–85724–00	35 – 31
JB2–85885–00	6 – 2
JN9–85885–00	19 – 2
5CA–85886–00	35 – 3
JB2–85901–00	35 – 36

PART NO.	REF. NO.
JB2–85930–09	17 – 1
JB2–86281–00	22 – 53
JX2–86290–00	23 – 1
JB6–8A210–30	34 – 1
J0B–E4411–01	5 – 8
J0B–E4412–00	5 – 5
J0B–E4451–01	5 – 6
JU0–E445E–00	5 – 7
JN6–H1110–10	33 – 5
JN6–H1113–00	33 – 20
J10–H1145–10	33 – 26
J10–H1157–10	33 – 2
J10–H1158–10	33 – 3
JN6–H1160–10	33 – 6
JN6–H1161–00	33 – 29
JN6–H1165–00	33 – 12
JN3–H1661–00	33 – 28
JX2–W0045–11	15 – 14
	16 – 14
JX2–W0045–21	15 – 28
	16 – 28
3GD–W0047–00	15 – 5
	15 – 19
	16 – 5
	16 – 19
3TB–W0057–00	15 – 4
	15 – 18
	16 – 4
	16 – 18
90101–06053	35 – 10
90101–08344	22 – 34
90101–10038	25 – 12
90105–05331	19 – 3
90105–06452	23 – 9
90105–08002	21 – 13
90105–08058	31 – 37
90105–08096	32 – 15
	32 – 20
90105–08198	32 – 18
90105–10116	11 – 8
90105–10221	11 – 16
90105–10283	12 – 31
90105–102A9	15 – 31
	16 – 31
90105–10348	22 – 49
90105–10728	11 – 5
90105–12031	9 – 14
90109–06212	29 – 1

PART NO.	REF. NO.
90109–06302	18 – 44
90109–08221	15 – 2
	16 – 2
90109–083G2	35 – 8
90110–05032	23 – 6
90110–06091	22 – 55
90111–08027	27 – 11
90113–04004	20 – 11
90114–10019	11 – 31
	25 – 19
90119–06073	13 – 14
	13 – 17
90153–05064	5 – 17
90153–06034	36 – 5
90157–06068	31 – 27
90170–05302	3 – 10
90170–08209	7 – 7
90171–12001	11 – 14
	12 – 33
90179–06020	26 – 22
90179–06021	31 – 17
	31 – 19
	31 – 21
	31 – 23
90179–06059	31 – 30
	31 – 34
90179–06636	31 – 10
	31 – 12
90179–08491	22 – 60
90179–08689	31 – 29
	31 – 33
90179–10031	11 – 32
	25 – 20
90179–16889	33 – 30
90179–20016	25 – 11
90185–06153	36 – 10
90185–10019	14 – 10
90185–10060	9 – 3
90185–12009	9 – 8
90201–044H9	12 – 41
90201–06020	26 – 21
	32 – 32
90201–06049	32 – 35
	32 – 39
90201–06074	9 – 19
90201–06090	13 – 11
90201–06115	31 – 5
90201–06116	31 – 6

PART NO.	REF. NO.
90201–08088	18 – 27
90201–08326	24 – 13
90201–08730	31 – 36
	32 – 16
	32 – 21
90201–10057	1 – 5
	8 – 15
90201–10118	18 – 31
90201–105A2	12 – 32
90201–107G8	9 – 2
90201–12166	22 – 42
90201–12190	12 – 5
90201–121J0	9 – 9
90201–163M0	11 – 33
90201–17713	22 – 30
90201–18620	35 – 25
90201–20611	22 – 25
90201–257J2	22 – 26
90209–08013	21 – 12
90249–07190	22 – 37
90267–48101	10 – 6
	10 – 15
	30 – 6
90269–06003	31 – 38
90269–07010	29 – 7
	29 – 23
90269–07064	28 – 4
	29 – 25
	29 – 27
90269–10001	4 – 10
90269–10005	28 – 6
	28 – 16
	28 – 18
	28 – 23
	29 – 22
	30 – 7
90280–04052	35 – 26
90338–15004	29 – 28
90338–24204	31 – 40
90340–12097	8 – 5
90340–14036	22 – 16
90383–12002	24 – 11
90384–14080	14 – 2
90387–046N7	12 – 43
90387–06553	26 – 20
90387–066J1	13 – 16
90387–07598	13 – 13
90387–08100	21 – 14
90387–10109	14 – 12
90387–15019	31 – 7
90387–252M8	22 – 27
90387–30006	11 – 23
90401–10015	18 – 30
90430–08119	22 – 35
90430–14043	22 – 17
90462–05061	1 – 15
90462–06007	22 – 57
90462–08007	22 – 56
90464–04002	18 – 33
90464–14134	36 – 42
90464–16021	19 – 7
90464–23003	5 – 21
90464–36007	36 – 30
90465–06011	22 – 18
90465–12356	36 – 33
	36 – 43
90465–13152	30 – 2
	36 – 31
90465–13275	30 – 3
	36 – 32
90468–10049	5 – 14
90480–01400	13 – 12
90480–13398	28 – 12
90480–13567	28 – 21
90480–18290	13 – 15
90480–20564	35 – 19
90480–25004	31 – 8
90501–10060	22 – 36
90501–264A9	3 – 5
90502–10013	12 – 42
90508–40015	14 – 8
90520–15007	30 – 9
91312–06012	22 – 54
91317–08045	23 – 7
91402–20012	22 – 41
	24 – 6
91402–25020	11 – 7
	11 – 15
	11 – 35
	12 – 34
91490–25020	18 – 28
91609–40020	22 – 33
91609–40040	22 – 51
91690–20020	26 – 9
91690–30012	26 – 11
91702–05010	5 – 13
91702–06014	24 – 5
91702–06022	22 – 39
92902–04600	36 – 16
	36 – 19
92902–06200	22 – 40
92902–08100	18 – 25
92902–08200	32 – 17
92907–06100	33 – 10
	33 – 17
92907–10600	23 – 2
9290N–06600	33 – 9
	33 – 16
	33 – 27
93102–12224	22 – 43
93102–20281	22 – 52
93102–25017	22 – 5
93102–25360	22 – 6
	22 – 11
93102–35014	8 – 3
	8 – 10
93102–35109	25 – 3
	25 – 7
93210–132A8	14 – 11
93210–15566	35 – 33
93210–22344	8 – 17
93305–00602	11 – 29
93306–00810	22 – 4
	22 – 10
93306–20201	8 – 4
	8 – 11
93306–20401	22 – 3
	22 – 9
93306–20421	22 – 8
93306–20548	22 – 2
93306–20714	8 – 9
93306–30578	25 – 2
	25 – 6
93306–30709	8 – 2
93450–21053	2 – 5
93900–00022	11 – 26
	25 – 16
94702–00348	1 – 8
95022–06012	18 – 36
95022–08016	24 – 9
95022–08025	27 – 7
95302–06600	35 – 11
95302–06800	13 – 6
95302–18600	35 – 24
9530N–06600	33 – 8
	33 – 15
95602–06200	7 – 5
	10 – 17
95602–08100	24 – 3
95602–08200	24 – 12
95602–08710	1 – 17
95602–10100	23 – 3
95602–10200	9 – 12
	11 – 17
	11 – 20
95602–12100	12 – 4
95602–12200	9 – 15
95604–16200	11 – 34
95607–10200	11 – 9
95622–08618	1 – 7
95702–06500	14 – 5
95702–08500	5 – 2
	7 – 8
	7 – 10
	12 – 6
	14 – 7
	14 – 14
	14 – 17
	35 – 9
	36 – 12
95702–10500	11 – 6
95802–06040	29 – 18
95802–08035	14 – 6
95812–06010	17 – 3
95812–06016	24 – 8
95812–06025	6 – 11
95812–08012	17 – 4
95812–08020	10 – 8
	12 – 7
95812–08025	18 – 29
95812–08045	8 – 13
95812–08055	26 – 30
95812–08075	22 – 59
95812–10016	9 – 16
95812–10030	25 – 13
95812–10045	9 – 11
95812–10090	14 – 9
95812–12065	9 – 7
95817–06014	9 – 22
	10 – 20
95822–06012	7 – 4
95822–06016	34 – 2
95822–06016	35 – 20
	35 – 23
95822–06030	1 – 14
	14 – 4
95822–08014	14 – 16
95822–08050	22 – 14
95822–10025	10 – 3
95822–10045	11 – 19
95822–12025	35 – 5
95827–08065	27 – 5
95880–06016	31 – 15
95880–06020	31 – 24
	32 – 31
95880–06025	26 – 24
95880–06030	31 – 4
95880–08025	32 – 29
95D02–06010	13 – 19
	23 – 8
95D02–06012	10 – 10
	18 – 38
	18 – 40
	19 – 6
	36 – 13
95D02–06016	5 – 10
	32 – 25
95D02–06020	4 – 2
	4 – 8
95D02–06025	18 – 41
95D02–06030	10 – 13
	29 – 6
95D32–06012	27 – 4
	35 – 16
	35 – 30
	36 – 40
95D32–06014	9 – 18
95D32–08020	35 – 7
	35 – 13
95D32–08040	22 – 13
97002–05010	35 – 1
97012–10050	8 – 14
97012–10070	1 – 4
97022–06025	32 – 13
97080–06016	32 – 38
97080–06020	32 – 34
97507–05512	19 – 5
97702–50016	5 – 20
	32 – 5
	32 – 9
97702–50516	36 – 20
97702–60420	4 – 4
97707–40525	12 – 40
98502–04010	36 – 15
	36 – 18
98502–06014	6 – 5
9850N–04010	33 – 23
9850N–05016	33 – 22
9850N–05018	33 – 31
98780–06014	26 – 7
98780–06035	26 – 23
98902–06014	36 – 36
98980–06012	32 – 27
99001–07600	5 – 15
99009–30400	11 – 4
99009–32400	11 – 13
99009–55500	11 – 30
99009–62500	25 – 4
	25 – 8
99530–08016	8 – 7
99530–12016	22 – 15
99530–14016	1 – 6
	22 – 50