YAMAHA

# PARTS CATALOGUE

# DR2A21 PTV ( J0D5 ) CANADA, EUROPE, OTHERS

YAMAHA
GENUINE
Parts & Accessories

1WJ0D-100E1

( )

DR2A21 PTV
PARTS CATALOGUE
©2020 by Yamaha Motor Co., Ltd.
1st edition, October 2020
All rights reserved.
Any reprinting or unauthorized use
without the written permission of
Yamaha Motor Co., Ltd.
is expressly prohibited.
Printed in Japan.

# FOREWORD

This Parts Catalogue is related to the parts for the model(s) on the cover page. When you are ordering replacement parts, please refer to this Parts Catalogue and quote both part numbers and part names correctly.

1. Modifications or additions which have been made after the issue of the Parts Catalogue will be announced in the Parts News.
   It is advisable that you make the necessary corrections to the Parts Catalogue according to the Parts News.

2. Abbreviations
   The following abbreviations are used in this Parts Catalogue.

   "UR" Use specified parts number.

   "UN" Use as many as needed.

   "AP" Alternate Parts

   "LM" Locally Made (Parts need to be ordered locally)

   "F#" Frame No. (Applicable machine No.)

   "O/S" Over Size

3. The number of components for assembly
   - Parts, which are to be supplied in an assembly, are listed with a dot (.) in front of the part name as shown below.
   - The numeral appearing to the right of each component part indicates the quantity of parts for each assembly unit.

| PART NO. | DESCRIPTION | Q'TY | REMARKS |
|---|---|---|---|
| 2F5–83310–60 | FRONT FLASHER LIGHT ASSY | 2 | |
| 115–83311–60 | .BULB (6V–18W) | 1 | |

4. Applicable colours of graphics are represented in the "REMARKS" as shown below.

| PART NO. | DESCRIPTION | Q'TY | REMARKS |
|---|---|---|---|
| 2N4–24110–00–X5 | FUEL TANK COMP. | 2 | MXR |
| 3J1–24240–10 | .GRAPHIC, FUEL TANK | 1 | FOR MXR |

5. Note that the illustrations for reference in finding parts numbers are not to be used for assembling. When assembling, please use the applicable service manual.

6. The asterisk (*) before a reference number indicates modified items after the first edition.

7. Applicable Serial No.

Engine Serial No.

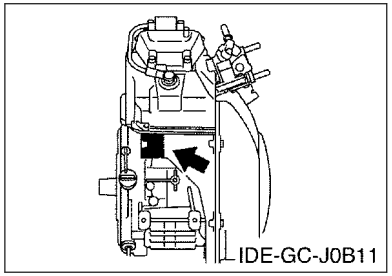


Frame Serial No.

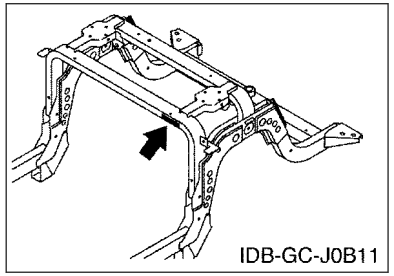


8. Applicable Colour Code (The (*) mark shows Model colour.)

| Abbreviation | Colour Name | Colour Code |
|---|---|---|
| BMG(*) | BLACK METALLIC G | 1050 |
| BW1(*) | BLUISH WHITE 1 | 1571 |
| DNBME(*) | DARK GRAYISH BLUE METALLIC E | 0866 |
| DRMV(*) | DEEP RED METALLIC V | 1365 |
| LNMP(*) | LIGHT GRAY METALLIC P | 0925 |
| MDNM7(*) | MAT DARK GRAY METALLIC 7 | 1606 |
| MDOM1(*) | MAT DEEP ORANGE METALLIC 1 | 1778 |
| MNYM2(*) | MAT GRAYISH YELLOW METALLIC 2 | 1749 |
| VPBM6(*) | VIVID PURPLISH BLUE METALLIC 6 | 1002 |
| | | |

9. Quantity Column Information

| Column No. | Name Of Q'ty Column | Destination |
|---|---|---|
| 1 | J0D5 | CANADA, EUROPE, OTHERS |
| | | |
| | | |
| | | |
| | | |

10. Applicable Starting Serial No.

Frame Serial No.

| Serial No. | Name Of Q'ty Column | Model Code |
|---|---|---|
| J0D-400101 | J0D5 | J0D5 |
| | | |
| | | |
| | | |
| | | |

# CONTENTS

ENGINE 1 ..... 1

## ENGINE

CYLINDER HEAD ..... 2
CRANKSHAFT & PISTON ..... 3
CAMSHAFT & VALVE ..... 4
AIR SHROUD & FAN ..... 5
INTAKE 1 ..... 6
INTAKE 2 ..... 7
EXHAUST ..... 8
CRANKCASE ..... 9

## BODY

ENGINE BRACKET ..... 10
REAR ARM & SUSPENSION ..... 11
FRAME ..... 13
FRONT SUSPENSION & WHEEL ..... 15
STEERING ..... 17
FUEL TANK ..... 19
PEDAL WIRE ..... 20
PEDAL ASSEMBLY ..... 21
BRAKE ..... 24
GOVERNOR ..... 25

## DRIVE

PRIMARY SHEAVE ..... 26
SECONDARY SHEAVE ..... 27
TRANSMISSION ..... 28
SHIFTER & CABLES ..... 30
REAR AXLE & WHEEL ..... 31
BUMPER ..... 32
BODY ..... 33
BODY 2 ..... 35
BODY FITTING ..... 38
CARRIER ..... 39
REAR VIEW MIRROR ..... 40
SEAT ..... 41

## ELECTRICAL

STARTING MOTOR ..... 42
HEAD & TAIL LIGHT ..... 43
ELECTRICAL 1 ..... 45
ELECTRICAL 2 ..... 47
ALTERNATE FOR CHASSIS ..... 50
ALTERNATE FOR WINDSHIELD ..... 52
ALTERNATE FOR SUN ROOF ..... 54
ALTERNATE FOR SEAT ..... 55

## INDEX

NUMERICAL INDEX ..... 56

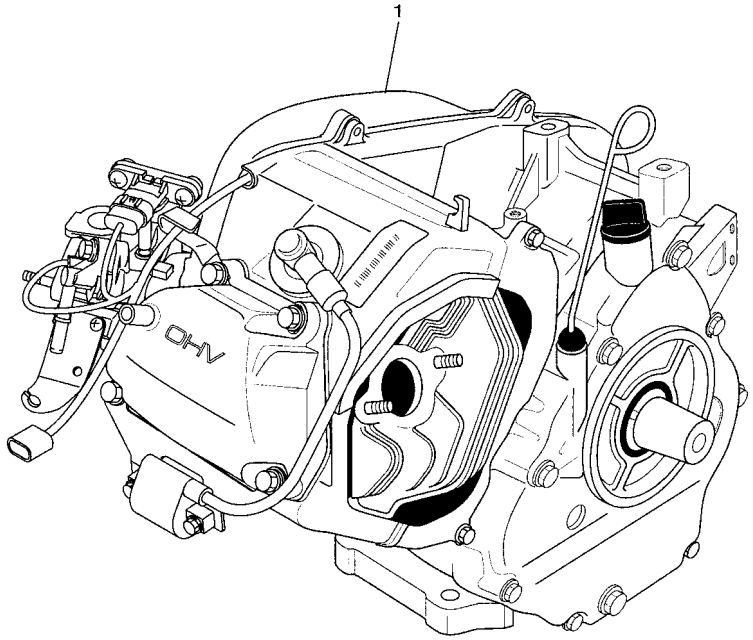

JC04110-L010

## FIG. 1 ENGINE 1

| REF. NO. | PART NO. | DESCRIPTION | J0D5 | | | | | REMARKS |
|---|---|---|---|---|---|---|---|---|
| 1 | J0B–19001–40 | ENGINE ASSEMBLY | 1 | | | | | |

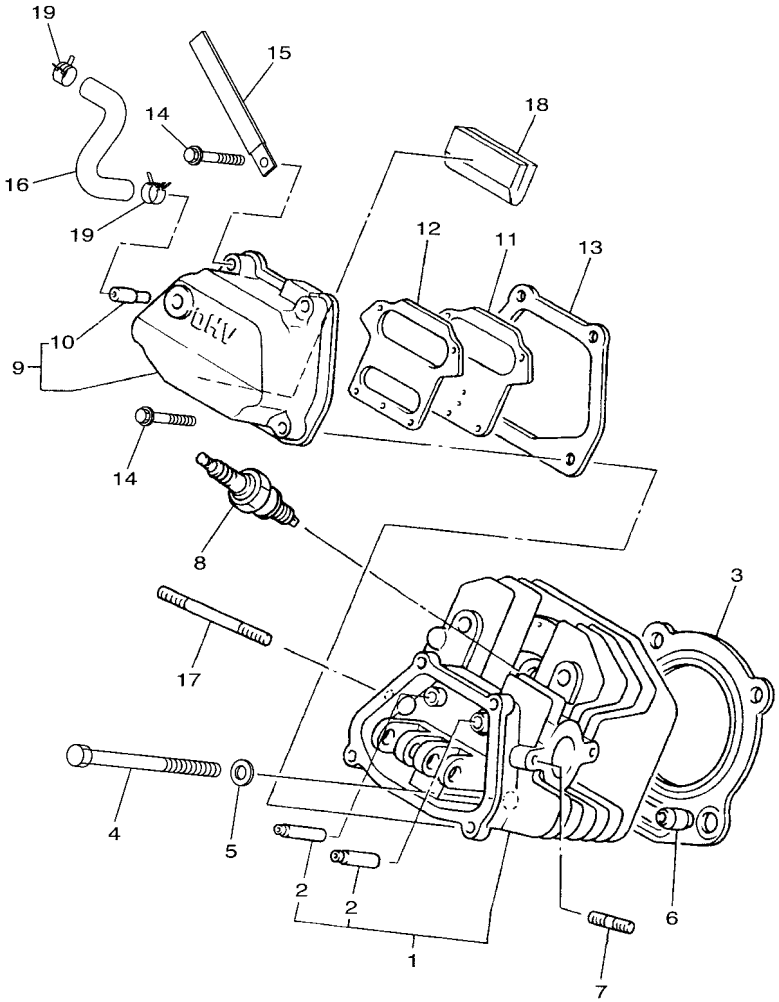

J0B1110-S010

## FIG. 2 CYLINDER HEAD

| REF. NO. | PART NO. | DESCRIPTION | J0D5 | | | | | REMARKS |
|---|---|---|---|---|---|---|---|---|
| 1 | JT0–11111–00 | HEAD, CYLINDER 1 | 1 | | | | | |
| 2 | JN6–11133–10 | .GUIDE, VALVE 1 | 2 | | | | | |
| 3 | JT0–11181–00 | GASKET, CYLINDER HEAD 1 | 1 | | | | | |
| 4 | 97012–10070 | BOLT | 4 | | | | | |
| 5 | 90201–10057 | WASHER, PLATE | 4 | | | | | |
| 6 | 99530–14016 | PIN, DOWEL | 2 | | | | | |
| 7 | 95622–08618 | BOLT, STUD | 2 | | | | | |
| 8 | 94702–00348 | PLUG, SPARK (NGK-BPR2ES) | 1 | | | | | STD |
| | 94702–00343 | PLUG, SPARK (NGK BR4ES) | 1 | | | | | AP |
| 9 | JN6–11191–01 | COVER, CYLINDER HEAD 1 | 1 | | | | | |
| 10 | JN6–11116–00 | .JOINT, BREATHER | 1 | | | | | |
| 11 | JN6–11168–00 | COVER, BREATHER | 1 | | | | | |
| 12 | JN6–11169–00 | GASKET, BREATHER COVER | 1 | | | | | |
| 13 | JN6–11193–00 | GASKET, HEAD COVER 1 | 1 | | | | | |
| 14 | 95822–06030 | BOLT, FLANGE | 4 | | | | | |
| 15 | 90462–05061 | CLAMP | 1 | | | | | |
| 16 | J0B–E1166–00 | PIPE, BREATHER 1 | 1 | | | | | |
| 17 | 95602–08710 | BOLT, STUD | 2 | | | | | |
| 18 | JR7–11163–10 | ELEMENT | 1 | | | | | |
| 19 | 90467–13847 | CLIP | 2 | | | | | |

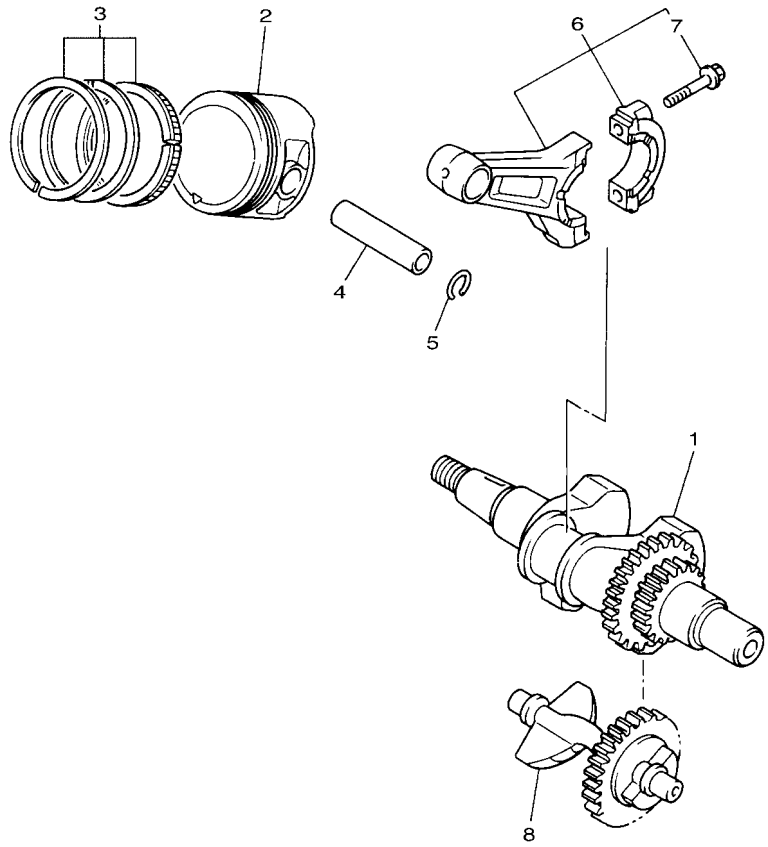

JN7010-6021

## FIG. 3 CRANKSHAFT & PISTON

| REF. NO. | PART NO. | DESCRIPTION | J0D5 | | | | | REMARKS |
|---|---|---|---|---|---|---|---|---|
| 1 | JN6–11400–00 | CRANKSHAFT ASSY | 1 | | | | | |
| 2 | JR7–11631–00–A0 | PISTON (STD) | 1 | | | | | |
| | JR7–11635–00 | PISTON (0.25MM O/S) | 1 | | | | | AP |
| | JR7–11636–00 | PISTON (0.50MM O/S) | 1 | | | | | AP |
| 3 | JR7–11610–00 | PISTON RING SET (STD) | 1 | | | | | |
| | JR7–11610–10 | PISTON RING SET (0.25MM O/S) | 1 | | | | | AP |
| | JR7–11610–20 | PISTON RING SET (0.50MM O/S) | 1 | | | | | AP |
| 4 | 583–11633–00 | PIN, PISTON | 1 | | | | | |
| 5 | 93450–21053 | CIRCLIP | 2 | | | | | |
| 6 | JN6–11650–10 | CONNECTING ROD ASSY | 1 | | | | | |
| 7 | JN6–11654–10 | .BOLT, CONNECTING ROD | 2 | | | | | |
| 8 | JN6–11454–10 | WEIGHT 1 | 1 | | | | | |

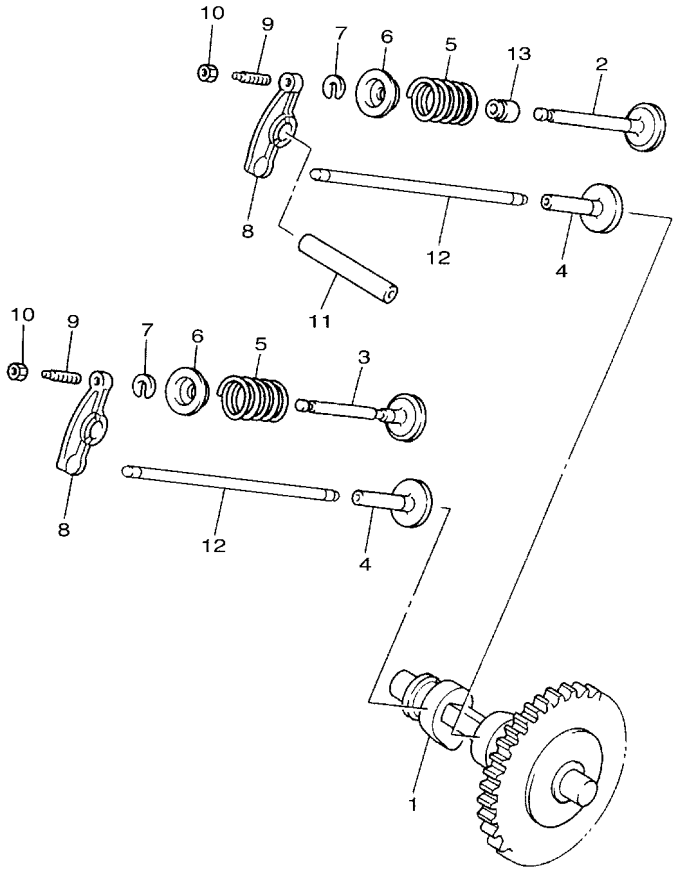

JD13110-K030

## FIG. 4 CAMSHAFT & VALVE

| REF. NO. | PART NO. | DESCRIPTION | J0D5 | | | | | REMARKS |
|---|---|---|---|---|---|---|---|---|
| 1 | JR7–12180–10 | CAMSHAFT ASSY 2 | 1 | | | | | |
| 2 | JN6–12111–10 | VALVE, INTAKE | 1 | | | | | |
| 3 | 7RH–12121–10 | VALVE, EXHAUST | 1 | | | | | |
| 4 | JN6–12153–10 | LIFTER, VALVE | 2 | | | | | |
| 5 | 90501–264A9 | SPRING, COMPRESSION | 2 | | | | | |
| 6 | J38–12117–01 | RETAINER, VALVE SPRING | 2 | | | | | |
| 7 | J38–12118–00 | LOCK, VALVE SPRING RETAINER | 2 | | | | | |
| 8 | JN6–12151–10 | ARM, VALVE ROCKER | 2 | | | | | |
| 9 | 22F–12159–10 | SCREW, VALVE ADJUSTING | 2 | | | | | |
| 10 | 90170–05302 | NUT | 2 | | | | | |
| 11 | J38–12156–20 | SHAFT, ROCKER 2 | 1 | | | | | |
| 12 | JR7–12154–10 | ROD, VALVE PUSH | 2 | | | | | |
| 13 | 4G0–12119–00 | SEAL, VALVE STEM | 1 | | | | | |

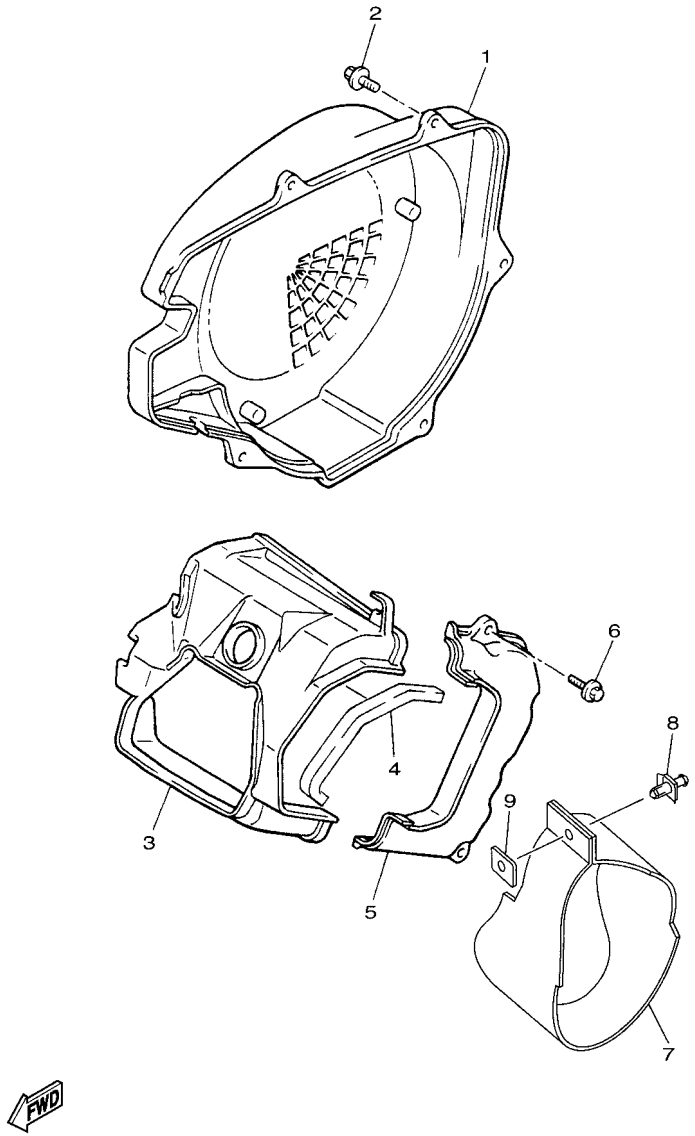


J0B1110-S040

## FIG. 5 AIR SHROUD & FAN

| REF. NO. | PART NO. | DESCRIPTION | J0D5 | | | | | REMARKS |
|---|---|---|---|---|---|---|---|---|
| 1 | JN6–12621–02 | CASE, FAN | 1 | | | | | |
| 2 | 95802–06020 | BOLT, FLANGE | 4 | | | | | |
| 3 | JN6–12651–01 | AIR SHROUD, CYLINDER 1 | 1 | | | | | |
| 4 | JR7–12658–00 | DAMPER, AIR SHROUD 1 | 1 | | | | | |
| 5 | JN6–12652–00 | AIR SHROUD, CYLINDER 2 | 1 | | | | | |
| 6 | 95802–06020 | BOLT, FLANGE | 2 | | | | | |
| 7 | J0B–E2691–00 | DUCT 1 | 1 | | | | | |
| 8 | 90269–10001 | RIVET | 1 | | | | | |
| 9 | JR7–12634–00 | PLATE 2 | 1 | | | | | |

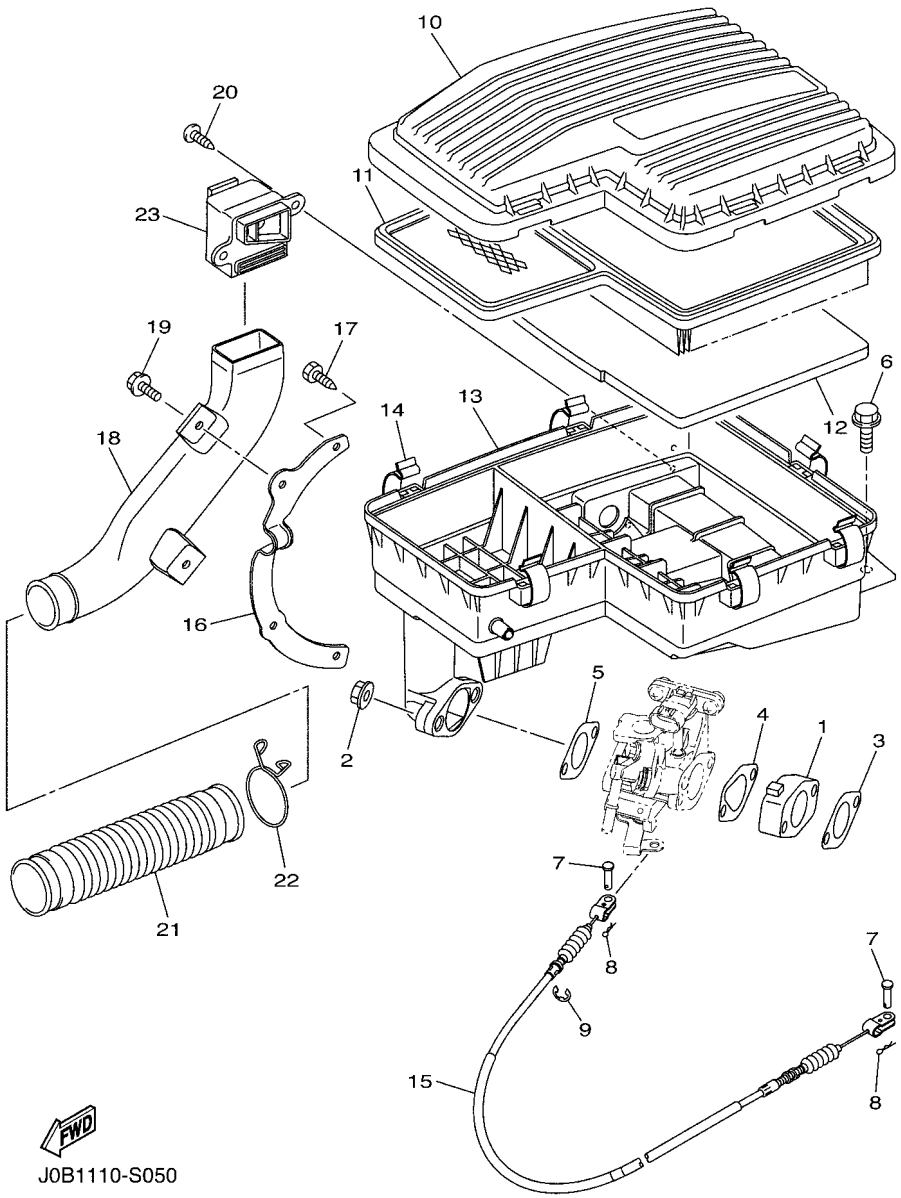


J0B1110-S050

## FIG. 6 INTAKE 1

| REF. NO. | PART NO. | DESCRIPTION | J0D5 | | | | | REMARKS |
|---|---|---|---|---|---|---|---|---|
| 1 | JC0–13595–00 | JOINT | 1 | | | | | |
| 2 | 95702–08500 | NUT, FLANGE | 2 | | | | | |
| 3 | JN6–13567–00 | GASKET | 1 | | | | | |
| 4 | JC0–13567–00 | GASKET | 1 | | | | | |
| 5 | JN6–13567–00 | GASKET | 1 | | | | | |
| 6 | 95802–06016 | BOLT, FLANGE | 2 | | | | | |
| 7 | 91702–05010 | PIN, CLEVIS | 2 | | | | | |
| 8 | 90468–10049 | CLIP | 2 | | | | | |
| 9 | 99001–07600 | CIRCLIP | 1 | | | | | |
| 10 | J0B–E4412–00 | CAP, CLEANER CASE 1 | 1 | | | | | |
| 11 | J0B–E4451–01 | ELEMENT, AIR CLEANER | 1 | | | | | |
| 12 | JU0–E445E–00 | FILTER 1 | 1 | | | | | |
| 13 | J0B–E4411–01 | CASE, AIR CLEANER 1 | 1 | | | | | |
| 14 | 3B4–14424–00 | CLIP, CAP FITTING | 7 | | | | | |
| 15 | J0B–F6312–00 | CABLE, THROTTLE 2 | 1 | | | | | |
| 16 | J0B–E4413–00 | STAY | 1 | | | | | |
| 17 | 97702–60416 | SCREW, TAPPING | 2 | | | | | |
| 18 | J0B–E5471–00 | DUCT, AIR | 1 | | | | | |
| 19 | 90105–06057 | BOLT, FLANGE | 2 | | | | | |
| 20 | 97702–50016 | SCREW,TAPPING | 2 | | | | | |
| 21 | J0B–E4437–00 | DUCT | 1 | | | | | |
| 22 | 90467–24140 | CLIP | 1 | | | | | |
| 23 | J0B–E4453–01 | JOINT, AIR CLEANER 1 | 1 | | | | | |

## FIG. 7 INTAKE 2

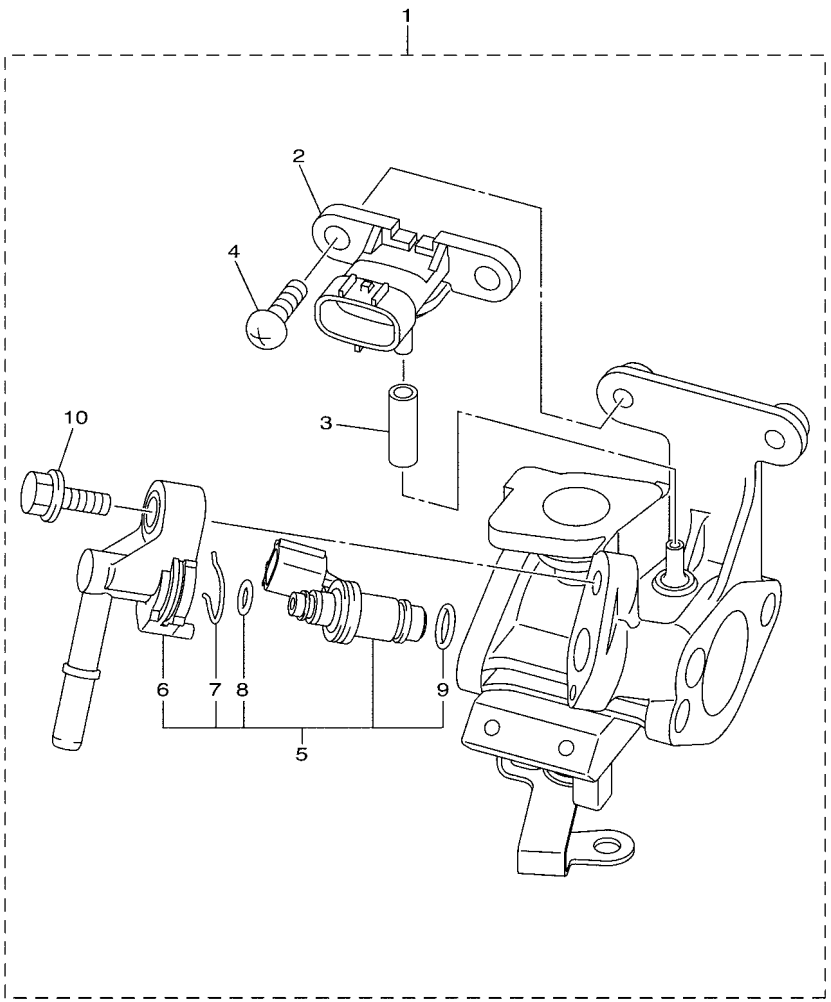


FWD

J0B1110-S061

| REF. NO. | PART NO. | DESCRIPTION | J0D5 | | | | | REMARKS |
|---|---|---|---|---|---|---|---|---|
| 1 | J0B–13750–01 | THROTTLE BODY ASSY | 1 | | | | | |
| 2 | 1C7–82380–00 | .SENSOR, PRESSURE | 1 | | | | | |
| 3 | JC0–13542–01 | .HOSE, VACUUM SENSING 1 | 1 | | | | | |
| 4 | 98502–06014 | .SCREW, PAN HEAD | 2 | | | | | |
| 5 | J0B–13770–00 | .INJECTOR ASSY | 1 | | | | | |
| 6 | 52S–13938–00 | ..PIPE | 1 | | | | | |
| 7 | 52B–14137–00 | ..CLIP | 1 | | | | | |
| 8 | 52B–14147–00 | ..O-RING | 1 | | | | | |
| 9 | 5CA–14147–00 | ..O-RING | 1 | | | | | |
| 10 | 95812–06025 | .BOLT, FLANGE | 1 | | | | | |

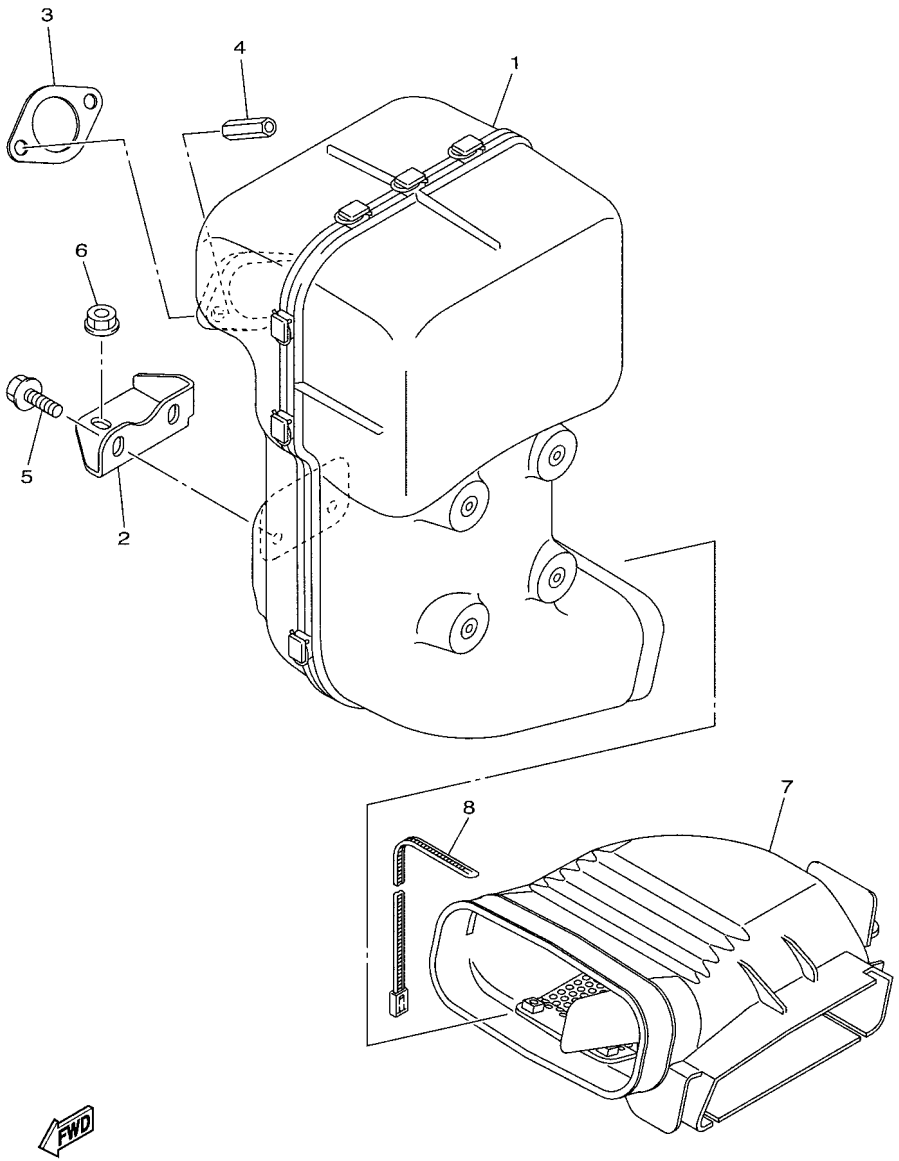


J0B4110-V080

## FIG. 8 EXHAUST

| REF. NO. | PART NO. | DESCRIPTION | J0D5 | | | | | REMARKS |
|---|---|---|---|---|---|---|---|---|
| 1 | J0B–E4710–03 | MUFFLER ASSY 1 | 1 | | | | | |
| 2 | J0B–F1436–00 | BRKT., MUFF. 2 | 1 | | | | | |
| 3 | 7KY–14613–01 | GASKET, EXHAUST 1 | 1 | | | | | |
| 4 | JW1–E4713–00 | NUT, MUFFLER JOINT | 2 | | | | | |
| 5 | 95822–08020 | BOLT, FLANGE | 2 | | | | | |
| 6 | 95702–08500 | NUT, FLANGE | 1 | | | | | |
| 7 | J0B–E4430–10 | DUCT ASSY | 1 | | | | | |
| 8 | 90464–09823 | CLAMP | 1 | | | | | |

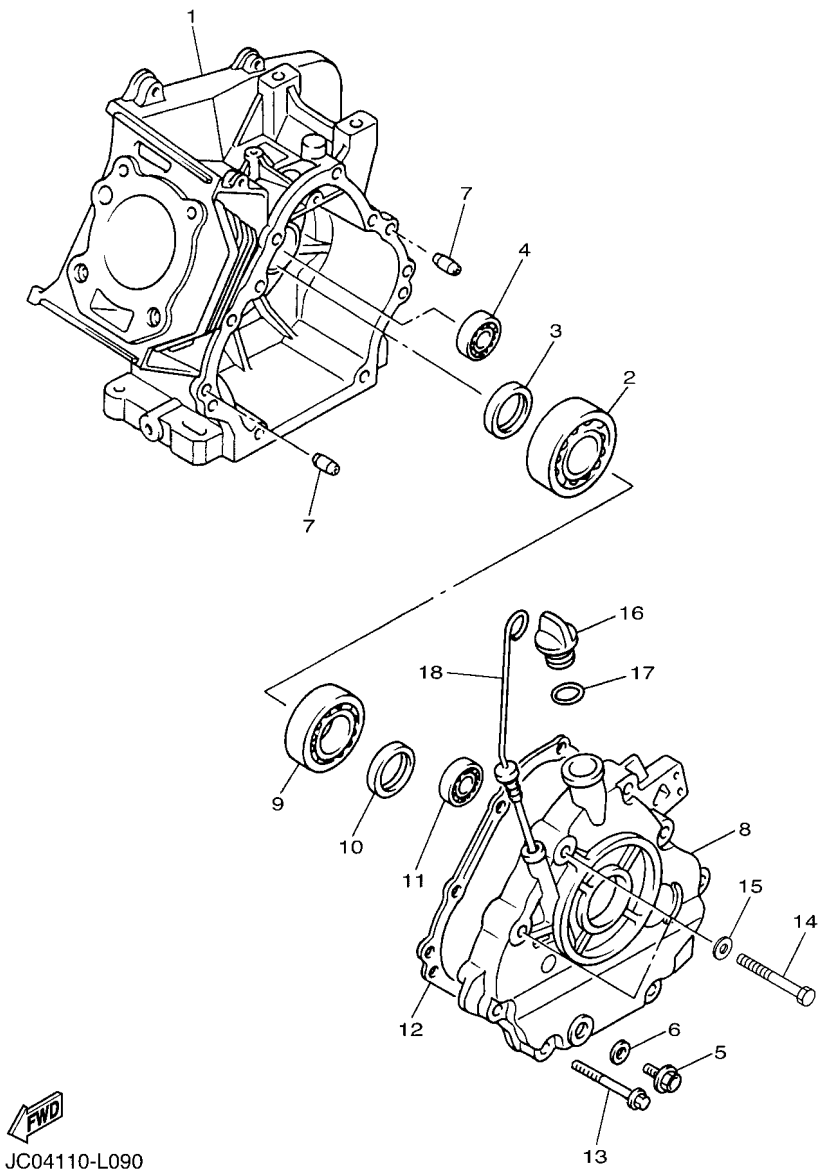


## FIG. 9 CRANKCASE

| REF. NO. | PART NO. | DESCRIPTION | J0D5 | | | | | REMARKS |
|---|---|---|---|---|---|---|---|---|
| 1 | JC0–15111–01 | CRANKCASE 1 | 1 | | | | | |
| 2 | 93306–30709 | BEARING | 1 | | | | | |
| 3 | 93102–35014 | OIL SEAL | 1 | | | | | |
| 4 | 93306–20201 | BEARING | 1 | | | | | |
| 5 | 90340–12097 | PLUG, STRAIGHT SCREW | 1 | | | | | |
| 6 | 812–11198–00 | GASKET | 1 | | | | | |
| 7 | 99530–08016 | PIN, DOWEL | 2 | | | | | |
| 8 | JN6–15411–10 | COVER, CRANKCASE 1 | 1 | | | | | |
| 9 | 93306–20714 | BEARING | 1 | | | | | |
| 10 | 93102–35014 | OIL SEAL | 1 | | | | | |
| 11 | 93306–20201 | BEARING | 1 | | | | | |
| 12 | JY2–15451–00 | GASKET, CRANKCASE COVER 1 | 1 | | | | | |
| 13 | 95812–08045 | BOLT, FLANGE | 6 | | | | | |
| 14 | 97012–10050 | BOLT | 2 | | | | | |
| 15 | 90201–10057 | WASHER, PLATE | 2 | | | | | |
| 16 | 796–15363–01 | PLUG, OIL | 1 | | | | | |
| 17 | 93210–22344 | O-RING | 1 | | | | | |
| 18 | J38–15361–00 | GAUGE, LEVEL | 1 | | | | | |

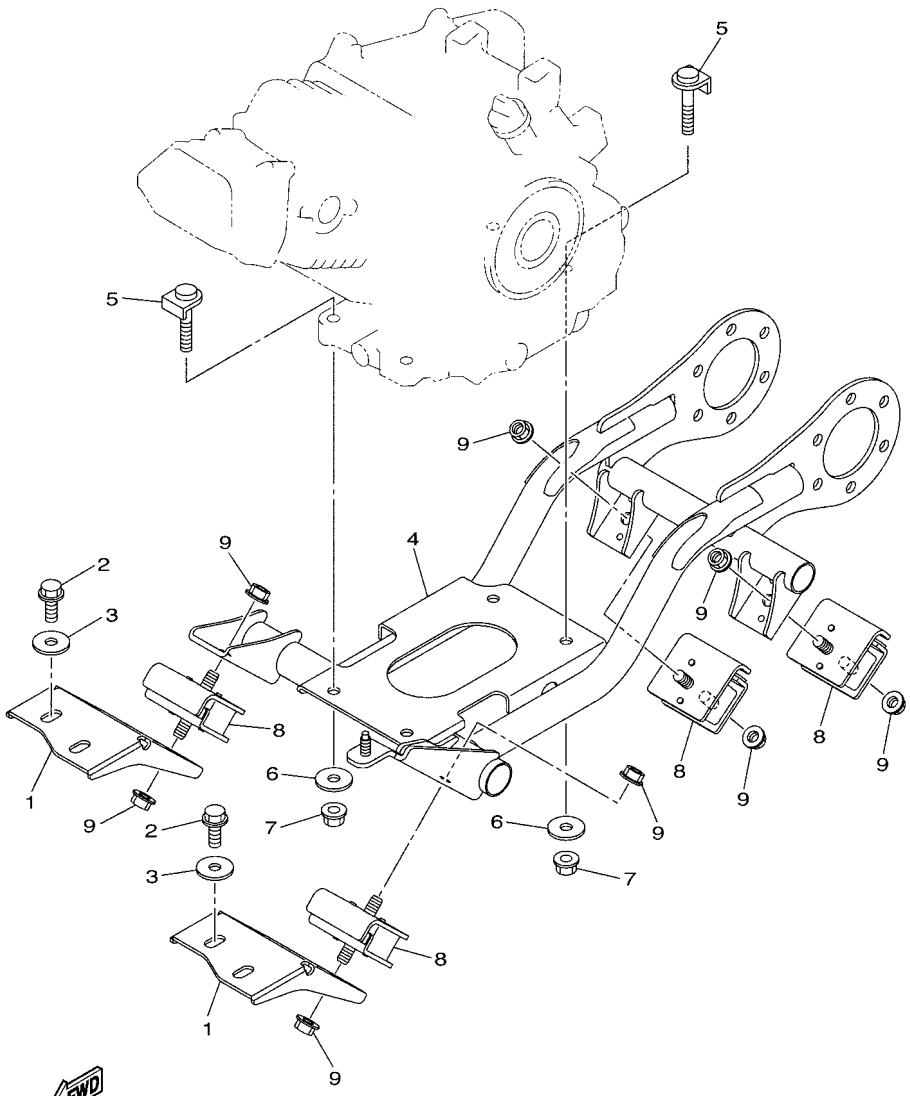

J0B1110-S090

## FIG. 10 ENGINE BRACKET

| REF. NO. | PART NO. | DESCRIPTION | J0D5 | | | | | REMARKS |
|---|---|---|---|---|---|---|---|---|
| 1 | J0B–F1411–00 | BRACKET, ENGINE 1 | 2 | | | | | |
| 2 | 95812–10020 | BOLT, FLANGE | 4 | | | | | |
| 3 | 90201–10072 | WASHER, PLATE | 4 | | | | | |
| 4 | J0B–F1419–01 | BRACKET, ENGINE 2 | 1 | | | | | |
| 5 | JT0–21481–00 | BOLT, ENGINE MOUNTING 1 | 4 | | | | | |
| 6 | 92902–10200 | WASHER | 4 | | | | | |
| 7 | 95602–10200 | NUT, S/L FLANGE | 4 | | | | | |
| 8 | J0B–F1485–00 | DAMPER, RUBBER 1 | 4 | | | | | |
| 9 | 95602–10200 | NUT, S/L FLANGE | 8 | | | | | |

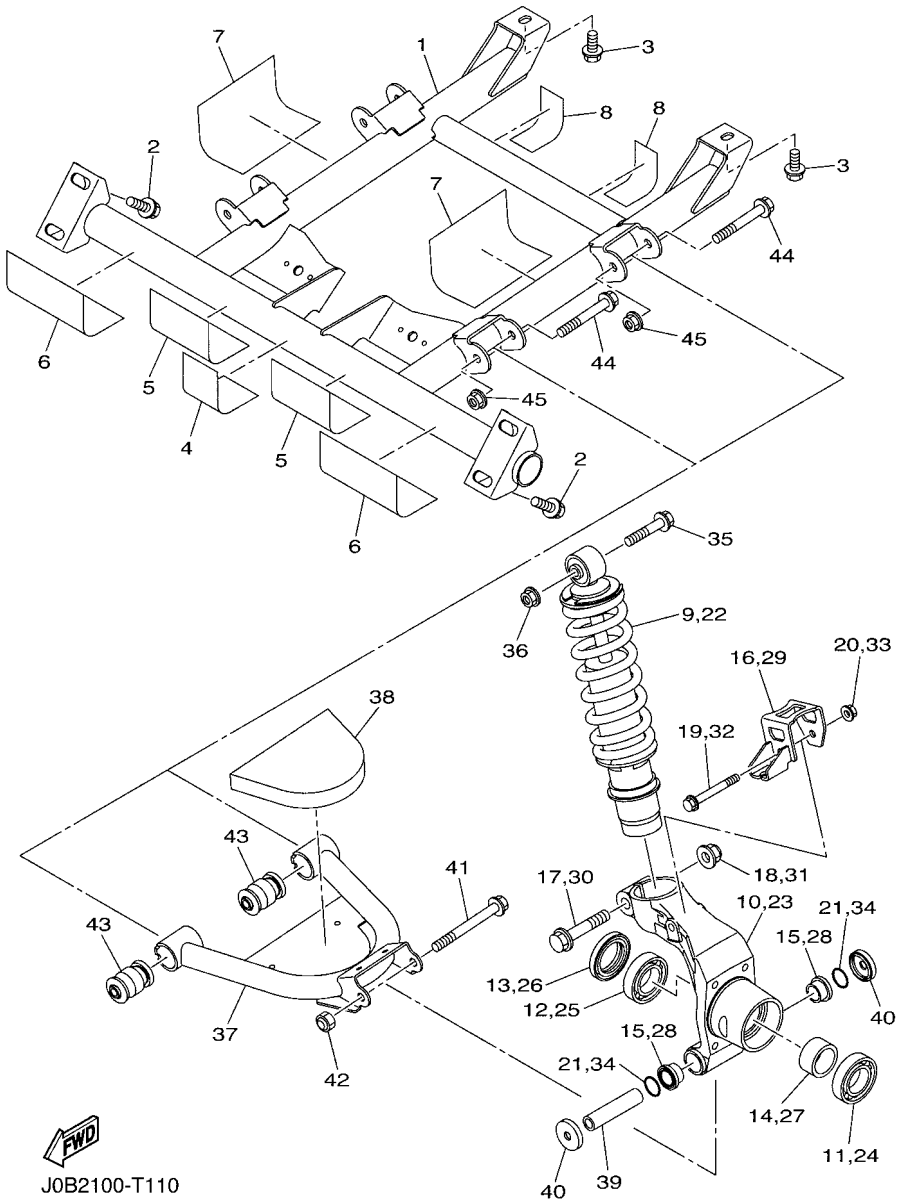


## FIG. 11 REAR ARM & SUSPENSION

| REF. NO. | PART NO. | DESCRIPTION | J0D5 | | | | | REMARKS |
|---|---|---|---|---|---|---|---|---|
| 1 | J0B–F2110–02 | REAR ARM COMP. | 1 | | | | | |
| 2 | 95822–10020 | BOLT, FLANGE | 4 | | | | | |
| 3 | J0B–F1531–00 | BOLT | 2 | | | | | |
| 4 | J0B–F8218–00 | SEAL 1 | 1 | | | | | |
| 5 | J0B–F8228–00 | SEAL 2 | 2 | | | | | |
| 6 | J0B–F8238–00 | SEAL 3 | 2 | | | | | |
| 7 | J0B–F8268–00 | SEAL 4 | 2 | | | | | |
| 8 | J0B–F8278–00 | SEAL 5 | 2 | | | | | |
| 9 | J0B–F2210–00 | SHOCK ABSORBER ASSY, REAR | 1 | | | | | |
| 10 | J0B–F53A1–01 | KNUCKLE, REAR | 1 | | | | | |
| 11 | 93306–006X0 | BEARING | 1 | | | | | |
| 12 | 93306–006Y4 | BEARING | 1 | | | | | |
| 13 | 93106–38046 | OIL SEAL | 1 | | | | | |
| 14 | J0B–F3113–00 | COLLAR | 1 | | | | | |
| 15 | 90381–17803 | BUSH, SOLID | 2 | | | | | |
| 16 | J0B–F537W–00 | BRACKET 1 | 1 | | | | | |
| 17 | 95812–12055 | BOLT, FLANGE | 1 | | | | | |
| 18 | 90185–12811 | NUT, SELF-LOCKING | 1 | | | | | |
| 19 | 95812–08060 | BOLT, FLANGE | 1 | | | | | |
| 20 | 95702–08500 | NUT, FLANGE | 1 | | | | | |
| 21 | 93210–19001 | O-RING | 2 | | | | | |
| 22 | J0B–F2210–00 | SHOCK ABSORBER ASSY, REAR | 1 | | | | | |
| 23 | J0B–F53A1–01 | KNUCKLE, REAR | 1 | | | | | |
| 24 | 93306–006X0 | BEARING | 1 | | | | | |
| 25 | 93306–006Y4 | BEARING | 1 | | | | | |
| 26 | 93106–38046 | OIL SEAL | 1 | | | | | |
| 27 | J0B–F3113–00 | COLLAR | 1 | | | | | |

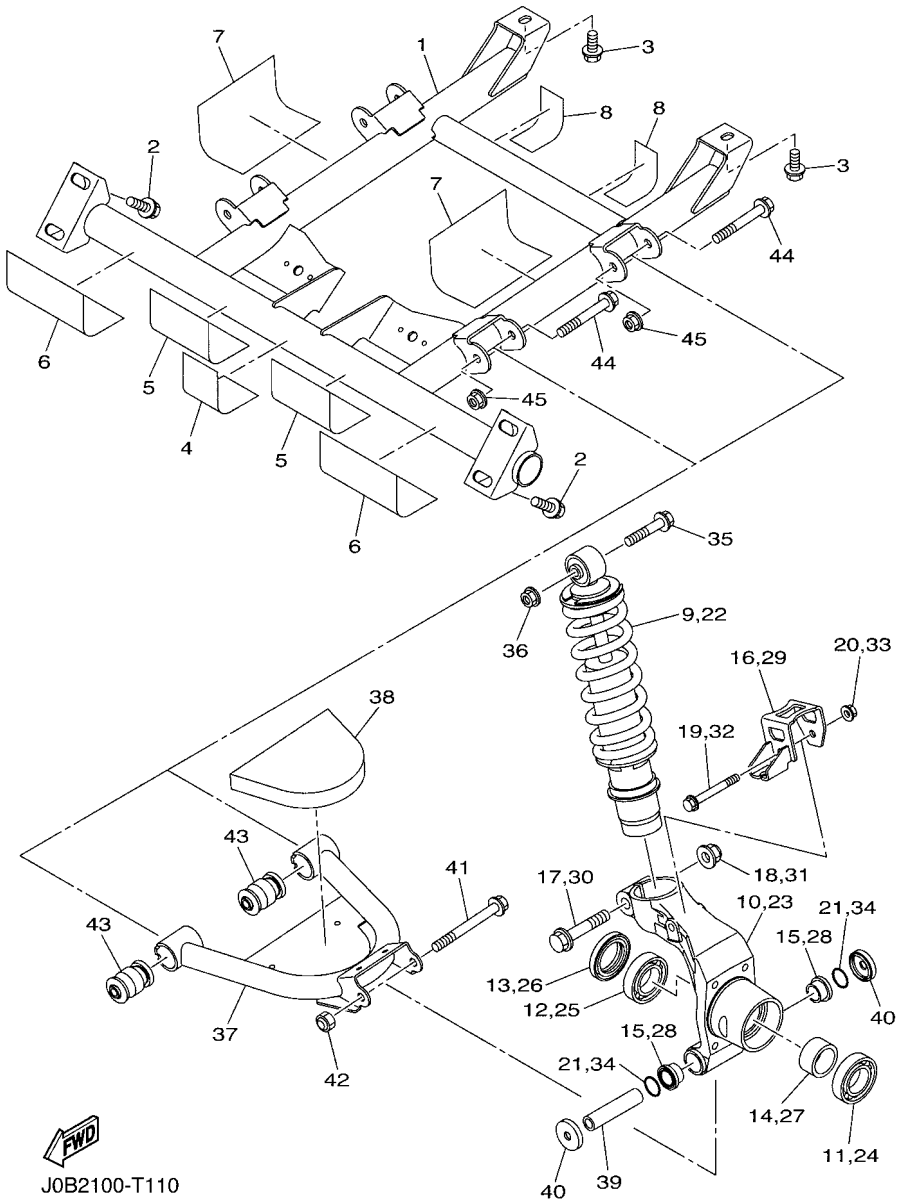


## FIG. 11 REAR ARM & SUSPENSION

| REF. NO. | PART NO. | DESCRIPTION | J0D5 | | | | | REMARKS |
|---|---|---|---|---|---|---|---|---|
| 28 | 90381–17803 | BUSH, SOLID | 2 | | | | | |
| 29 | J0B–F537W–00 | BRACKET 1 | 1 | | | | | |
| 30 | 95812–12055 | BOLT, FLANGE | 1 | | | | | |
| 31 | 90185–12811 | NUT, SELF-LOCKING | 1 | | | | | |
| 32 | 95812–08060 | BOLT, FLANGE | 1 | | | | | |
| 33 | 95702–08500 | NUT, FLANGE | 1 | | | | | |
| 34 | 93210–19001 | O-RING | 2 | | | | | |
| 35 | 95812–10055 | BOLT, FLANGE | 2 | | | | | |
| 36 | 95602–10200 | NUT, S/L FLANGE | 2 | | | | | |
| 37 | J0B–F2171–01 | ARM, REAR 1 | 2 | | | | | |
| 38 | J0B–K8254–00 | PAD, SILENCER 4 | 2 | | | | | |
| 39 | 5KM–23448–00 | SPACER | 2 | | | | | |
| 40 | 5UG–23517–10 | COVER, THRUST 1 | 4 | | | | | |
| 41 | 90105–10185 | BOLT, FLANGE | 2 | | | | | |
| 42 | 90185–10012 | NUT, SELF-LOCKING | 2 | | | | | |
| 43 | 2HR–23526–00 | BUSH | 4 | | | | | |
| 44 | 90105–10267 | BOLT, FLANGE | 4 | | | | | |
| 45 | 95602–10200 | NUT, S/L FLANGE | 4 | | | | | |

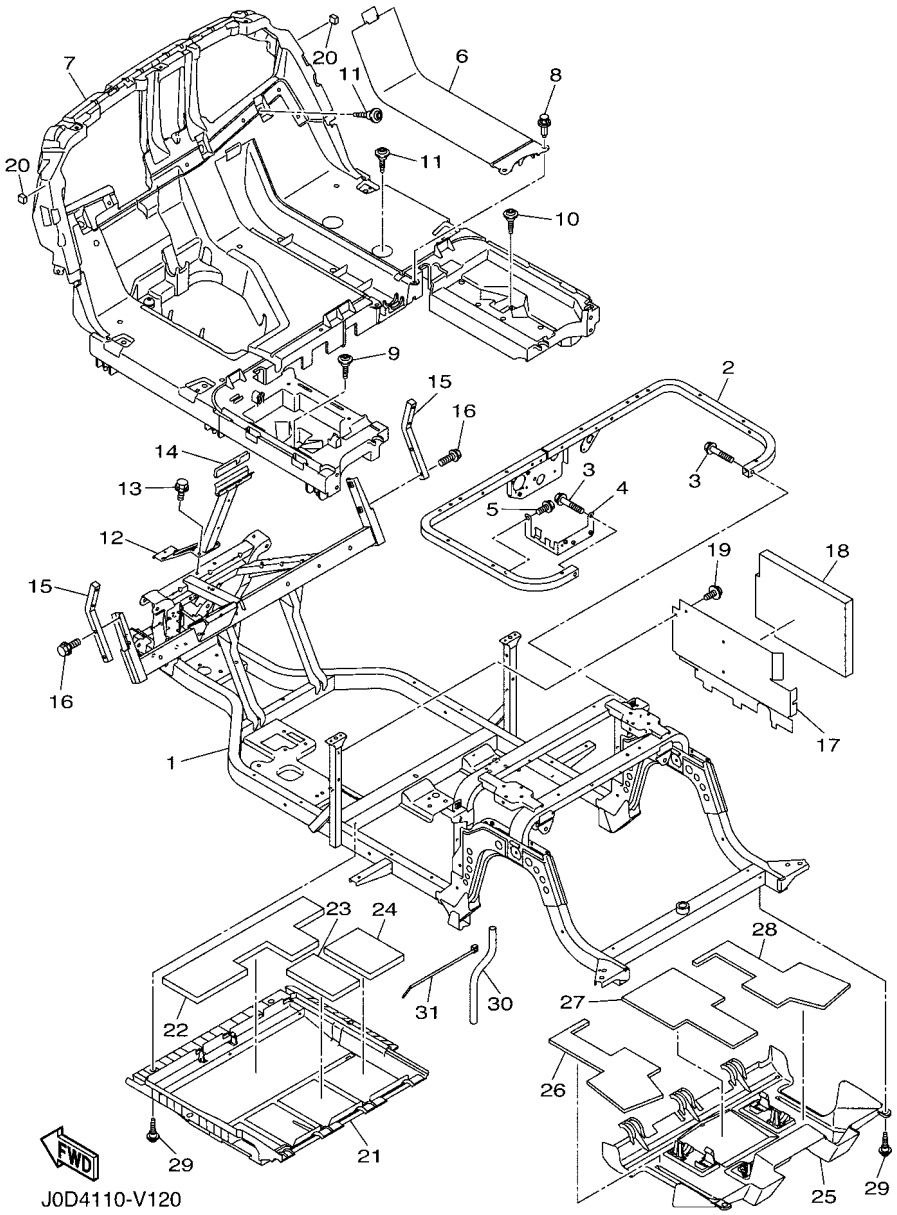


## FIG. 12 FRAME

| REF. NO. | PART NO. | DESCRIPTION | J0D5 | | | | | REMARKS |
|---|---|---|---|---|---|---|---|---|
| 1 | J0B–F2501–30 | FRAME COMP. | 1 | | | | | |
| 2 | J0B–F255G–00 | MEMBER, SEAT SUPPORT | 1 | | | | | |
| 3 | 95812–08040 | BOLT, FLANGE | 2 | | | | | |
| 4 | J0B–F253B–01 | STAY, RELAY | 1 | | | | | |
| 5 | 90105–08867 | BOLT, FLANGE | 1 | | | | | |
| 6 | J0B–F7413–01 | COVER, FOOTREST | 1 | | | | | |
| 7 | J0D–F7411–01 | FOOTREST 1 | 1 | | | | | |
| 8 | 90269–09003 | RIVET | 2 | | | | | |
| 9 | J0B–F1738–00 | BOLT | 1 | | | | | |
| 10 | J0B–F1738–00 | BOLT | 1 | | | | | |
| 11 | J0B–F1738–00 | BOLT | 7 | | | | | |
| 12 | J0B–F258E–10 | SUPPORT, FRONT COWL | 1 | | | | | |
| 13 | 90105–08867 | BOLT, FLANGE | 2 | | | | | |
| 14 | J0B–F2127–00 | SHIM | 1 | | | | | |
| 15 | J1B–K816M–00 | SUPPORT, HOLDER | 2 | | | | | |
| 16 | 90105–088B6 | BOLT, FLANGE | 4 | | | | | |
| 17 | J0B–F258R–01 | PLATE, BATTERY 3 | 1 | | | | | |
| 18 | J0B–K8252–01 | PAD, SILENCER 2 | 1 | | | | | |
| 19 | 90105–08867 | BOLT, FLANGE | 2 | | | | | |
| 20 | J0B–K821A–00 | PAD, BODY MOUNTING1 | 2 | | | | | |
| 21 | J0B–F3123–10 | COVER, UNDER 1 | 1 | | | | | |
| 22 | J0B–K8256–00 | PAD, SILENCER 6 | 1 | | | | | |
| 23 | J0B–K8257–00 | PAD, SILENCER 7 | 1 | | | | | |
| 24 | J0B–K8258–00 | PAD, SILENCER 8 | 1 | | | | | |
| 25 | J0B–F3133–10 | COVER, UNDER 2 | 1 | | | | | |
| 26 | J0B–K8259–00 | PAD, SILENCER 9 | 1 | | | | | |
| 27 | J0B–K825A–00 | PAD, SILENCER 10 | 1 | | | | | |

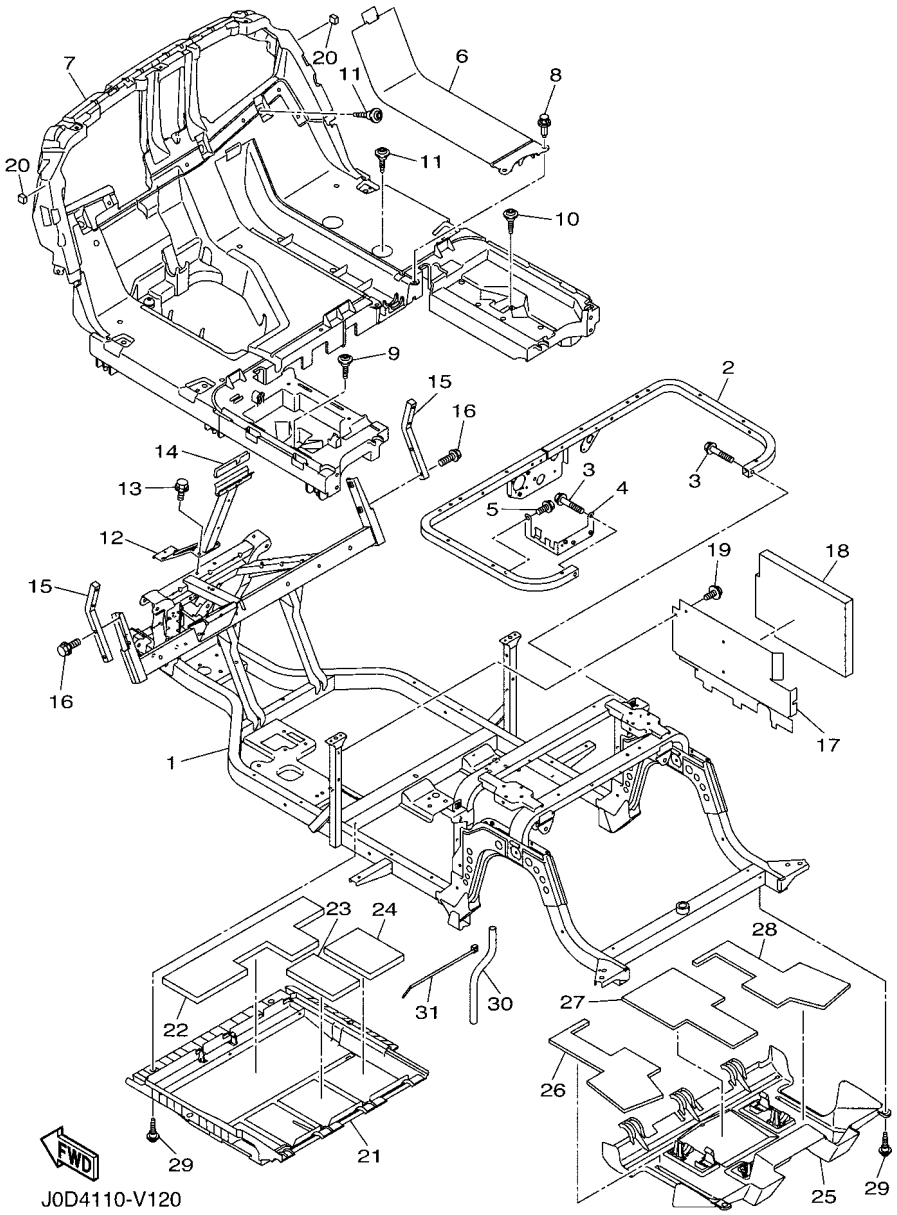


## FIG. 12 FRAME

| REF. NO. | PART NO. | DESCRIPTION | J0D5 | | | | | REMARKS |
|---|---|---|---|---|---|---|---|---|
| 28 | J0B–K825E–00 | PAD, SILENCER 11 | 1 | | | | | |
| 29 | J0B–F1738–00 | BOLT | 6 | | | | | |
| 30 | J0B–F125J–00 | PIPE, DRAIN | 2 | | | | | |
| 31 | 90464–76800 | CLAMP | 2 | | | | | |

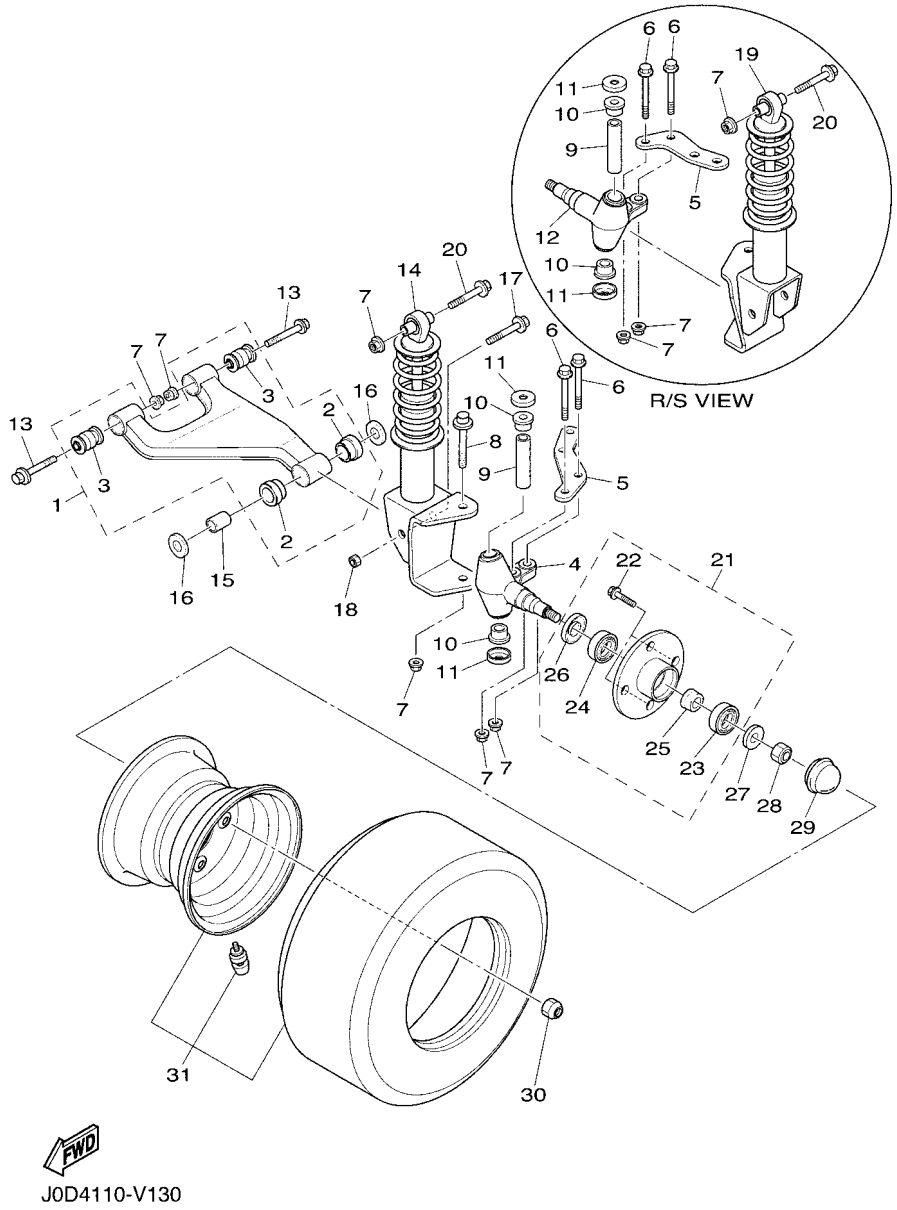


## FIG. 13 FRONT SUSPENSION & WHEEL

| REF. NO. | PART NO. | DESCRIPTION | J0D5 | | | | | REMARKS |
|---|---|---|---|---|---|---|---|---|
| 1 | J0B–F3570–10 | FRONT LOWER ARM COMP. (LEFT) | 2 | | | | | |
| 2 | 90381–18801 | .BUSH, SOLID | 2 | | | | | |
| 3 | 2HR–23526–00 | .BUSH | 2 | | | | | |
| 4 | JU0–F3511–20 | KNUCKLE, STEERING 1 | 1 | | | | | |
| 5 | JW1–F3512–00 | ARM, KNUCKLE 1 | 2 | | | | | |
| 6 | 90105–10373 | BOLT, FLANGE | 4 | | | | | |
| 7 | 95602–10200 | NUT, S/L FLANGE | 12 | | | | | |
| 8 | 90105–10219 | BOLT, FLANGE | 2 | | | | | |
| 9 | 2NL–23448–00 | SPACER | 2 | | | | | |
| 10 | 90381–17800 | BUSH, SOLID | 4 | | | | | |
| 11 | 2NL–23517–00 | COVER, THRUST 1 | 4 | | | | | |
| 12 | JU0–F3521–20 | KNUCKLE, STEERING 2 | 1 | | | | | |
| 13 | 90105–10267 | BOLT, FLANGE | 4 | | | | | |
| 14 | J0B–F3350–00 | SHOCK ABSORBER ASSY | 1 | | | | | |
| 15 | 90387–12016 | COLLAR | 2 | | | | | |
| 16 | 401–22128–01 | COVER, THRUST 1 | 4 | | | | | |
| 17 | 95812–12080 | BOLT, FLANGE | 2 | | | | | |
| 18 | 90185–12810 | NUT, SELF-LOCKING | 2 | | | | | |
| 19 | J0B–F3390–00 | SHOCK ABSORBER ASSY 2 | 1 | | | | | |
| 20 | 90105–10267 | BOLT, FLANGE | 2 | | | | | |
| 21 | JC1–F5103–00 | HUB BEARING UNIT ASSY | 2 | | | | | |
| 22 | 90114–12805 | .BOLT, SERRATION | 4 | | | | | |
| 23 | 93306–204X0 | .BEARING | 1 | | | | | |
| 24 | 93306–005Y3 | .BEARING | 1 | | | | | |
| 25 | 90387–241M7 | .COLLAR | 1 | | | | | |
| 26 | 93102–30083 | .OIL SEAL | 1 | | | | | |
| 27 | 90208–14801 | WASHER, CONICAL SPRING | 2 | | | | | |

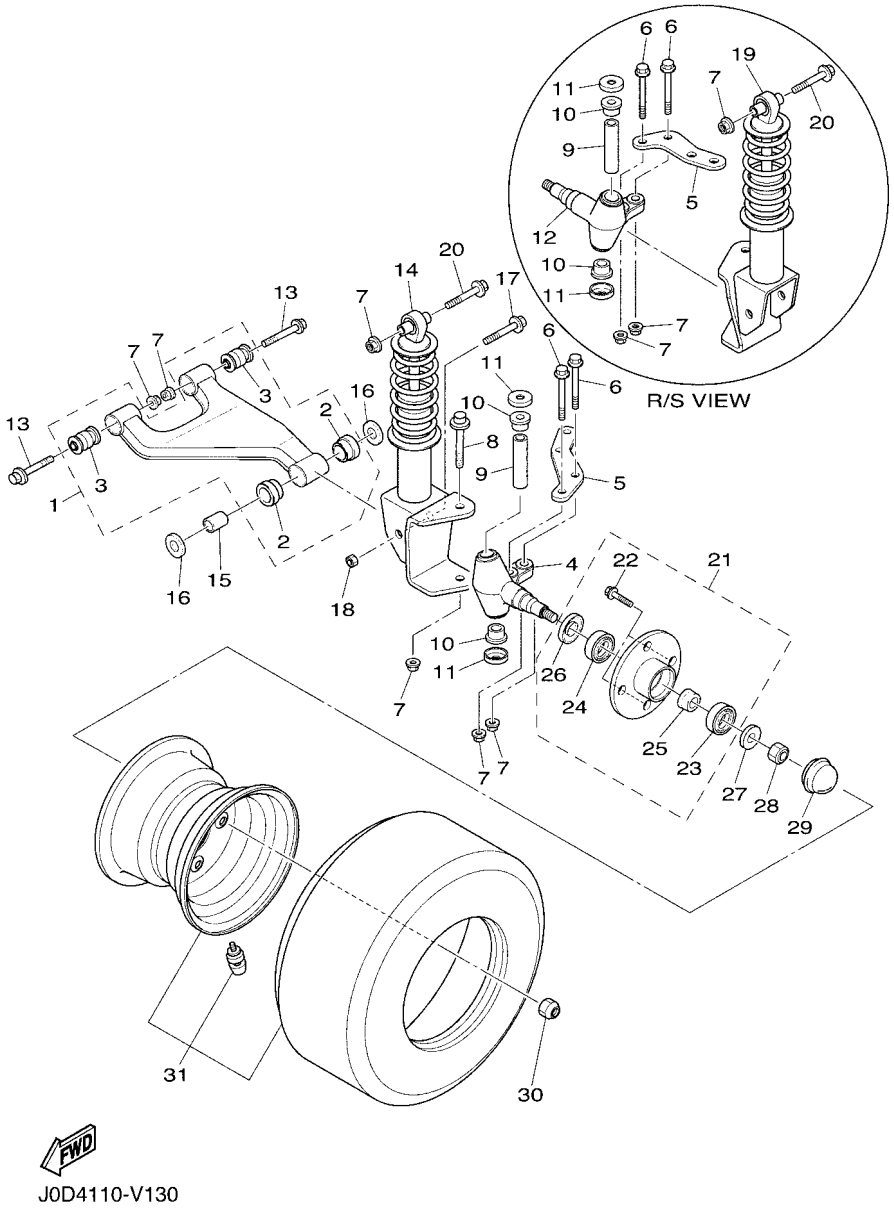


## FIG. 13 FRONT SUSPENSION & WHEEL

| REF. NO. | PART NO. | DESCRIPTION | J0D5 | | | | | REMARKS |
|---|---|---|---|---|---|---|---|---|
| 28 | 95602–14100 | NUT, U | 2 | | | | | |
| 29 | JN6–F5118–01 | COVER, HUB DUST | 2 | | | | | |
| 30 | 90179–12262 | NUT | 8 | | | | | |
| 31 | JC1–F5100–01 | WHEEL ASSY (205/65-10 4P) | 2 | | | | | |

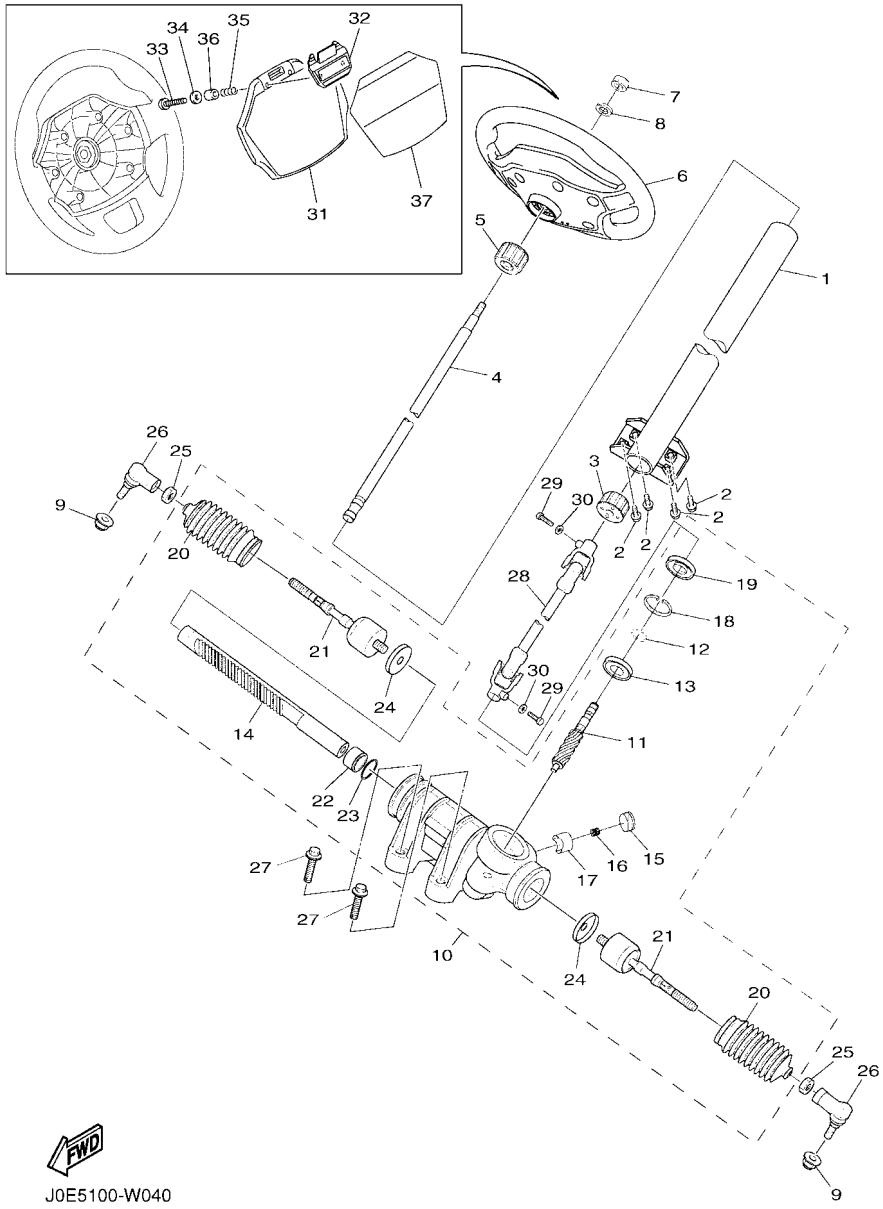


## FIG. 14 STEERING

| REF. NO. | PART NO. | DESCRIPTION | J0D5 | | | | | REMARKS |
|---|---|---|---|---|---|---|---|---|
| 1 | J0G–F3811–00 | COLUMN, STEERING | 1 | | | | | |
| 2 | 95812–08020 | BOLT, FLANGE | 4 | | | | | |
| 3 | JU0–F3857–20 | HOLDER | 1 | | | | | |
| 4 | JU0–F3828–10 | ROD, STEERING | 1 | | | | | |
| 5 | JU0–F3857–20 | HOLDER | 1 | | | | | |
| 6 | J0B–F3838–00 | WHEEL, STEERING | 1 | | | | | |
| 7 | 90185–12008 | NUT, SELF-LOCKING | 1 | | | | | |
| 8 | 92902–12200 | WASHER | 1 | | | | | |
| 9 | 90185–12811 | NUT, SELF-LOCKING | 2 | | | | | |
| 10 | JW1–F3400–01 | STEERING ASSY | 1 | | | | | |
| 11 | JW1–F387A–00 | .GEAR,PINION | 1 | | | | | |
| 12 | JW1–F3183–00 | .CIRCLIP | 1 | | | | | |
| 13 | JW1–F3812–00 | .BEARING, STEERING | 1 | | | | | |
| 14 | JW1–F387E–00 | .GEAR, RACK | 1 | | | | | |
| 15 | 5UG–F387G–00 | .COVER, ADJUST | 1 | | | | | |
| 16 | 5UG–F387K–00 | .SPRING, PRESSURE | 1 | | | | | |
| 17 | 5UG–F387F–00 | .PAD, PRESSURE | 1 | | | | | |
| 18 | 5UG–F387J–00 | .RING, STOPPER | 1 | | | | | |
| 19 | 5UG–F3844–00 | .SEAL | 1 | | | | | |
| 20 | 5UG–F3527–01 | .SEAL, DUST 1 | 2 | | | | | |
| 21 | JW1–F3837–00 | .ROD, TIE 2 | 2 | | | | | |
| 22 | JW1–F467K–00 | .BUSH, CAP | 1 | | | | | |
| 23 | JW1–F3866–00 | .CIRCLIP | 1 | | | | | |
| 24 | JW1–F3894–00 | .WASHER, LOCK 1 | 2 | | | | | |
| 25 | 1P0–F3833–00 | NUT 1 | 2 | | | | | |
| 26 | JW8–23841–01 | JOINT, UNIVERSAL 1 | 2 | | | | | |
| 27 | 90105–10847 | BOLT, FLANGE | 4 | | | | | |

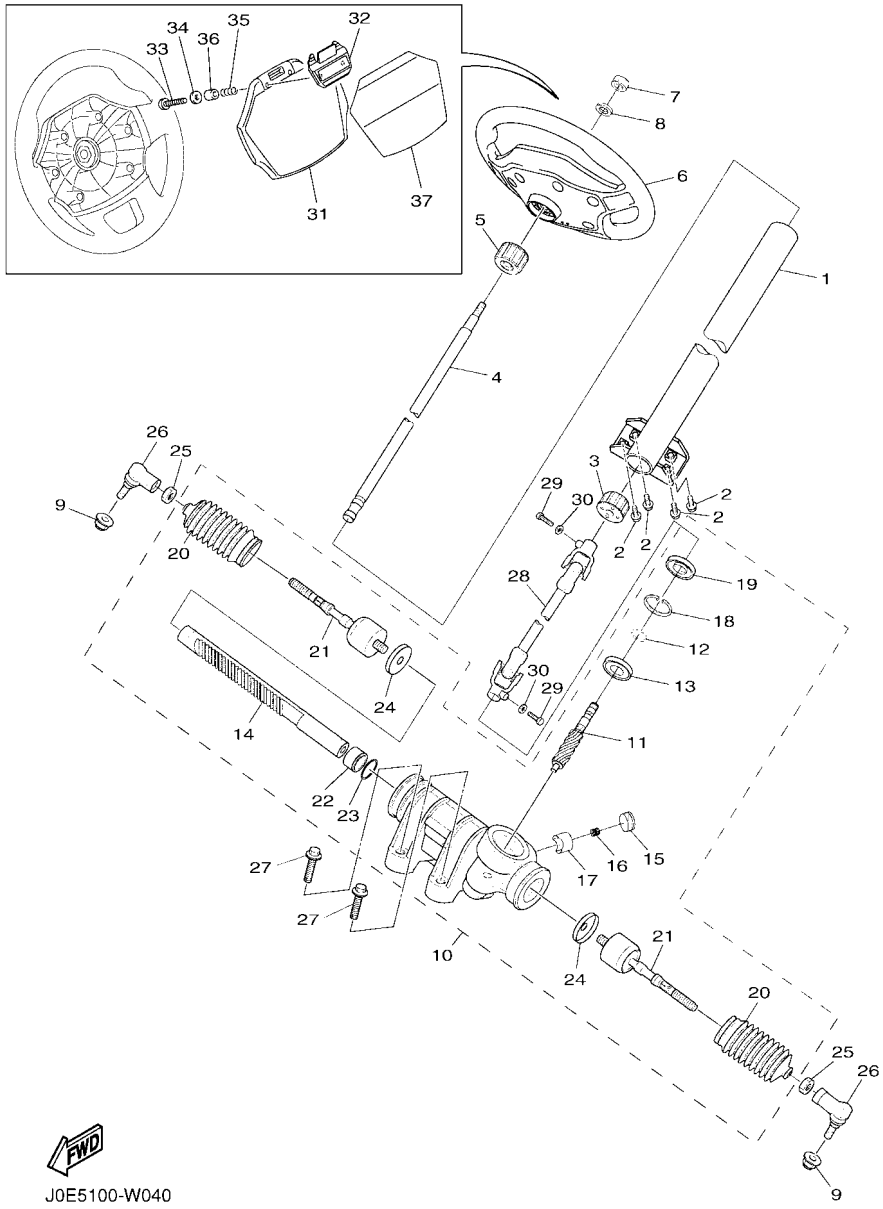


## FIG. 14 STEERING

| REF. NO. | PART NO. | DESCRIPTION | J0D5 | | | | | REMARKS |
|---|---|---|---|---|---|---|---|---|
| 28 | JW1–F3822–01 | JOINT 1 | 1 | | | | | |
| 29 | 97012–08030 | BOLT | 2 | | | | | |
| 30 | 92902–08600 | WASHER, PLATE | 2 | | | | | |
| 31 | J0D–K8357–00 | HOLDER 1 | 1 | | | | | |
| 32 | J0B–K8358–00 | HOLDER 2 | 1 | | | | | |
| 33 | J0B–K7387–00 | SCREW | 2 | | | | | |
| 34 | 90201–04810 | WASHER, PLATE | 2 | | | | | |
| 35 | J0B–K7363–00 | SPRING | 2 | | | | | |
| 36 | J0B–K7115–00 | COLLAR | 2 | | | | | |
| 37 | J0D–K7762–30 | LABEL, WARNING 2 | 1 | | | | | UR ENGLISH/FRENCH |
| | J0D–K7762–20 | LABEL, WARNING 2 | 1 | | | | | UR GERMAN/SPANISH |
| | J0D–K7762–40 | LABEL, WARNING 2 | 1 | | | | | UR PORTUGUESE/SPANISH |

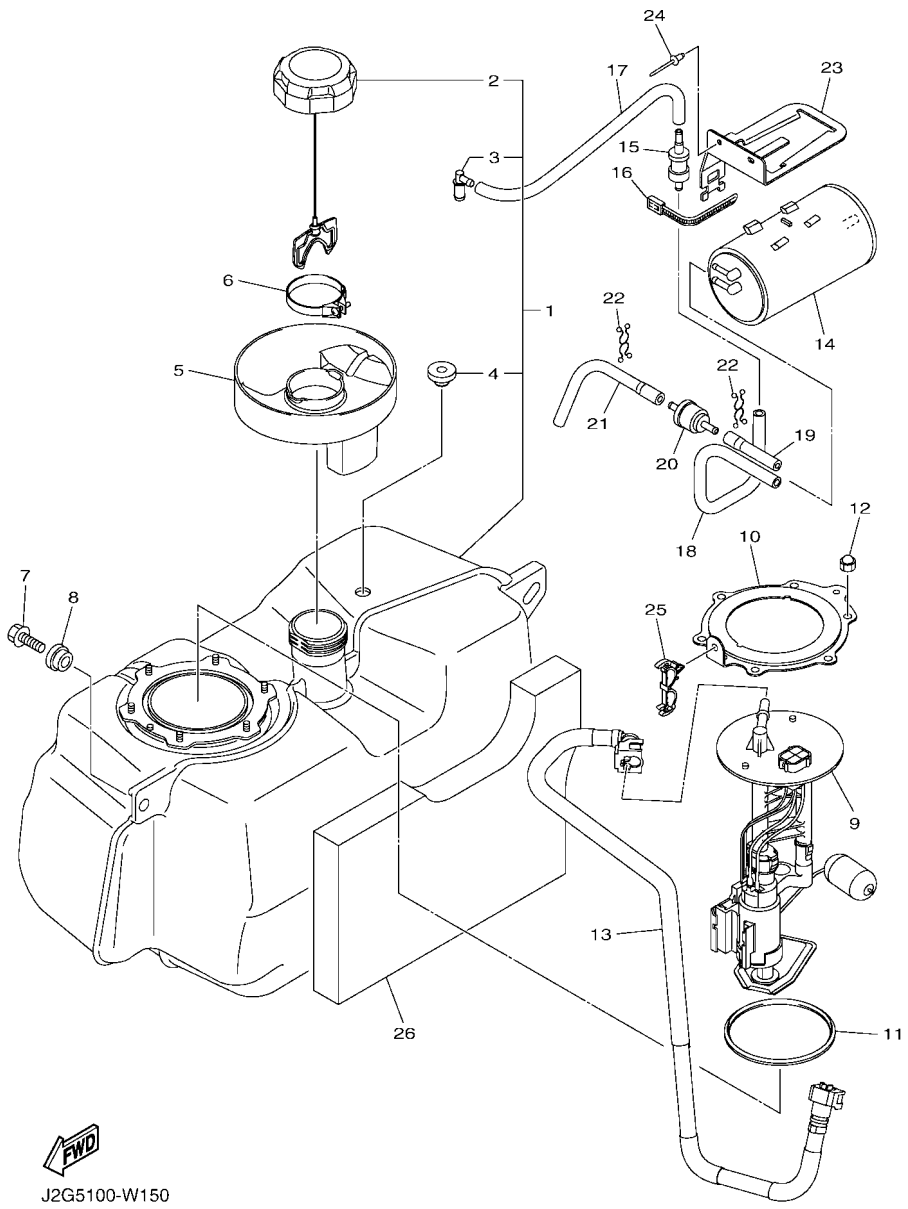


## FIG. 15 FUEL TANK

| REF. NO. | PART NO. | DESCRIPTION | J0D5 | | | | | REMARKS |
|---|---|---|---|---|---|---|---|---|
| 1 | JC0–F4111–02 | TANK, FUEL | 1 | | | | | |
| 2 | JW1–F4610–11 | .CAP ASSY | 1 | | | | | |
| 3 | JW1–F4112–00 | .PIPE | 1 | | | | | |
| 4 | JU5–F4375–00 | .GROMMET | 1 | | | | | |
| 5 | J0B–F4217–00 | COVER | 1 | | | | | |
| 6 | 90450–54008 | HOSE CLAMP ASSY | 1 | | | | | |
| 7 | JW1–F1738–00 | BOLT | 2 | | | | | |
| 8 | 90560–08251 | SPACER | 2 | | | | | |
| 9 | J0D–13907–01 | FUEL PUMP COMP. | 1 | | | | | |
| 10 | JC0–24491–00 | BRACKET, FUEL PUMP | 1 | | | | | |
| 11 | 1S3–24486–00 | O-RING | 1 | | | | | |
| 12 | 95302–06800 | NUT, CROWN | 6 | | | | | |
| 13 | J0D–13971–01 | PIPE, FUEL 1 | 1 | | | | | |
| 14 | 7CC–F4170–10 | CANISTER ASSY | 1 | | | | | |
| 15 | 4WM–24180–00 | ROLL OVER VALVE ASSY | 1 | | | | | |
| 16 | 90464–40825 | CLAMP | 1 | | | | | |
| 17 | J0B–F4314–00 | PIPE 4 | 1 | | | | | |
| 18 | J0B–F4316–00 | PIPE 6 | 1 | | | | | |
| 19 | J0B–F4313–00 | PIPE 3 | 1 | | | | | |
| 20 | BG4–24362–00 | VALVE, CHECK 1 | 1 | | | | | |
| 21 | J0B–F4317–10 | PIPE 7 | 1 | | | | | |
| 22 | 90464–14134 | CLAMP | 2 | | | | | |
| 23 | J0B–F419A–00 | HOLDER | 1 | | | | | |
| 24 | JW7–K7329–00 | RIVET | 2 | | | | | |
| 25 | 90464–18246 | CLAMP | 1 | | | | | |
| 26 | J0B–K8253–00 | PAD, SILENCER 3 | 1 | | | | | |

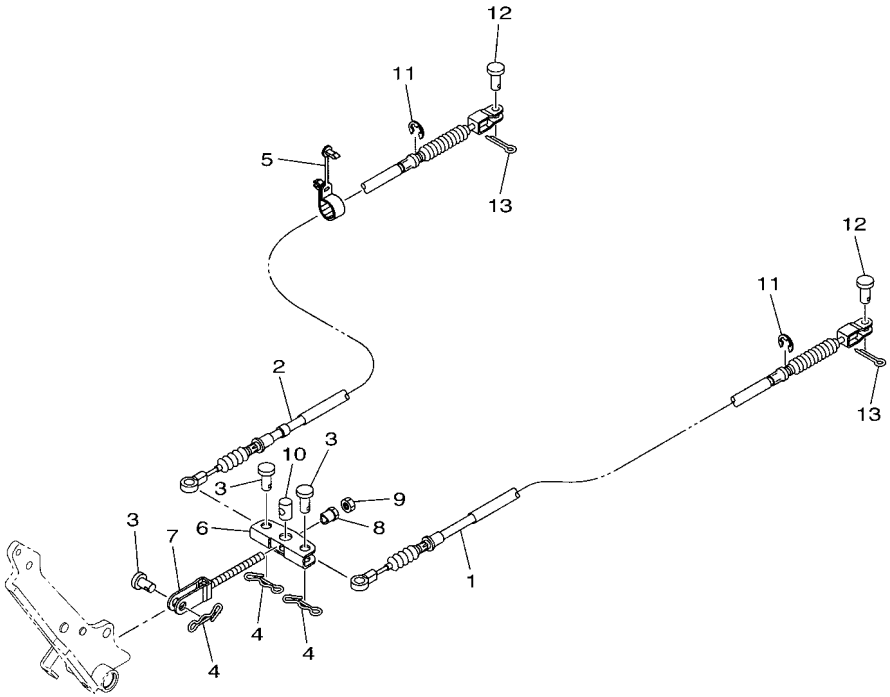


J0B1110-S150

## FIG. 16 PEDAL WIRE

| REF. NO. | PART NO. | DESCRIPTION | J0D5 | | | | | REMARKS |
|---|---|---|---|---|---|---|---|---|
| 1 | J0B–F6341–00 | WIRE, BRAKE 1 | 1 | | | | | |
| 2 | J0B–F6351–00 | CABLE, BRAKE | 1 | | | | | |
| 3 | 91702–10026 | PIN, CLEVIS | 3 | | | | | |
| 4 | 90468–20196 | CLIP | 3 | | | | | |
| 5 | JW7–F312H–00 | CLAMP | 5 | | | | | |
| 6 | JW8–F5681–10 | EQUALIZER, BRAKE | 1 | | | | | |
| 7 | JN6–F5685–01 | ROD | 1 | | | | | |
| 8 | 90179–08822 | NUT | 1 | | | | | |
| 9 | 95307–08700 | NUT | 1 | | | | | |
| 10 | 90249–14129 | PIN | 1 | | | | | |
| 11 | 99001–09600 | CIRCLIP | 2 | | | | | |
| 12 | 91702–08018 | PIN, CLEVIS | 2 | | | | | |
| 13 | 91490–25015 | PIN. COTTER | 2 | | | | | |

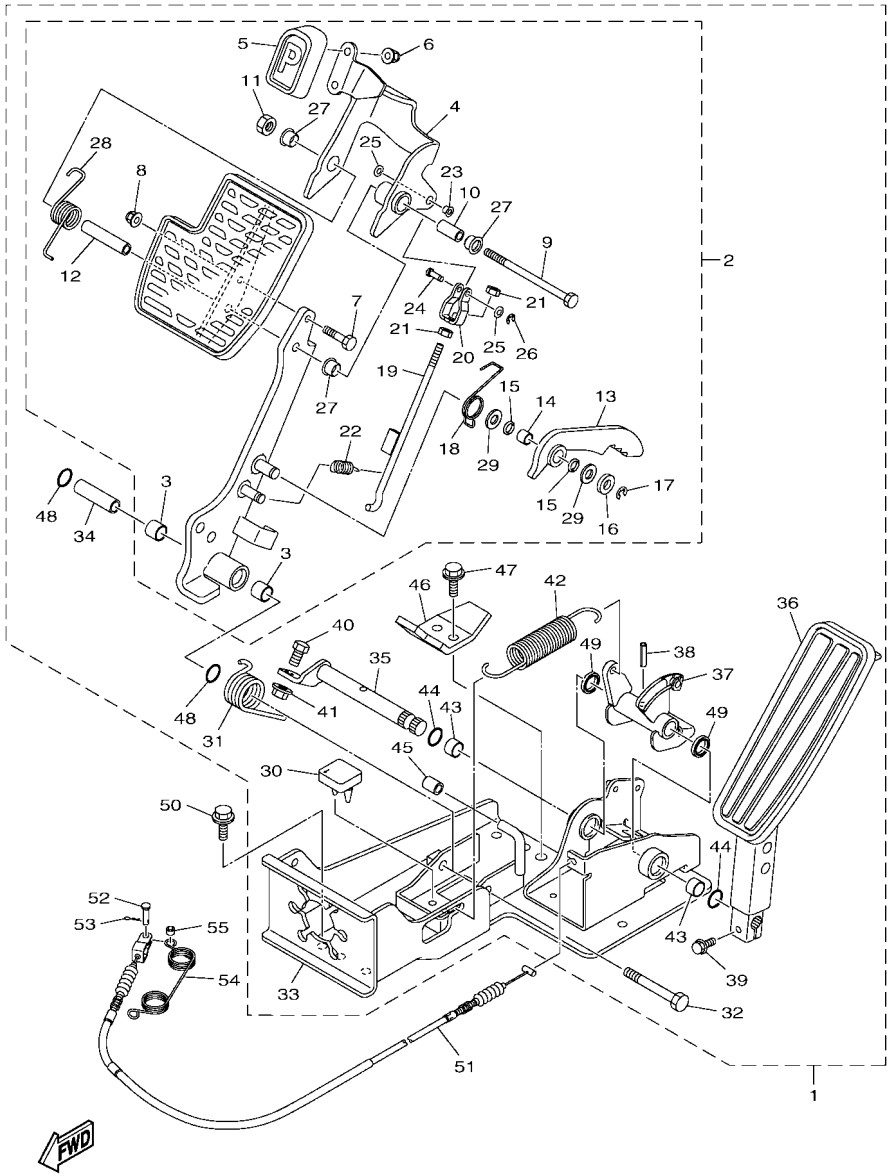


J0B5110-W170

## FIG. 17 PEDAL ASSEMBLY

| REF. NO. | PART NO. | DESCRIPTION | J0D5 | | | | | REMARKS |
|---|---|---|---|---|---|---|---|---|
| 1 | J0G–F7850–20 | PEDAL ASSY (L.H) | 1 | | | | | |
| 2 | J0G–F7200–02 | .PEDAL, BRAKE | 1 | | | | | |
| 3 | JW8–F7814–21 | ..BUSH, PEDAL | 2 | | | | | |
| 4 | J0G–F5671–00 | ..PEDAL, PARKING BRAKE | 1 | | | | | |
| 5 | J0G–F7854–00 | ..COVER, PEDAL | 1 | | | | | |
| 6 | 95607–06200 | ..NUT, SELF U-FLANGE | 2 | | | | | |
| 7 | 97012–06020 | ..BOLT | 1 | | | | | |
| 8 | JW8–F8363–00 | ..NUT | 1 | | | | | |
| 9 | J0G–F7416–00 | ..BOLT, FOOTREST | 1 | | | | | |
| 10 | JW8–F639N–00 | ..COLLAR | 1 | | | | | |
| 11 | J0G–F7218–00 | ..NUT | 1 | | | | | |
| 12 | J0G–F7313–00 | ..COLLAR | 1 | | | | | |
| 13 | JW9–F5666–00 | ..SECTOR, PARKING BRAKE | 1 | | | | | |
| 14 | JW8–F7121–00 | ..BUSH | 1 | | | | | |
| 15 | JW9–F7221–00 | ..SEAL, SHAFT | 2 | | | | | |
| 16 | JW8–F7322–00 | ..WASHER | 1 | | | | | |
| 17 | JW8–F3183–00 | ..CIRCLIP | 1 | | | | | |
| 18 | JW8–F7426–01 | ..SPRING, RETURN | 1 | | | | | |
| 19 | JW9–F7231–10 | ..ROD, BRAKE | 1 | | | | | |
| 20 | JW9–F7232–00 | ..END, ROD 2 | 1 | | | | | |
| 21 | JW8–F7318–00 | ..NUT | 2 | | | | | |
| 22 | JW8–F6314–00 | ..SPRING | 1 | | | | | |
| 23 | J0G–F7814–00 | ..BUSH, PEDAL | 1 | | | | | |
| 24 | JW9–F7228–00 | ..PIN, JOINT | 1 | | | | | |
| 25 | JW8–F8323–00 | ..WASHER, LEG SHIELD | 2 | | | | | |
| 26 | JW8–F5415–00 | ..CIRCLIP | 1 | | | | | |
| 27 | 90386–12800 | ..BUSH | 3 | | | | | |

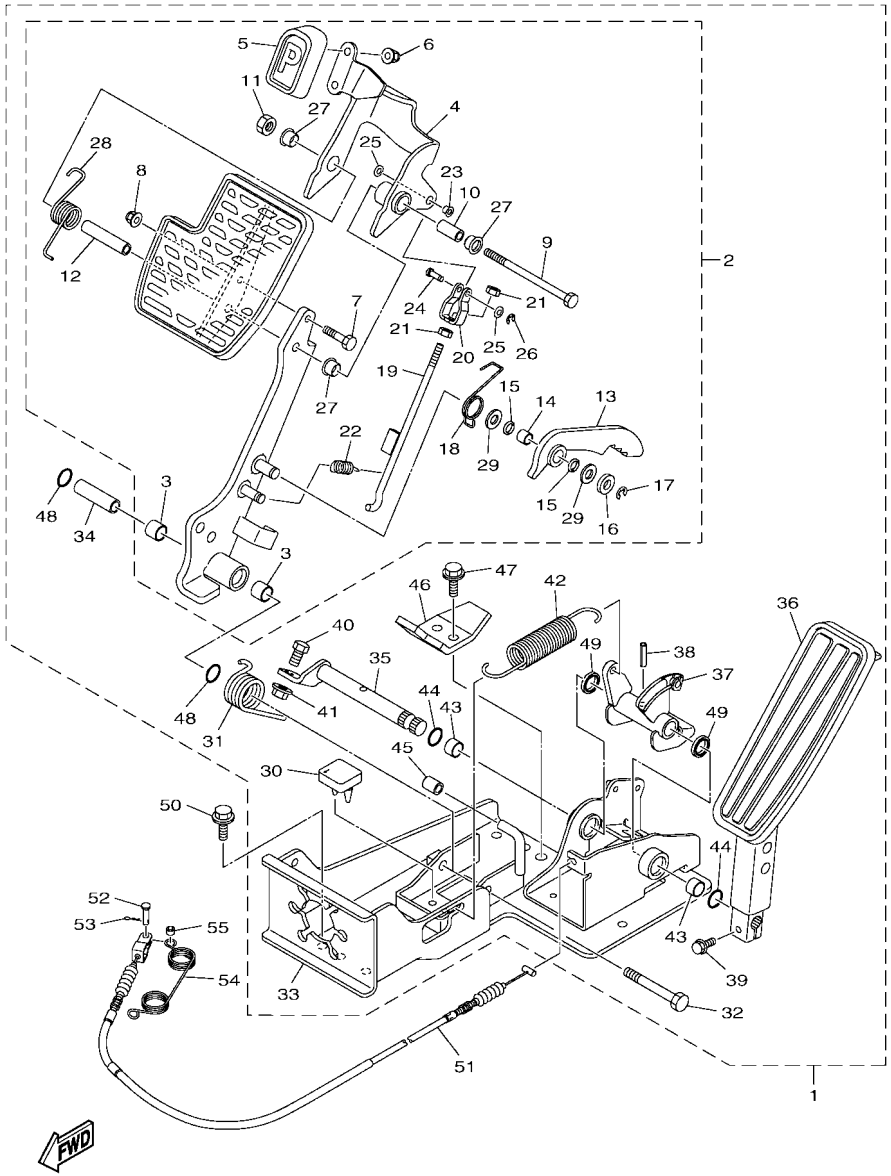


J0B5110-W170

## FIG. 17 PEDAL ASSEMBLY

| REF. NO. | PART NO. | DESCRIPTION | J0D5 | | | | | REMARKS |
|---|---|---|---|---|---|---|---|---|
| 28 | J0G–F7825–00 | ..SPRING, RETURN | 1 | | | | | |
| 29 | JW8–F7119–00 | ..WASHER | 2 | | | | | |
| 30 | JW9–F7245–10 | .PAD, BRAKE PEDAL | 1 | | | | | |
| 31 | JW8–F7316–01 | .SPRING, SIDE STAND | 1 | | | | | |
| 32 | JW8–F7217–00 | .BOLT | 1 | | | | | |
| 33 | J0G–F7445–10 | .PLATE 1 | 1 | | | | | |
| 34 | JW8–F7213–20 | .COLLAR | 1 | | | | | |
| 35 | J0G–F7853–10 | .SHAFT, PEDAL 1 | 1 | | | | | |
| 36 | J0G–F7871–01 | .PEDAL, ACCELERATOR | 1 | | | | | |
| 37 | J0G–F7872–00 | .ARM, ACCELERATOR PEDAL | 1 | | | | | |
| 38 | JW8–F7438–00 | .PIN, CLEVIS | 1 | | | | | |
| 39 | JW8–F7434–00 | .BOLT | 1 | | | | | |
| 40 | JW8–F7317–00 | .BOLT | 1 | | | | | |
| 41 | JW8–F7118–00 | .NUT | 1 | | | | | |
| 42 | J0G–F815H–10 | .SPRING | 1 | | | | | |
| 43 | J0G–F5922–00 | .WASHER | 2 | | | | | |
| 44 | JW8–F4486–00 | .O-RING | 2 | | | | | |
| 45 | JW9–F5673–00 | .DAMPER, BRAKE | 1 | | | | | |
| 46 | JW9–F7246–20 | .NAIL, BRAKE | 1 | | | | | |
| 47 | JW8–F8331–00 | .BOLT, LEG SHIELD | 2 | | | | | |
| 48 | JW8–F4486–00 | .O-RING | 2 | | | | | |
| 49 | J0G–F3145–00 | .OIL SEAL | 2 | | | | | |
| 50 | 95812–08020 | BOLT, FLANGE | 6 | | | | | |
| 51 | J0B–F6311–01 | WIRE, THROTTLE 1 | 1 | | | | | |
| 52 | 91702–05014 | PIN, CLEVIS | 1 | | | | | |
| 53 | 90468–10049 | CLIP | 1 | | | | | |
| 54 | 90508–16460 | SPRING, TORSION | 1 | | | | | |

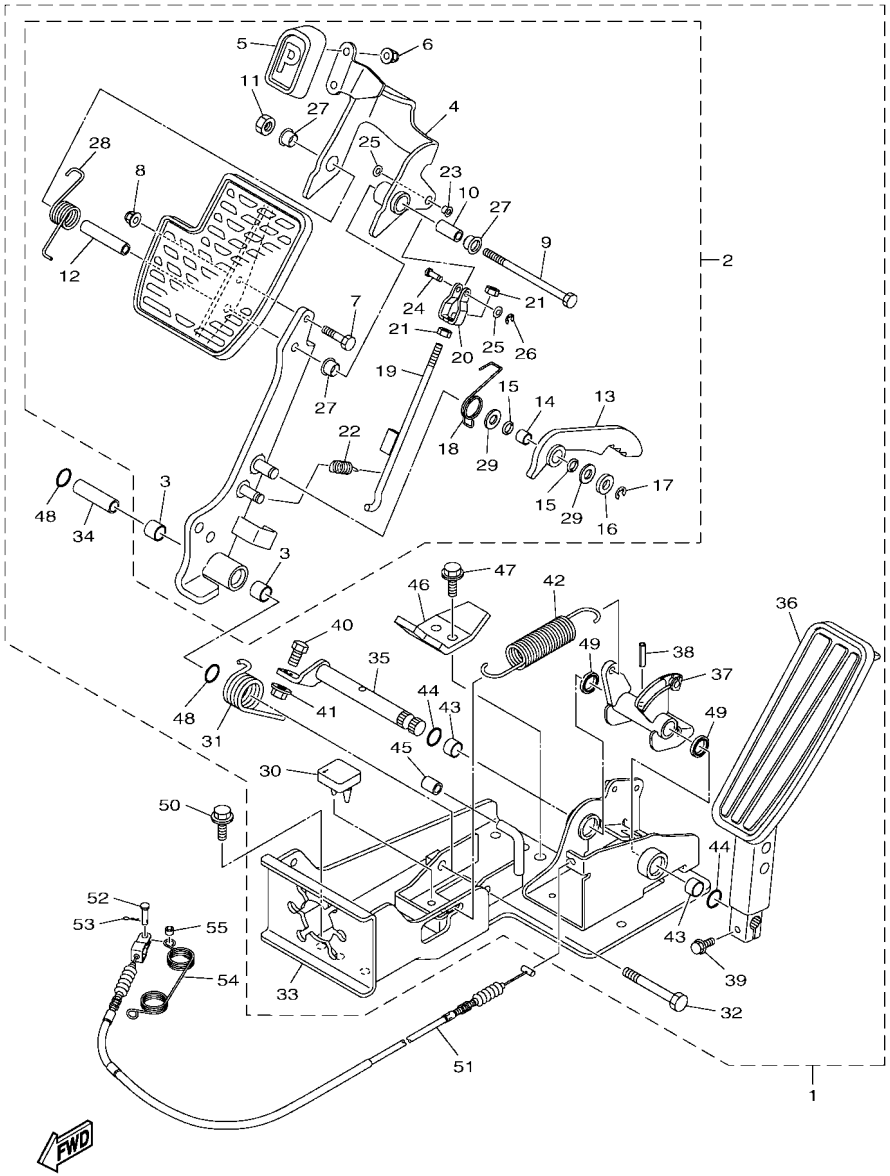


J0B5110-W170

## FIG. 17 PEDAL ASSEMBLY

| REF. NO. | PART NO. | DESCRIPTION | J0D5 | | | | | REMARKS |
|---|---|---|---|---|---|---|---|---|
| 55 | 90560–05001 | SPACER | 1 | | | | | |

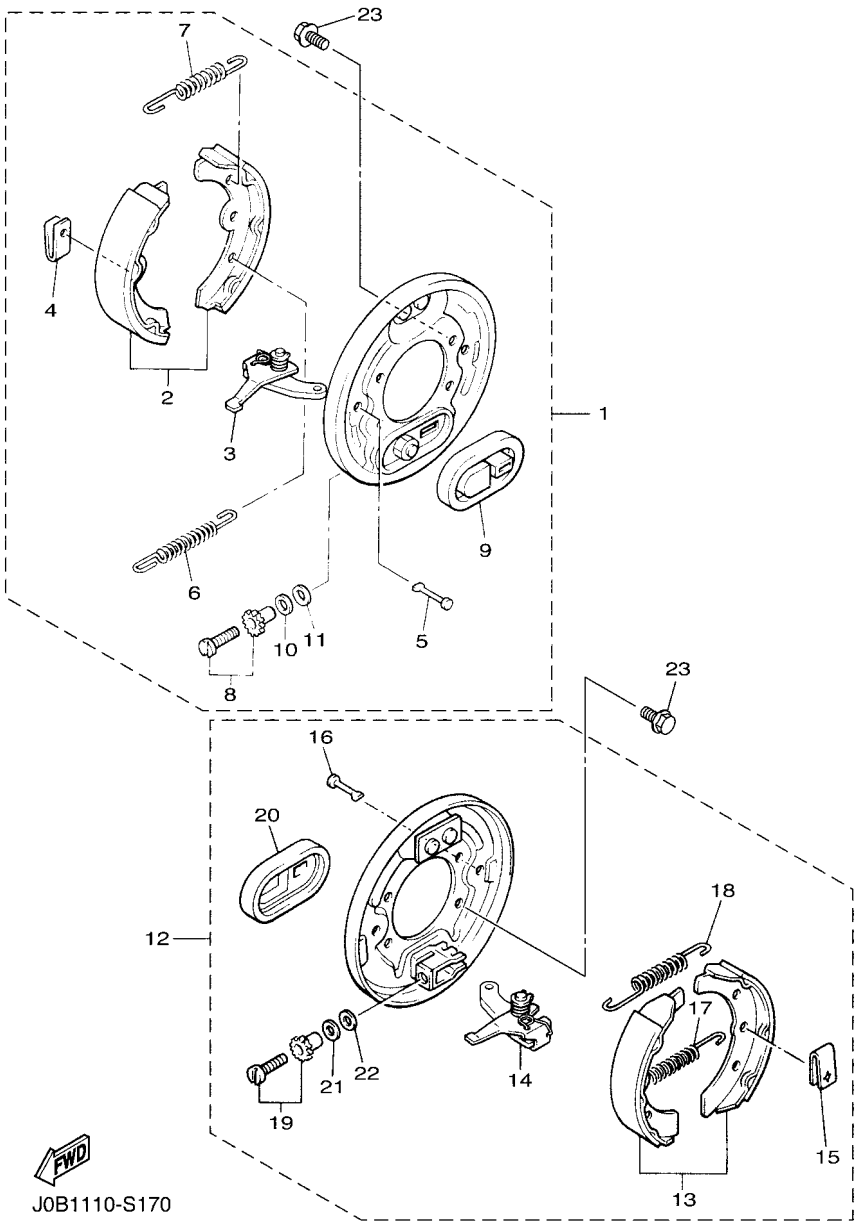


## FIG. 18 BRAKE

| REF. NO. | PART NO. | DESCRIPTION | J0D5 | | | | | REMARKS |
|---|---|---|---|---|---|---|---|---|
| 1 | JW8–F7280–10 | BACKING PLATE ASSY 1 | 1 | | | | | |
| 2 | JN9–W2536–11 | .BRAKE SHOE SET | 1 | | | | | |
| 3 | J38–27204–00 | .LEVER ASSY 1 | 1 | | | | | |
| 4 | JW8–F7281–00 | .SPRING, SHOE CLAMP | 2 | | | | | |
| 5 | J10–27282–00 | .PIN, SHOE HOLD DOWN | 2 | | | | | |
| 6 | 90506–20281 | .SPRING, TENSION | 1 | | | | | |
| 7 | 90506–14001 | .SPRING, TENSION | 1 | | | | | |
| 8 | J55–27270–00 | .ADJUSTER ASSY | 1 | | | | | |
| 9 | JW8–F7286–00 | .COVER, DUST | 1 | | | | | |
| 10 | 90201–121H9 | .WASHER, PLATE | 1 | | | | | |
| 11 | 90201–121H8 | .WASHER, PLATE | 1 | | | | | |
| 12 | JW8–F7290–10 | BACKING PLATE ASSY 2 | 1 | | | | | |
| 13 | JN9–W2536–11 | .BRAKE SHOE SET | 1 | | | | | |
| 14 | J38–27205–00 | .LEVER ASSY 2 | 1 | | | | | |
| 15 | JW8–F7281–00 | .SPRING, SHOE CLAMP | 2 | | | | | |
| 16 | J10–27282–00 | .PIN, SHOE HOLD DOWN | 2 | | | | | |
| 17 | 90506–20281 | .SPRING, TENSION | 1 | | | | | |
| 18 | 90506–14001 | .SPRING, TENSION | 1 | | | | | |
| 19 | J55–27260–00 | .ADJUSTER ASSY | 1 | | | | | |
| 20 | JW8–F7286–00 | .COVER, DUST | 1 | | | | | |
| 21 | 90201–121H9 | .WASHER, PLATE | 1 | | | | | |
| 22 | 90201–121H8 | .WASHER, PLATE | 1 | | | | | |
| 23 | 90105–082A0 | BOLT, FLANGE | 8 | | | | | |

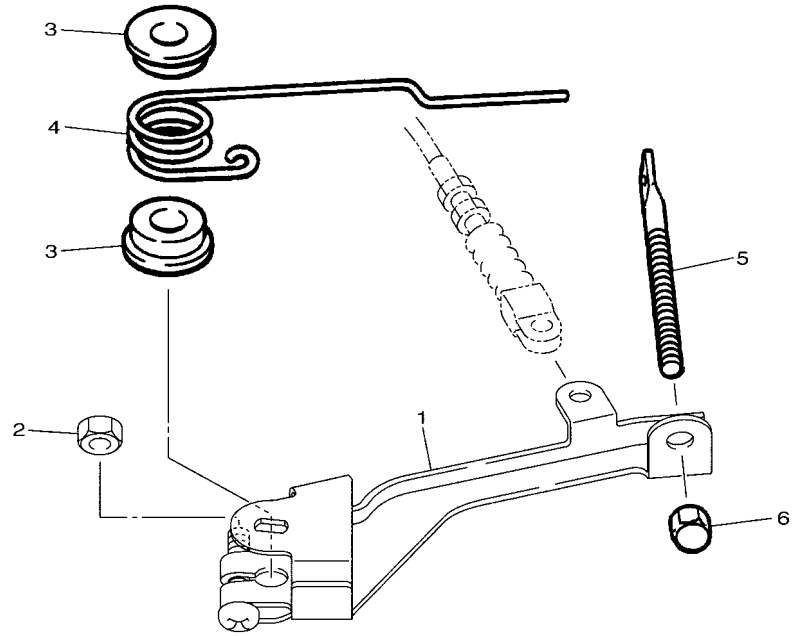

J0B1110-S180

## FIG. 19 GOVERNOR

| REF. NO. | PART NO. | DESCRIPTION | J0D5 | | | | | REMARKS |
|---|---|---|---|---|---|---|---|---|
| 1 | J0B–27951–00 | LEVER, SPEED LIMITER | 1 | | | | | |
| 2 | 95302–06600 | NUT, HEXAGON | 1 | | | | | |
| 3 | 90386–08141 | BUSH | 2 | | | | | |
| 4 | 90508–40678 | SPRING, TORSION | 1 | | | | | |
| 5 | J38–27959–00 | SCREW, ADJUSTING | 1 | | | | | |
| 6 | 95602–06200 | NUT, SELF-LOCKING | 1 | | | | | |

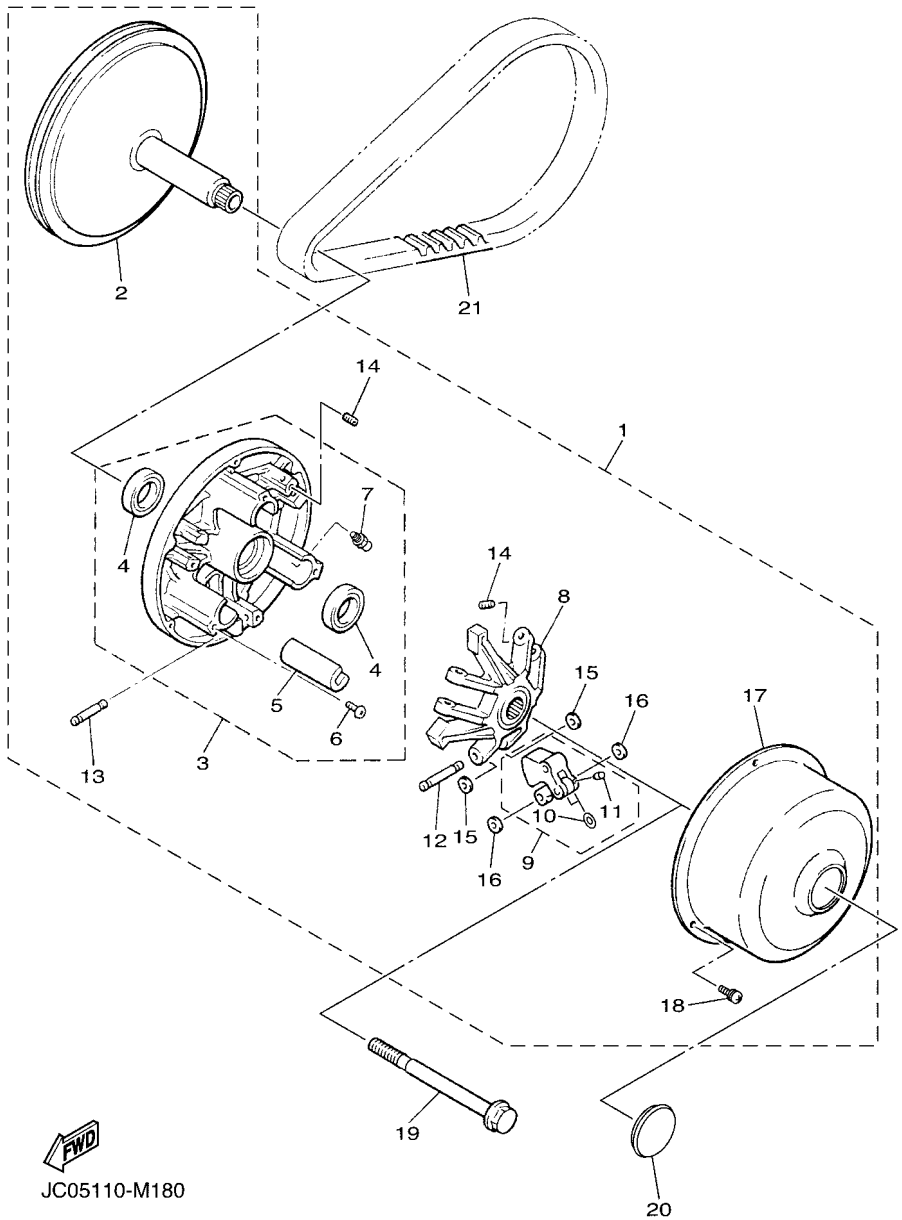


## FIG. 20 PRIMARY SHEAVE

| REF. NO. | PART NO. | DESCRIPTION | J0D5 | | | | | REMARKS |
|---|---|---|---|---|---|---|---|---|
| 1 | J0B–G6201–01 | PRIMARY CLUTCH ASSY | 1 | | | | | |
| 2 | JW8–G6210–01 | .PRIMARY FIXED SHEAVE COMP. | 1 | | | | | |
| 3 | J0B–G6220–01 | .PRIMARY SLIDING SHEAVE COMP. | 1 | | | | | |
| 4 | JW8–G624A–00 | ..OIL SEAL 1 | 2 | | | | | |
| 5 | JW8–G6253–00 | ..SLIDER | 3 | | | | | |
| 6 | JW8–G4189–00 | ..SCREW | 3 | | | | | |
| 7 | JW8–F135J–00 | ..NIPPLE | 1 | | | | | |
| 8 | JW8–G6251–21 | .SPIDER | 1 | | | | | |
| 9 | JW8–G6205–22 | .WEIGHT LINK ASSY | 3 | | | | | |
| 10 | JW8–G5618–00 | ..WASHER, 1 | 2 | | | | | |
| 11 | 90113–04803 | ..BOLT, SET | 2 | | | | | |
| 12 | JW8–G6236–20 | .PIN, WEIGHT | 3 | | | | | |
| 13 | JW8–G6237–20 | .PIN, WEIGHT 2 | 3 | | | | | |
| 14 | 90113–04803 | .BOLT, SET | 6 | | | | | |
| 15 | JW8–G5618–00 | .WASHER, 1 | 6 | | | | | |
| 16 | JW8–G5621–00 | .WASHER, 2 | 6 | | | | | |
| 17 | J0B–G6231–00 | .CAP | 1 | | | | | |
| 18 | JW8–G5282–00 | .SCREW | 3 | | | | | |
| 19 | JW8–G6249–00 | BOLT | 1 | | | | | |
| 20 | JW8–G7339–00 | PLUG | 1 | | | | | |
| 21 | J0D–G6241–01 | BELT | 1 | | | | | |

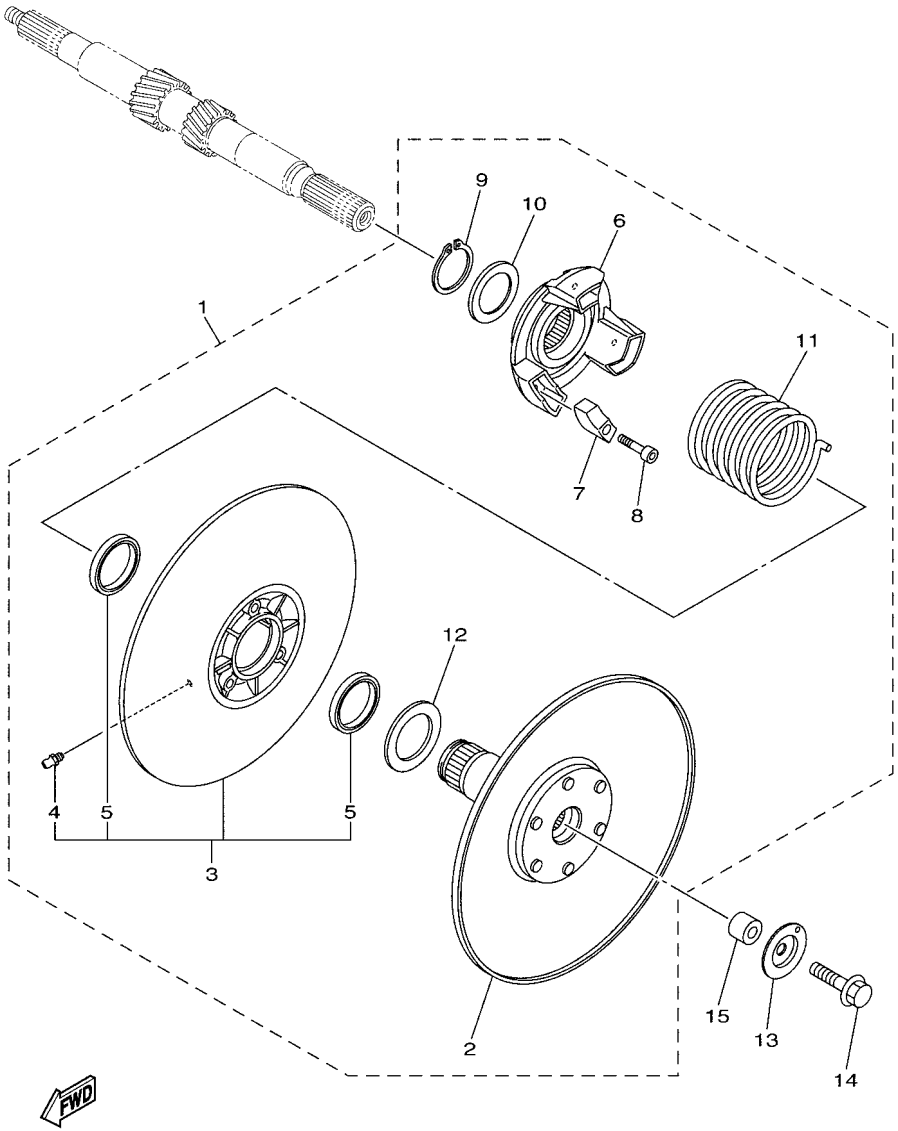


J0D2100-T210

## FIG. 21 SECONDARY SHEAVE

| REF. NO. | PART NO. | DESCRIPTION | J0D5 | | | | | REMARKS |
|---|---|---|---|---|---|---|---|---|
| 1 | JW8–G6202–24 | SECONDARY SHEAVE ASSY | 1 | | | | | |
| 2 | JW8–G6260–23 | .SECONDARY FIXED SHEAVE COMP. | 1 | | | | | |
| 3 | JW8–G6270–21 | .SECONDARY SLIDING SHEAVE COMP. | 1 | | | | | |
| 4 | JW8–F135J–00 | ..NIPPLE | 1 | | | | | |
| 5 | JW8–G624B–00 | ..OIL SEAL 2 | 2 | | | | | |
| 6 | JW8–G6284–10 | .SEAT, SECONDARY SPRING | 1 | | | | | |
| 7 | JW8–E7688–01 | .SHOE, RAMP | 3 | | | | | |
| 8 | JW8–G6159–00 | .BOLT 3 | 3 | | | | | |
| 9 | JW8–G5531–00 | .CLIP, DRIVE SHAFT | 1 | | | | | |
| 10 | JW8–G6374–00 | .COLLAR, SPRING | 1 | | | | | |
| 11 | JW8–G6275–10 | .SPRING, CLUTCH 1 | 1 | | | | | |
| 12 | JW8–G5677–00 | .WASHER | 1 | | | | | |
| 13 | 90209–08013 | WASHER | 1 | | | | | |
| 14 | 90105–08260 | BOLT, FLANGE | 1 | | | | | |
| 15 | JW8–G5697–20 | COLLAR | 1 | | | | | |

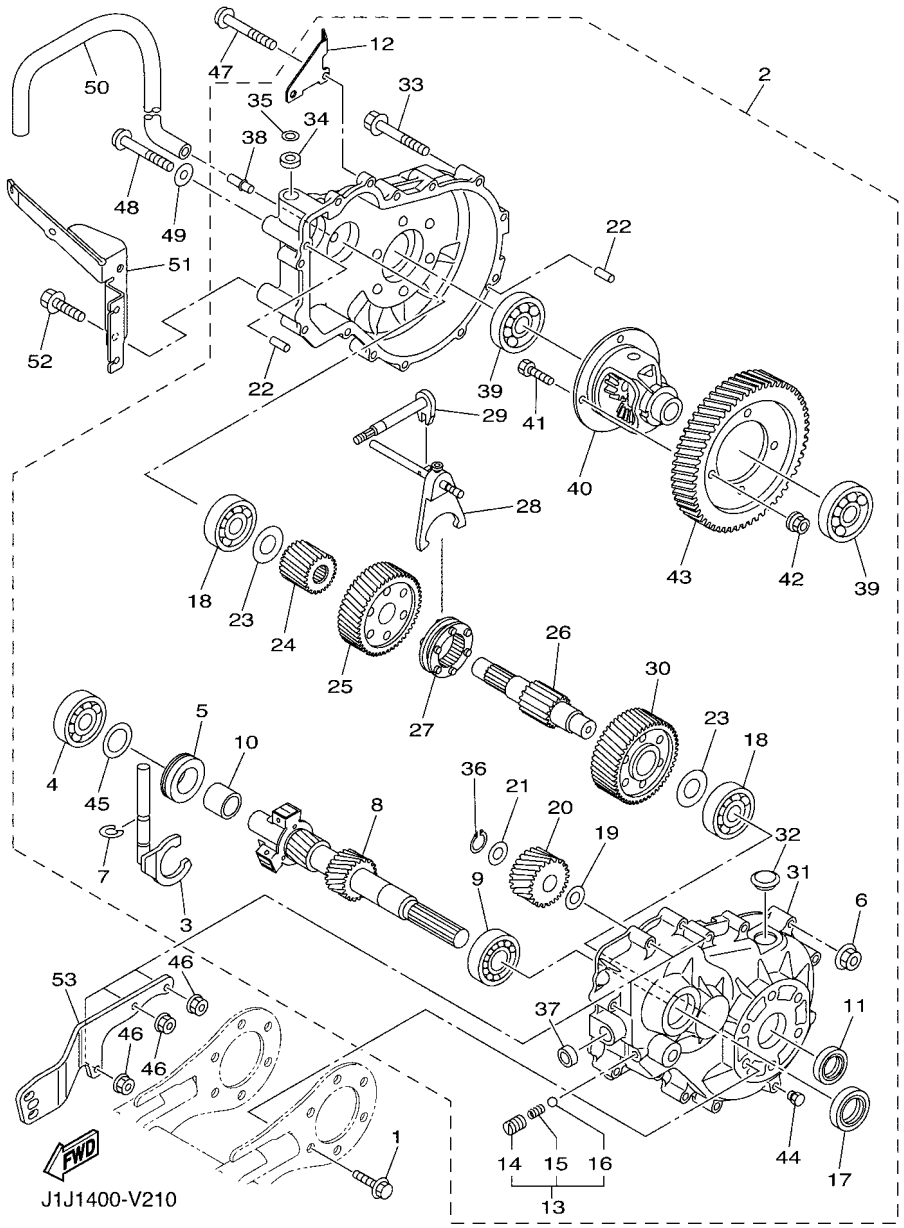


## FIG. 22 TRANSMISSION

| REF. NO. | PART NO. | DESCRIPTION | J0D5 | | | | | REMARKS |
|---|---|---|---|---|---|---|---|---|
| 1 | 95812–10020 | BOLT, FLANGE | 6 | | | | | |
| 2 | J0D–G6301–01 | TRANSMISSION ASSY | 1 | | | | | |
| 3 | J0B–G633E–00 | .BAR 1 | 1 | | | | | |
| 4 | 93306–303Y6 | .BEARING | 1 | | | | | |
| 5 | JW8–E1923–00 | .SLEEVE, GOVERNOR | 1 | | | | | |
| 6 | J0B–G2391–00 | .NUT 1 | 13 | | | | | |
| 7 | JU0–F722H–00 | .RETAINER | 1 | | | | | |
| 8 | J0D–G6320–00 | .INPUT SHAFT ASSY | 1 | | | | | |
| 9 | J0B–G6164–00 | .BEARING 1 | 1 | | | | | |
| 10 | J0B–G3127–00 | .COLLAR | 1 | | | | | |
| 11 | J0B–G3812–00 | .SEAL, DUST | 2 | | | | | |
| 12 | J0B–G6555–00 | .BRACKET 2 | 1 | | | | | |
| 13 | JU0–G6376–00 | .SPRING SET | 1 | | | | | |
| 14 | 90113–08803 | ..BOLT, SET | 1 | | | | | |
| 15 | 90501–10852 | ..SPRING, COMPRESSION | 1 | | | | | |
| 16 | 93500–06826 | ..BALL | 1 | | | | | |
| 17 | 93102–25868 | .OIL SEAL | 1 | | | | | |
| 18 | J0B–G580H–00 | .BEARING ASSY | 2 | | | | | |
| 19 | 90201–208H9 | .WASHER, PLATE | 1 | | | | | |
| 20 | J0B–G6356–00 | .GEAR, IDLER | 1 | | | | | |
| 21 | 90201–208J0 | .WASHER, PLATE | 1 | | | | | |
| 22 | 93606–10842 | .PIN, DOWEL | 2 | | | | | |
| 23 | J0B–G1297–00 | .WASHER, 1 | 2 | | | | | |
| 24 | J0B–G6316–00 | .GEAR, PINION 1 | 1 | | | | | |
| 25 | J0B–G6326–00 | .GEAR, WHEEL 1 | 1 | | | | | |
| 26 | J0B–G633G–00 | .SHAFT | 1 | | | | | |
| 27 | J0B–G6153–00 | .COLLAR, GUIDE | 1 | | | | | |

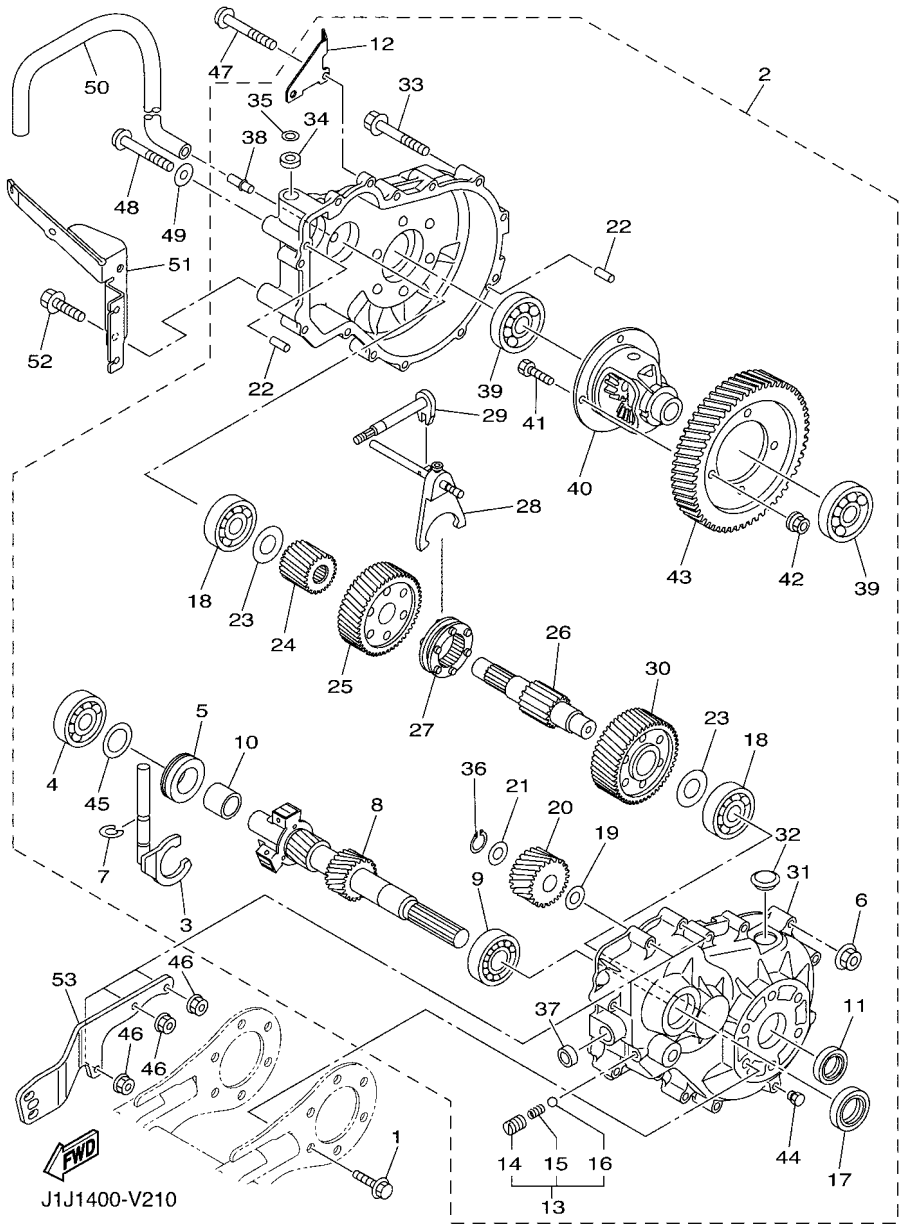


## FIG. 22 TRANSMISSION

| REF. NO. | PART NO. | DESCRIPTION | J0D5 | | | | | REMARKS |
|---|---|---|---|---|---|---|---|---|
| 28 | J0B–G638E–00 | .BAR, SHIFT 2 | 1 | | | | | |
| 29 | J0B–G638A–00 | .BAR, SHIFT 1 | 1 | | | | | |
| 30 | J0D–G6327–00 | .GEAR, WHEEL 2 | 1 | | | | | |
| 31 | J0B–G6314–00 | .COVER, TRANSMISSION | 1 | | | | | |
| 32 | JN3–G6432–00 | .STOPPER | 1 | | | | | |
| 33 | J0B–G1148–00 | .BOLT | 13 | | | | | |
| 34 | 93109–10820 | .OIL SEAL | 1 | | | | | |
| 35 | JU0–F723F–00 | .WASHER, SPECIAL | 1 | | | | | |
| 36 | JW8–F47E3–00 | .CIRCLIP | 1 | | | | | |
| 37 | 93104–11829 | .OIL SEAL | 1 | | | | | |
| 38 | JW8–G5378–00 | .NIPPLE, HOSE | 1 | | | | | |
| 39 | 93306–007Y0 | .BEARING | 2 | | | | | |
| 40 | J0B–G6410–00 | .DIFFERENTIAL ASSY. | 1 | | | | | |
| 41 | JC1–G2544–00 | .BOLT | 4 | | | | | |
| 42 | 90170–10840 | .NUT | 4 | | | | | |
| 43 | J0B–G6355–00 | .GEAR, PRIMARY | 1 | | | | | |
| 44 | J0B–G5148–00 | .PLUG, DRAIN | 1 | | | | | |
| 45 | JN3–G6344–00 | .SHIM, 0.76MM (0.030IN) | 1 | | | | | |
| 46 | 95604–06200 | NUT, U FLANGE | 3 | | | | | |
| 47 | 90110–06363 | BOLT, HEXAGON SOCKET HEAD | 2 | | | | | |
| 48 | 90110–06364 | BOLT, HEXAGON SOCKET HEAD | 1 | | | | | |
| 49 | 90201–06089 | WASHER, PLATE | 1 | | | | | |
| 50 | JW8–G2541–00 | PIPE 1 | 1 | | | | | |
| 51 | J0B–G6556–00 | BRACKET 3 | 1 | | | | | |
| 52 | 90105–08867 | BOLT, FLANGE | 2 | | | | | |
| 53 | J0B–F2574–00 | STIFFENER | 1 | | | | | |

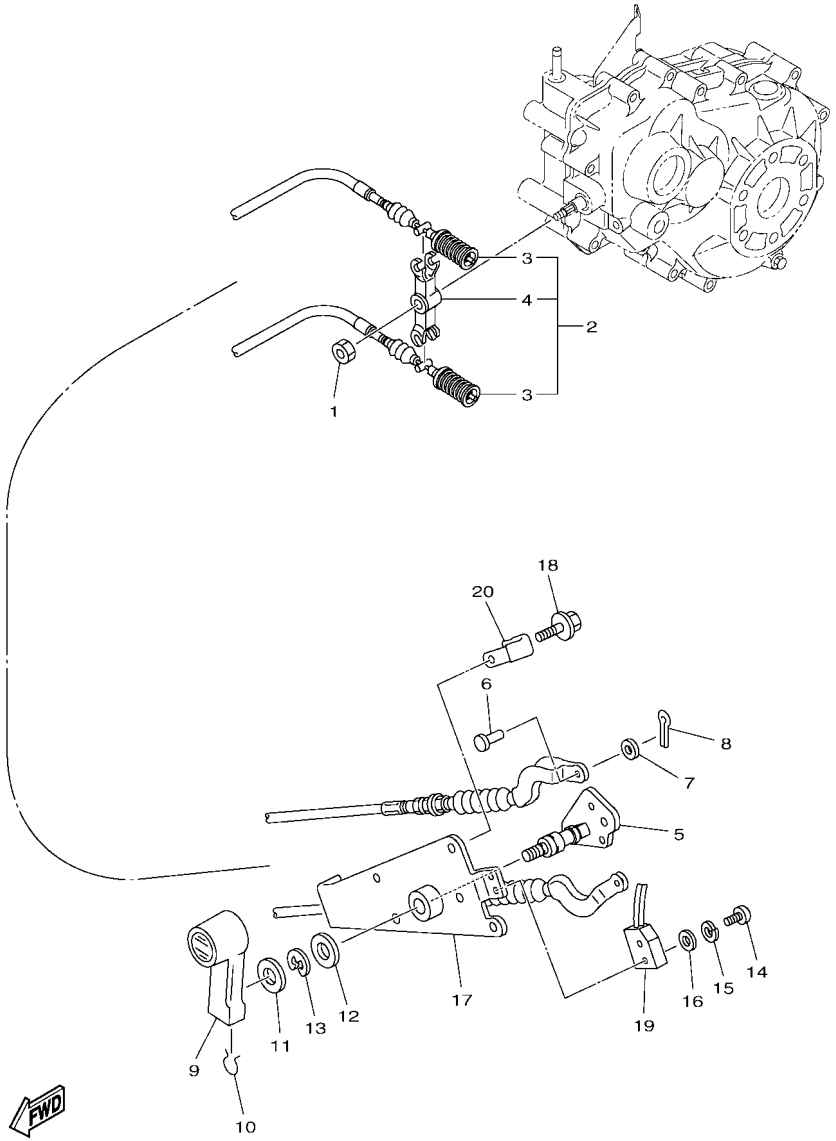


J0B5110-W230

## FIG. 23 SHIFTER & CABLES

| REF. NO. | PART NO. | DESCRIPTION | J0D5 | | | | | REMARKS |
|---|---|---|---|---|---|---|---|---|
| 1 | 95602–08100 | NUT, U | 1 | | | | | |
| 2 | J0B–G8330–00 | CABLE END ASSY | 1 | | | | | |
| 3 | J0B–G6371–00 | .WIRE, SHIFT | 2 | | | | | |
| 4 | JW8–G6383–10 | .LEVER, SHIFT 2 | 1 | | | | | |
| 5 | J0B–G6382–00 | LEVER, SHIFT 1 | 1 | | | | | |
| 6 | 91702–06014 | PIN, CLEVIS | 2 | | | | | |
| 7 | 92902–06600 | WASHER, PLATE | 2 | | | | | |
| 8 | 91402–20012 | PIN, COTTER | 2 | | | | | |
| 9 | JN3–G6381–00 | KNOB, SHIFT | 1 | | | | | |
| 10 | JN3–G6376–00 | SPRING SET | 1 | | | | | |
| 11 | 90201–208S8 | WASHER, PLATE | 1 | | | | | |
| 12 | 90201–198S7 | WASHER, PLATE | 1 | | | | | |
| 13 | 99009–19400 | CIRCLIP | 1 | | | | | |
| 14 | 98502–04016 | SCREW, PAN HEAD | 2 | | | | | |
| 15 | 92902–04100 | WASHER, SPRING | 2 | | | | | |
| 16 | 92902–04600 | WASHER, PLATE | 2 | | | | | |
| 17 | J0B–G6372–10 | BRACKET, SHIFT WIRE | 1 | | | | | |
| 18 | 90105–06831 | BOLT, FLANGE | 3 | | | | | |
| 19 | JN3–82617–01 | SWITCH | 1 | | | | | |
| 20 | 90465–06038 | CLAMP | 1 | | | | | |

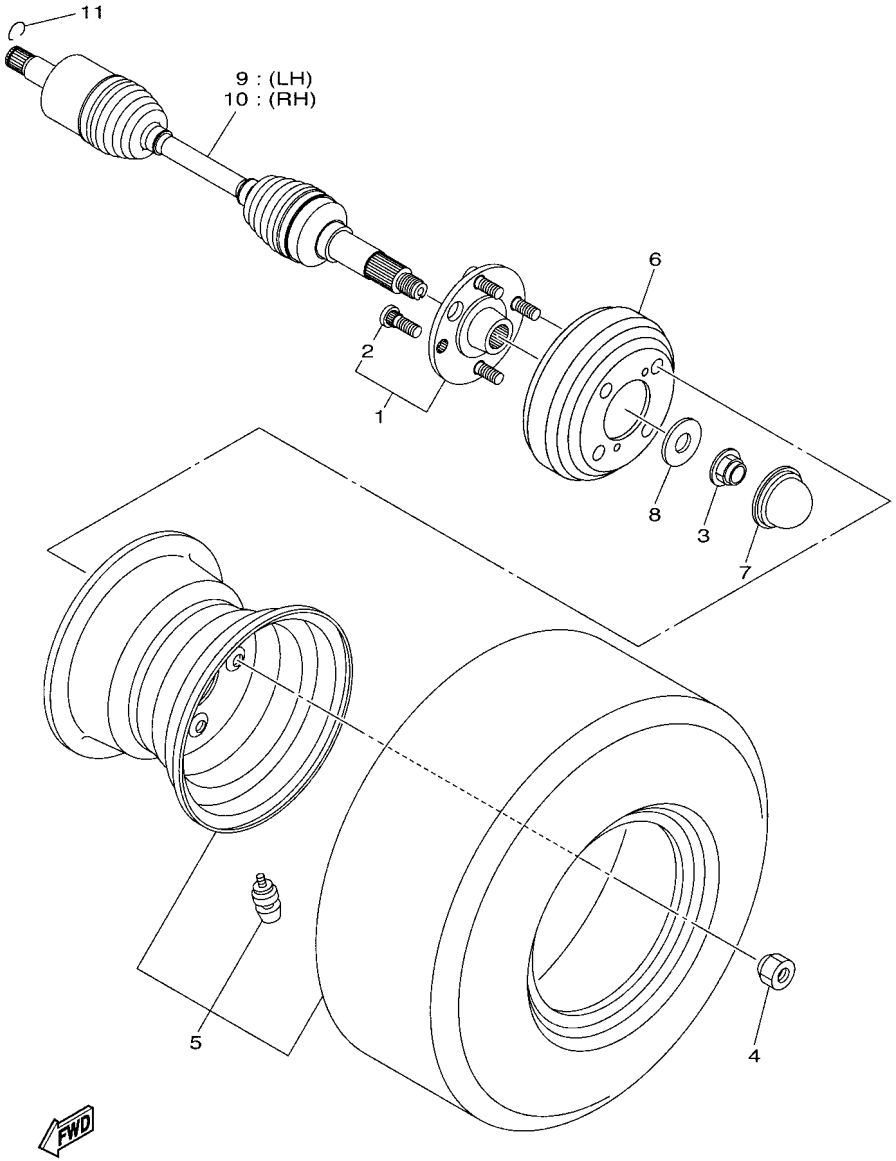


J0D1100-S240

## FIG. 24 REAR AXLE & WHEEL

| REF. NO. | PART NO. | DESCRIPTION | J0D5 | | | | | REMARKS |
|---|---|---|---|---|---|---|---|---|
| 1 | J0B–F5310–10 | HUB ASSY | 2 | | | | | |
| 2 | 90114–12006 | .BOLT, SERRATION | 4 | | | | | |
| 3 | 90179–20016 | NUT | 2 | | | | | |
| 4 | 90179–12262 | NUT | 8 | | | | | |
| 5 | JC1–F5100–01 | WHEEL ASSY (205/65-10 4P) | 2 | | | | | |
| 6 | JW3–G6521–00 | DRUM | 2 | | | | | |
| 7 | JW8–F5118–00 | COVER, HUB DUST | 2 | | | | | |
| 8 | 90201–20035 | WASHER, PLATE | 2 | | | | | |
| 9 | J0B–F518F–00 | DRIVE SHAFT ASSY | 1 | | | | | |
| 10 | J0B–F518G–00 | DRIVE SHAFT ASSY | 1 | | | | | |
| 11 | 93450–22119 | CIRCLIP | 2 | | | | | |

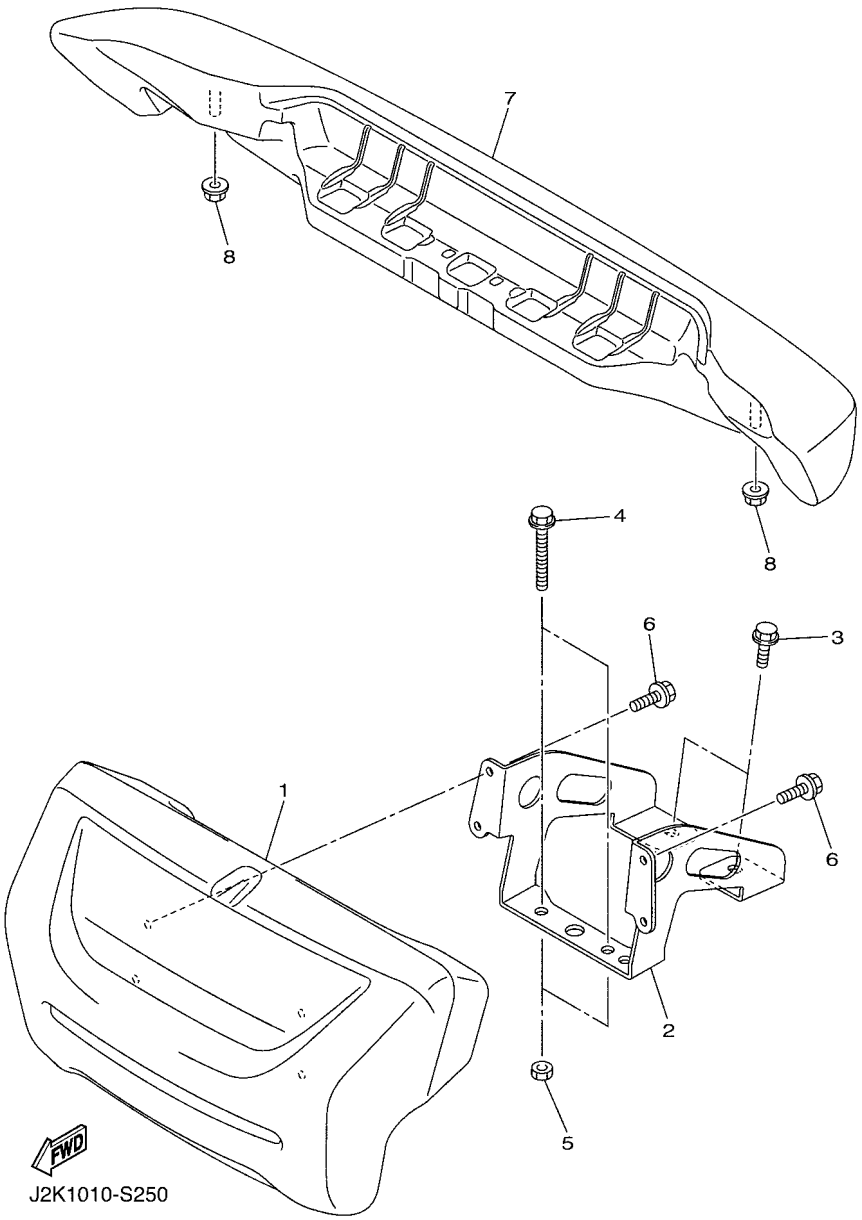


## FIG. 25 BUMPER

| REF. NO. | PART NO. | DESCRIPTION | J0D5 | | | | | REMARKS |
|---|---|---|---|---|---|---|---|---|
| 1 | J0B–K7510–01 | FRONT BUMPER COMP. | 1 | | | | | |
| 2 | J0B–K8164–00 | STAY, FRONT BUMPER (L.H) | 1 | | | | | |
| 3 | 95812–08016 | BOLT, FLANGE | 2 | | | | | |
| 4 | 95812–08050 | BOLT, FLANGE | 2 | | | | | |
| 5 | 95302–08700 | NUT, HEXAGON | 2 | | | | | |
| 6 | 95822–06012 | BOLT, FLANGE | 4 | | | | | |
| 7 | J0B–K7540–00 | REAR BUMPER COMP. | 1 | | | | | |
| 8 | 95602–10200 | NUT, S/L FLANGE | 2 | | | | | |

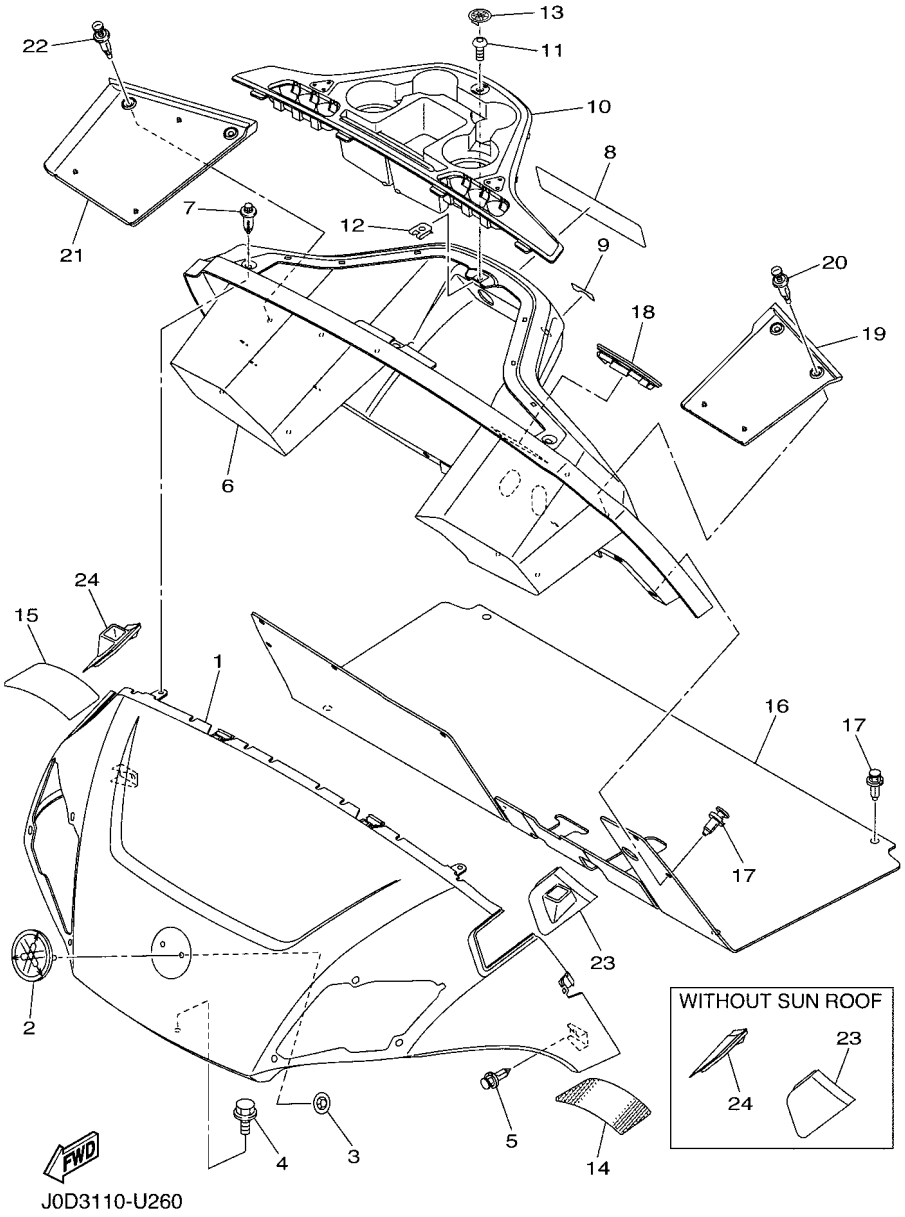


## FIG. 26 BODY

| REF. NO. | PART NO. | DESCRIPTION | J0D5 | | | | | REMARKS |
|---|---|---|---|---|---|---|---|---|
| 1 | J0D–K8115–A0 | COWL, FRONT | 1 | | | | | UR FOR BW1 |
| | J0D–K8115–00 | COWL, FRONT | 1 | | | | | UR FOR DNBME |
| | J0D–K8115–30 | COWL, FRONT | 1 | | | | | UR FOR LNMP |
| | J0D–K8115–70 | COWL, FRONT | 1 | | | | | UR FOR DRMV |
| | J0D–K8115–80 | COWL, FRONT | 1 | | | | | UR FOR BMG |
| | J0D–K8115–90 | COWL, FRONT | 1 | | | | | UR FOR VPBM6 |
| | J0D–K8115–T0 | COWL, FRONT | 1 | | | | | UR FOR MNYM2 |
| | J0D–K8115–U0 | COWL, FRONT | 1 | | | | | UR FOR MDNM7 |
| | J0D–K8115–V0 | COWL, FRONT | 1 | | | | | UR FOR MDOM1 |
| 2 | J0B–F4161–00 | EMBLEM 1 | 1 | | | | | |
| 3 | JU0–K7573–00 | NUT, SPECIAL | 2 | | | | | |
| 4 | 90105–06831 | BOLT, FLANGE | 1 | | | | | |
| 5 | 90269–06804 | RIVET | 2 | | | | | |
| 6 | J0D–K8114–01 | PANEL, FRONT | 1 | | | | | |
| 7 | 90269–08001 | RIVET | 3 | | | | | |
| 8 | J0D–K7768–00 | LABEL, WARNING 8 | 1 | | | | | UR ENGLISH |
| | J0D–K7768–10 | LABEL, WARNING 8 | 1 | | | | | UR ENGLISH/FRENCH |
| | J0D–K7768–20 | LABEL, WARNING 8 | 1 | | | | | UR GERMAN |
| | J0D–K7768–30 | LABEL, WARNING 8 | 1 | | | | | UR SPANISH |
| | J0D–K7768–40 | LABEL, WARNING 8 | 1 | | | | | UR PORTUGUESE |
| 9 | J0D–K8282–00 | PLATE, SWITCH PANEL | 1 | | | | | |
| 10 | J0B–K835E–00 | HOLDER, BEVERAGE | 1 | | | | | |
| 11 | 90111–05805 | BOLT,HEX. SOCKET BUTTON | 1 | | | | | |
| 12 | 90183–05008 | NUT, SPRING | 1 | | | | | |
| 13 | J0B–H2370–00 | PLUG CAP ASSY | 1 | | | | | |
| 14 | J0D–H333B–00 | REFLECTOR 1 | 1 | | | | | |
| 15 | J0D–H334B–00 | REFLECTOR, 2 | 1 | | | | | |

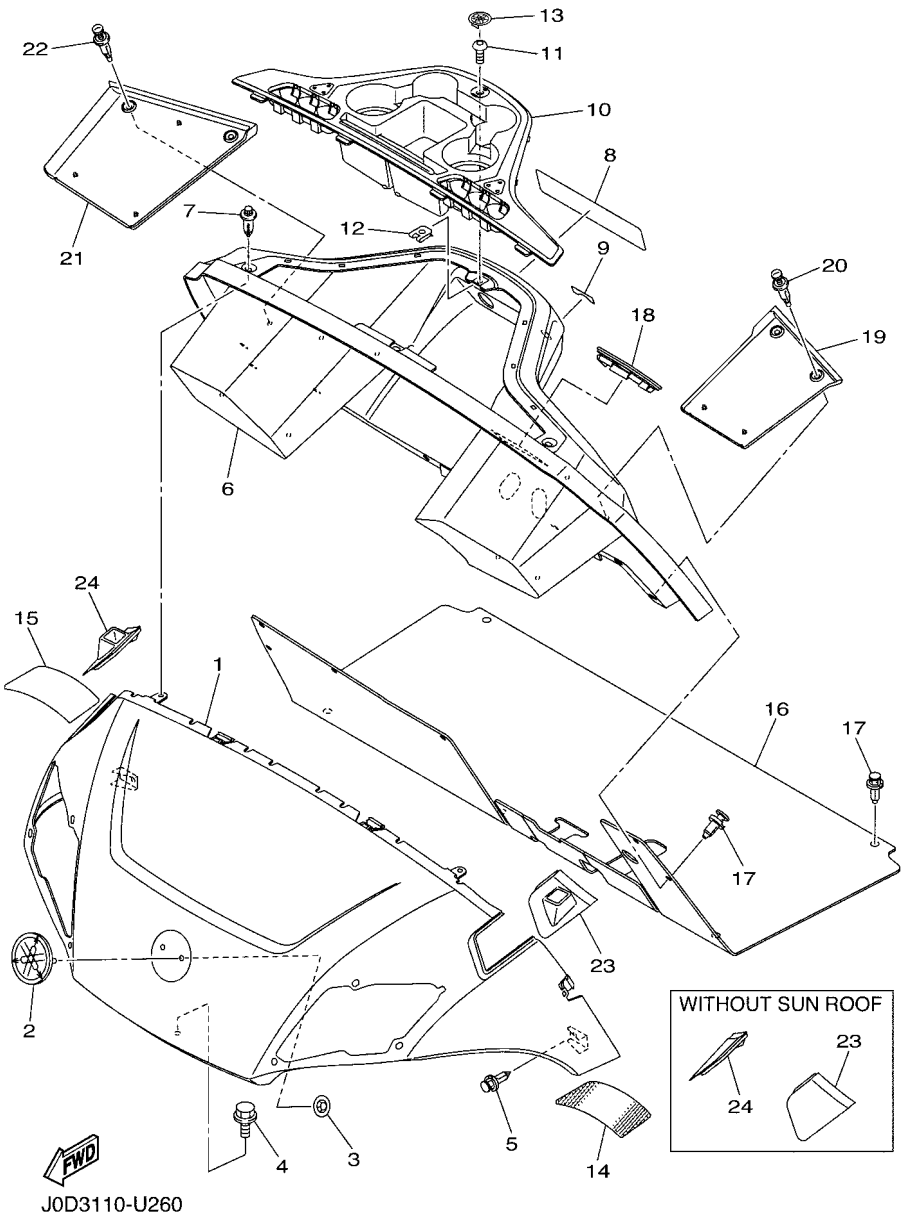


## FIG. 26 BODY

| REF. NO. | PART NO. | DESCRIPTION | J0D5 | | | | | REMARKS |
|---|---|---|---|---|---|---|---|---|
| 16 | J0D–K8233–10 | MAT, MAIN FLOOR 3 | 1 | | | | | |
| 17 | 90269–09003 | RIVET | 12 | | | | | |
| 18 | J0B–K8273–10 | COVER, HOLE | 1 | | | | | |
| 19 | J0B–K8243–00 | MAT, REAR BODY SIDE (LH) | 1 | | | | | |
| 20 | 90269–07805 | RIVET | 2 | | | | | |
| 21 | J0B–K8244–00 | MAT, REAR BODY SIDE (RH) | 1 | | | | | |
| 22 | 90269–07805 | RIVET | 2 | | | | | |
| 23 | J1B–K832F–00 | GROMMET, ROOF SUPPORT 1 | 1 | | | | | WITH SUN ROOF |
| | J0B–K832F–00 | GROMMET, ROOF SUPPORT 1 | 1 | | | | | WITHOUT SUN ROOF |
| 24 | J1B–K832G–00 | GROMMET, ROOF SUPPORT 2 | 1 | | | | | WITH SUN ROOF |
| | J0B–K832G–00 | GROMMET, ROOF SUPPORT 2 | 1 | | | | | WITHOUT SUN ROOF |

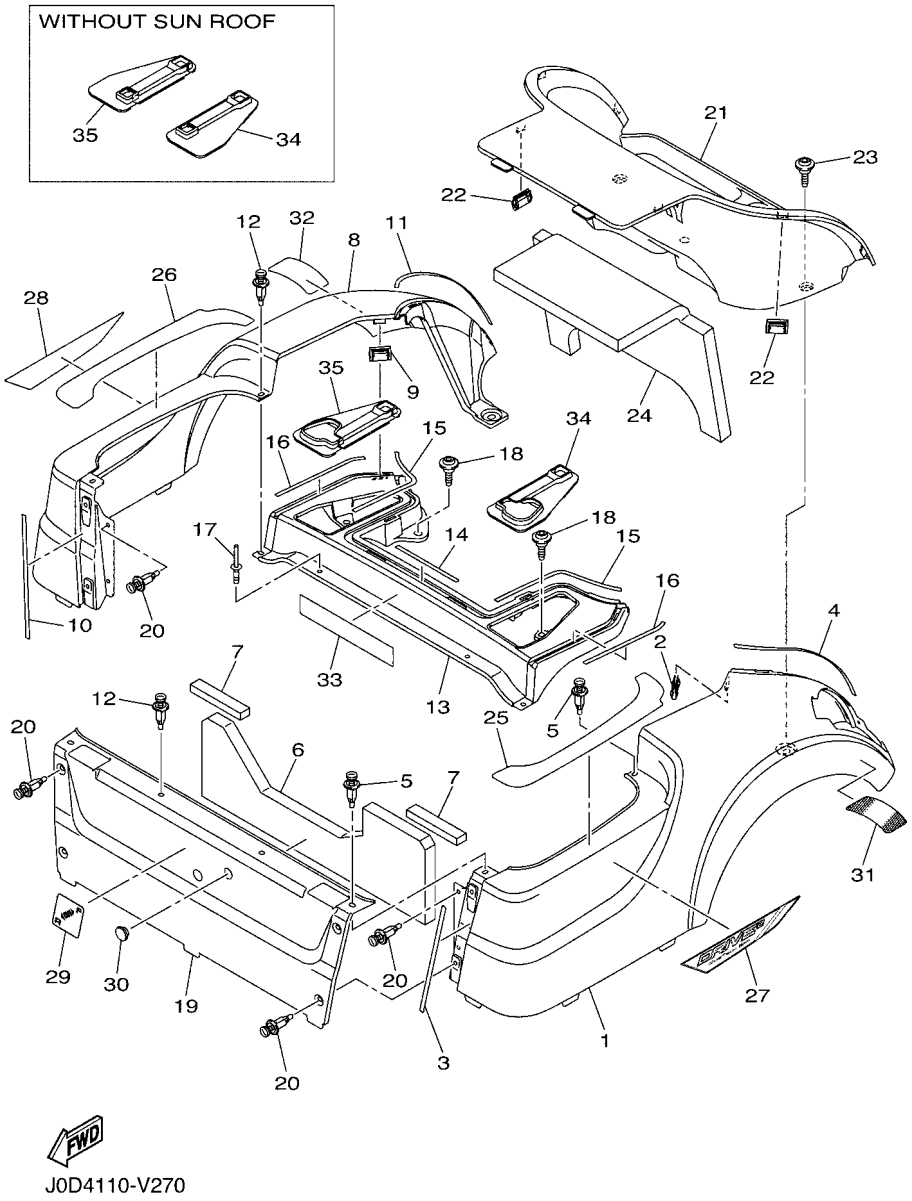


## FIG. 27 BODY 2

| REF. NO. | PART NO. | DESCRIPTION | J0D5 | | | | | REMARKS |
|---|---|---|---|---|---|---|---|---|
| 1 | J0D–K8111–A0 | PANEL, BODY SHELL | 1 | | | | | UR FOR BW1 |
| | J0D–K8111–00 | PANEL, BODY SHELL | 1 | | | | | UR FOR DNBME |
| | J0D–K8111–30 | PANEL, BODY SHELL | 1 | | | | | UR FOR LNMP |
| | J0D–K8111–70 | PANEL, BODY SHELL | 1 | | | | | UR FOR DRMV |
| | J0D–K8111–80 | PANEL, BODY SHELL | 1 | | | | | UR FOR BMG |
| | J0D–K8111–90 | PANEL, BODY SHELL | 1 | | | | | UR FOR VPBM6 |
| | J0D–K8111–T0 | PANEL, BODY SHELL | 1 | | | | | UR FOR MNYM2 |
| | J0D–K8111–U0 | PANEL, BODY SHELL | 1 | | | | | UR FOR MDNM7 |
| | J0D–K8111–V0 | PANEL, BODY SHELL | 1 | | | | | UR FOR MDOM1 |
| 2 | J0B–F3447–00 | CLIP | 1 | | | | | |
| 3 | J0B–K814E–00 | SEAL, BODY SIDE 1 | 1 | | | | | |
| 4 | J0B–K814F–00 | SEAL, BODY SIDE 2 | 1 | | | | | |
| 5 | 90269–07805 | RIVET | 3 | | | | | |
| 6 | J0B–K8251–00 | PAD, SILENCER 1 | 1 | | | | | |
| 7 | J0D–K825G–00 | PAD, SILENCER 13 | 2 | | | | | |
| 8 | J0D–K8112–A0 | PANEL, BODY SHELL | 1 | | | | | UR FOR BW1 |
| | J0D–K8112–00 | PANEL, BODY SHELL | 1 | | | | | UR FOR DNBME |
| | J0D–K8112–30 | PANEL, BODY SHELL | 1 | | | | | UR FOR LNMP |
| | J0D–K8112–70 | PANEL, BODY SHELL | 1 | | | | | UR FOR DRMV |
| | J0D–K8112–80 | PANEL, BODY SHELL | 1 | | | | | UR FOR BMG |
| | J0D–K8112–90 | PANEL, BODY SHELL | 1 | | | | | UR FOR VPBM6 |
| | J0D–K8112–T0 | PANEL, BODY SHELL | 1 | | | | | UR FOR MNYM2 |
| | J0D–K8112–U0 | PANEL, BODY SHELL | 1 | | | | | UR FOR MDNM7 |
| | J0D–K8112–V0 | PANEL, BODY SHELL | 1 | | | | | UR FOR MDOM1 |
| 9 | J0B–F3447–00 | CLIP | 1 | | | | | |
| 10 | J0B–K814E–00 | SEAL, BODY SIDE 1 | 1 | | | | | |
| 11 | J0B–K814F–00 | SEAL, BODY SIDE 2 | 1 | | | | | |

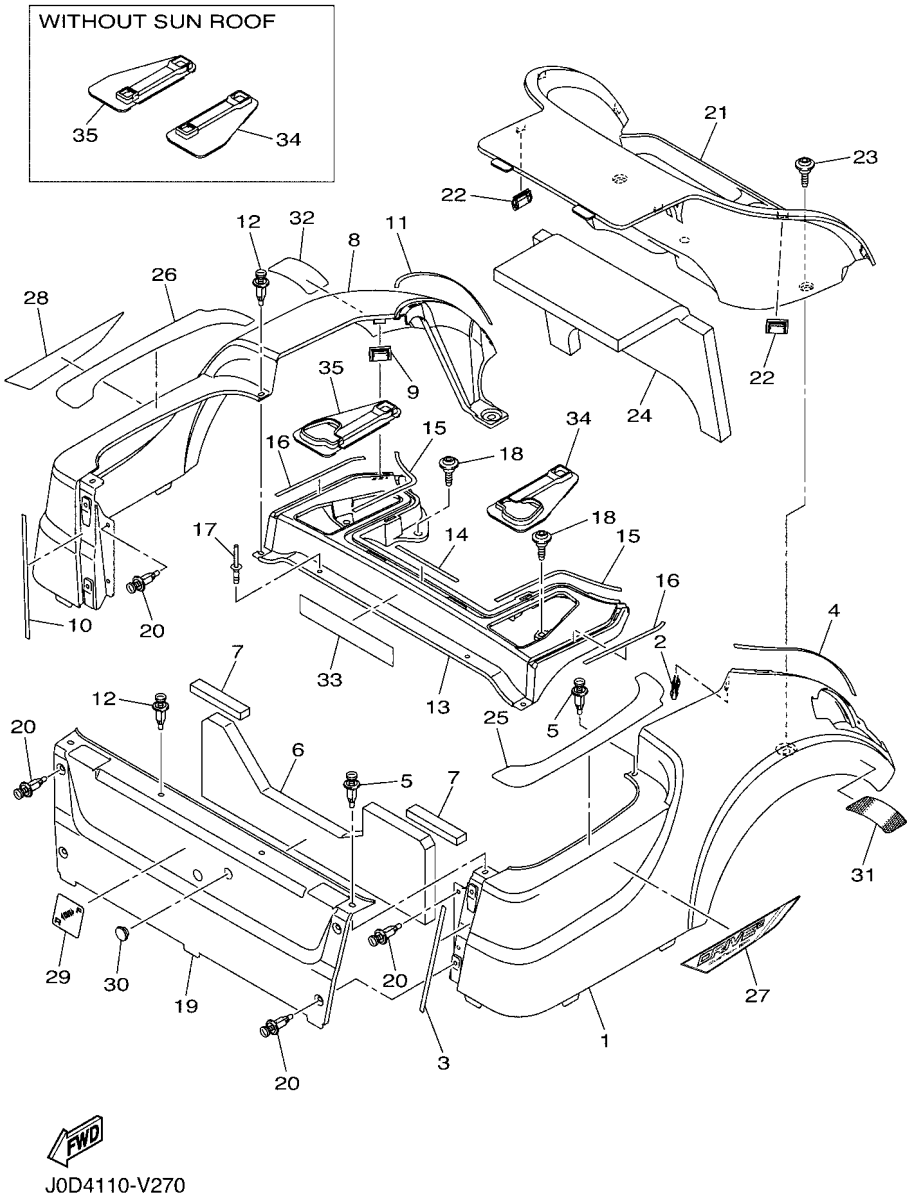


## FIG. 27 BODY 2

| REF. NO. | PART NO. | DESCRIPTION | J0D5 | | | | | REMARKS |
|---|---|---|---|---|---|---|---|---|
| 12 | 90269–07805 | RIVET | 3 | | | | | |
| 13 | J0B–K819H–00 | SHELL, REAR BODY | 1 | | | | | |
| 14 | J0B–K814R–00 | SEAL, BODY SIDE 3 | 1 | | | | | |
| 15 | J0B–K814T–00 | SEAL, BODY SIDE 4 | 2 | | | | | |
| 16 | J0B–K814U–00 | SEAL, BODY SIDE | 2 | | | | | |
| 17 | JW7–K7329–00 | RIVET | 2 | | | | | |
| 18 | J0B–F1738–00 | BOLT | 4 | | | | | |
| 19 | J0B–K8141–A0 | PANEL, INTERMEDIATE BODY | 1 | | | | | UR FOR BW1 |
| | J0B–K8141–00 | PANEL, INTERMEDIATE BODY | 1 | | | | | UR FOR DNBME |
| | J0B–K8141–30 | PANEL, INTERMEDIATE BODY | 1 | | | | | UR FOR LNMP |
| | J0B–K8141–70 | PANEL, INTERMEDIATE BODY | 1 | | | | | UR FOR DRMV |
| | J0B–K8141–80 | PANEL, INTERMEDIATE BODY | 1 | | | | | UR FOR BMG |
| | J0B–K8141–90 | PANEL, INTERMEDIATE BODY | 1 | | | | | UR FOR VPBM6 |
| | J0B–K8141–T0 | PANEL, INTERMEDIATE BODY | 1 | | | | | UR FOR MNYM2 |
| | J0B–K8141–U0 | PANEL, INTERMEDIATE BODY | 1 | | | | | UR FOR MDNM7 |
| | J0B–K8141–V0 | PANEL, INTERMEDIATE BODY | 1 | | | | | UR FOR MDOM1 |
| 20 | 90269–07805 | RIVET | 8 | | | | | |
| 21 | J0B–K8237–02 | COVER, REAR FLOOR | 1 | | | | | FOR 2 BAGS |
| 22 | J0B–F3447–00 | CLIP | 4 | | | | | |
| 23 | J0B–F1738–00 | BOLT | 2 | | | | | |
| 24 | J0B–K8255–02 | PAD, SILENCER 5 | 1 | | | | | |
| 25 | J0B–F2873–01 | SEAL 1 | 1 | | | | | |
| 26 | J0B–F2874–01 | SEAL 2 | 1 | | | | | |
| 27 | J0D–F1781–40 | EMBLEM 1 | 1 | | | | | UR FOR BMG |
| | J0D–F1781–50 | EMBLEM 1 | 1 | | | | | UR EXCEPT FOR BMG |
| 28 | J0D–F1782–40 | EMBLEM 2 | 1 | | | | | UR FOR BMG |
| | J0D–F1782–50 | EMBLEM 2 | 1 | | | | | UR EXCEPT FOR BMG |

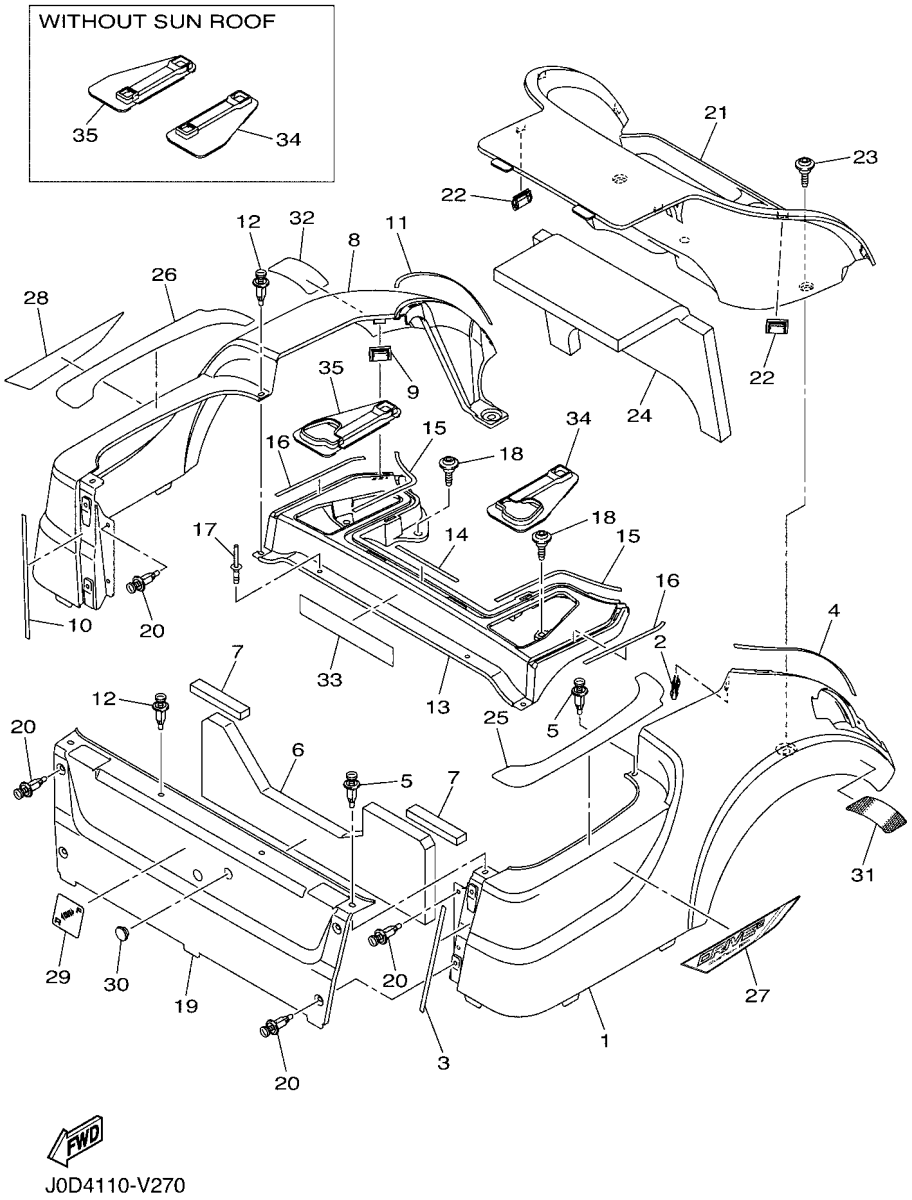


## FIG. 27 BODY 2

| REF. NO. | PART NO. | DESCRIPTION | J0D5 | | | | | REMARKS |
|---|---|---|---|---|---|---|---|---|
| 29 | JW1–K7741–00 | INDICATOR 1 | 1 | | | | | |
| 30 | JR1–K8139–00 | CAP, END | 1 | | | | | |
| 31 | J0D–H360G–00 | REFLECTOR 3 | 1 | | | | | |
| 32 | J0D–H360H–00 | REFLECTOR 4 | 1 | | | | | |
| 33 | JW1–K8297–02 | PLATE, CAUTION 1 | 1 | | | | | UR ENGLISH/FRENCH |
| | JW1–K8297–11 | PLATE, CAUTION 1 | 1 | | | | | UR GERMAN/SPANISH |
| | JW1–K8297–40 | PLATE, CAUTION 1 | 1 | | | | | UR PORTUGUESE/SPANISH |
| 34 | J0B–K817H–10 | TRIM, SIDE PANEL 1 | 1 | | | | | WITH SUN ROOF |
| | J0B–K817H–00 | TRIM, SIDE PANEL 1 | 1 | | | | | WITHOUT SUN ROOF |
| 35 | J0B–K817J–10 | TRIM, SIDE PANEL 2 | 1 | | | | | WITH SUN ROOF |
| | J0B–K817J–00 | TRIM, SIDE PANEL 2 | 1 | | | | | WITHOUT SUN ROOF |

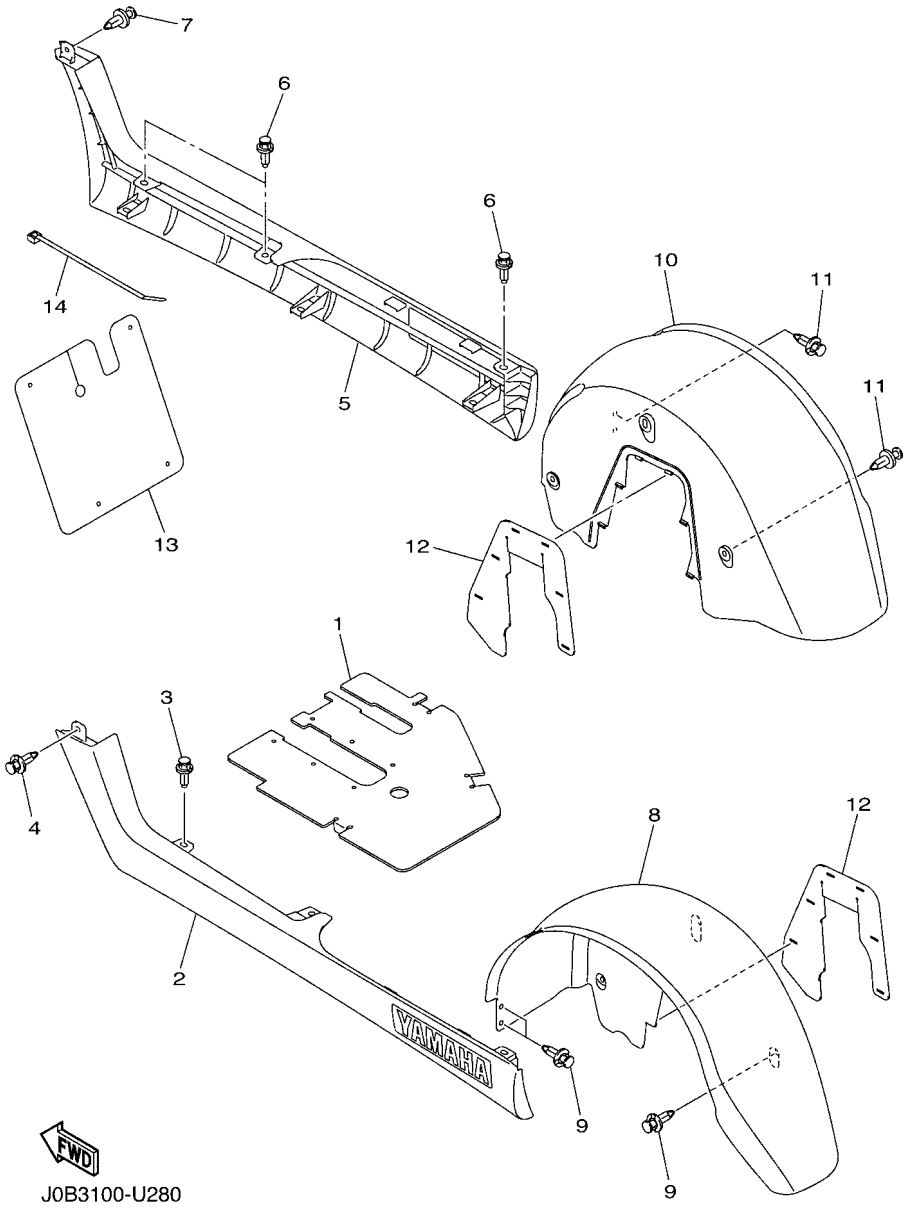


## FIG. 28 BODY FITTING

| REF. NO. | PART NO. | DESCRIPTION | J0D5 | | | | | REMARKS |
|---|---|---|---|---|---|---|---|---|
| 1 | J0B–K8271–01 | SERVICE LID, PEDAL | 1 | | | | | |
| 2 | J0B–K818A–00 | PROTECTOR, SIDE PLATE | 1 | | | | | |
| 3 | 90269–09003 | RIVET | 3 | | | | | |
| 4 | 90269–06804 | RIVET | 1 | | | | | |
| 5 | J0B–K818B–00 | PROTECTOR, SIDE PLATE 2 | 1 | | | | | |
| 6 | 90269–09003 | RIVET | 3 | | | | | |
| 7 | 90269–06804 | RIVET | 1 | | | | | |
| 8 | J0B–K8191–00 | PANEL, REAR FENDER 1 | 1 | | | | | |
| 9 | 90269–06804 | RIVET | 5 | | | | | |
| 10 | J0B–K8192–00 | PANEL, REAR FENDER 2 | 1 | | | | | |
| 11 | 90269–06804 | RIVET | 5 | | | | | |
| 12 | J0B–K8197–01 | FLAP, REAR FENDER | 2 | | | | | |
| 13 | J0B–K8187–00 | FLAP, FRONT FENDER | 1 | | | | | |
| 14 | 90464–76800 | CLAMP | 4 | | | | | |

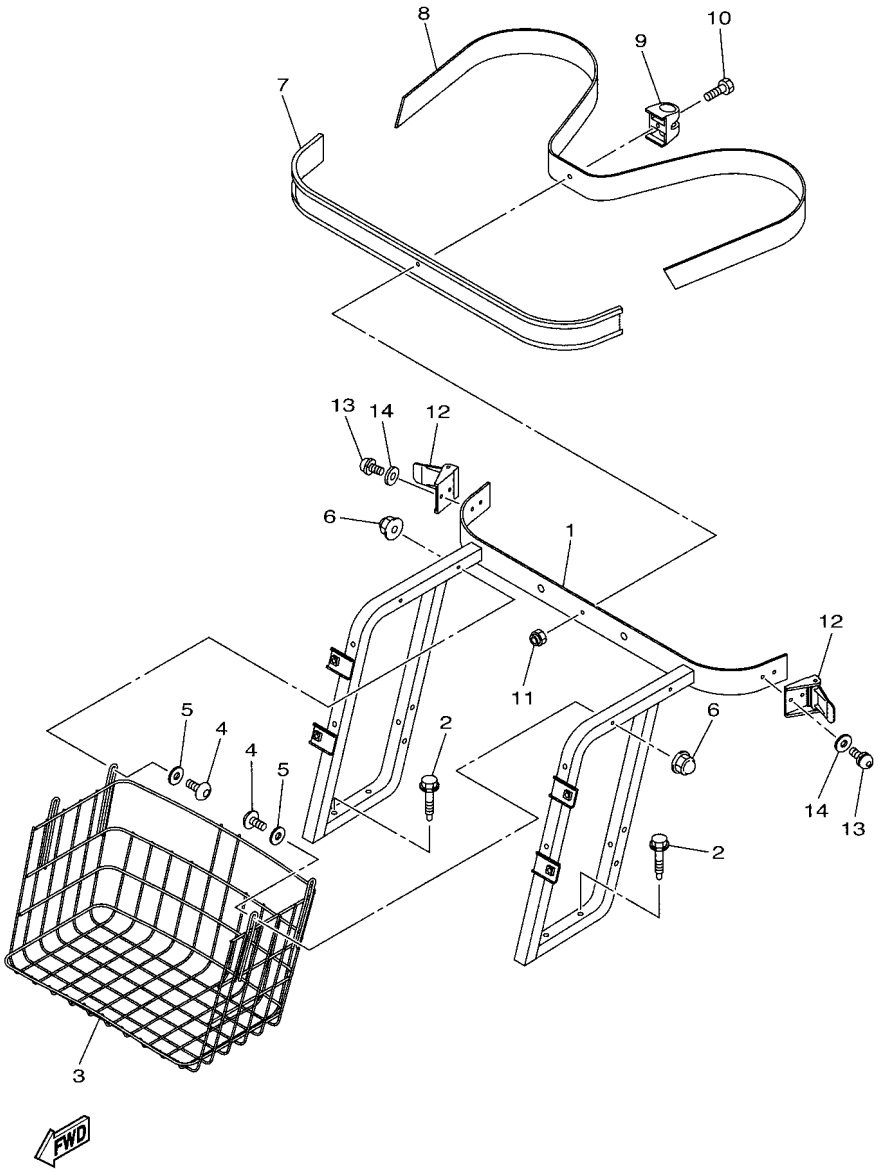


J0B1110-S280

## FIG. 29 CARRIER

| REF. NO. | PART NO. | DESCRIPTION | J0D5 | | | | | REMARKS |
|---|---|---|---|---|---|---|---|---|
| 1 | J0B–K8423–00 | SUPPORT, SEAT BACK | 1 | | | | | |
| 2 | 90109–08178 | BOLT | 4 | | | | | |
| 3 | JW1–K8340–00 | LUGGAGE RACK ASSY., REAR | 1 | | | | | |
| 4 | 92017–06040 | BOLT, BUTTON HEAD | 4 | | | | | |
| 5 | J0B–K7389–00 | WASHER | 4 | | | | | |
| 6 | 90176–06008 | NUT, CROWN | 4 | | | | | |
| 7 | JF2–K8356–00 | PAD, BAG SUPPORT | 1 | | | | | |
| 8 | JN6–K8355–20 | BAND | 1 | | | | | |
| 9 | JW1–K834G–00 | HOLDER, RAKE SAND | 1 | | | | | |
| 10 | 9708R–06020 | BOLT | 1 | | | | | |
| 11 | 90185–06836 | NUT, SELF-LOCKING | 1 | | | | | |
| 12 | JN6–K8380–00 | LOCK ASSY | 2 | | | | | |
| 13 | 90159–06845 | SCREW, WITH WASHER | 4 | | | | | |
| 14 | 9299R–06200 | WASHER | 4 | | | | | |

## FIG. 30 REAR VIEW MIRROR

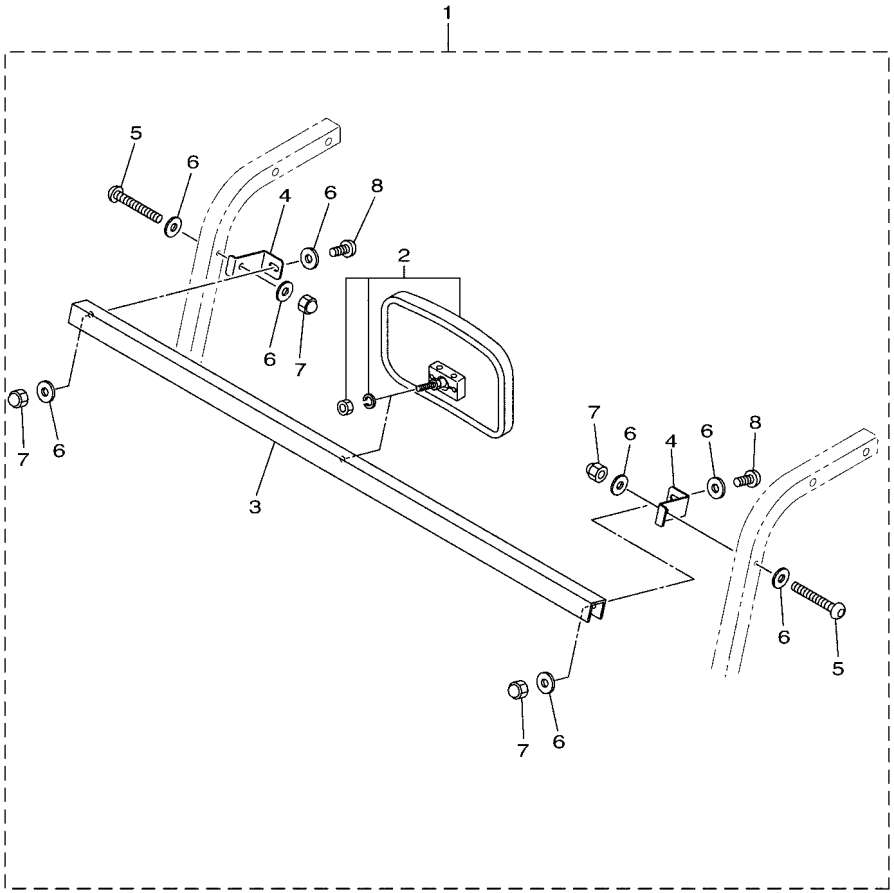

JC17100-P150

| REF. NO. | PART NO. | DESCRIPTION | J0D5 | | | | | REMARKS |
|---|---|---|---|---|---|---|---|---|
| 1 | JC0–F6280–11 | REAR VIEW MIRROR ASSY (LEFT) | 1 | | | | | |
| 2 | JC0–F6291–11 | .MIRROR | 1 | | | | | |
| 3 | JC0–F831W–20 | .STAY, MIRROR 1 | 1 | | | | | |
| 4 | JC0–F834N–20 | .BRACKET, MIRROR 1 | 2 | | | | | |
| 5 | JW1–K7387–20 | .SCREW | 2 | | | | | |
| 6 | JC0–K7178–00 | .WASHER 1 | 8 | | | | | |
| 7 | JW1–K7217–10 | .NUT, WIND SHIELD | 4 | | | | | |
| 8 | JC0–K7212–10 | .BOLT, WIND SHIELD | 2 | | | | | |

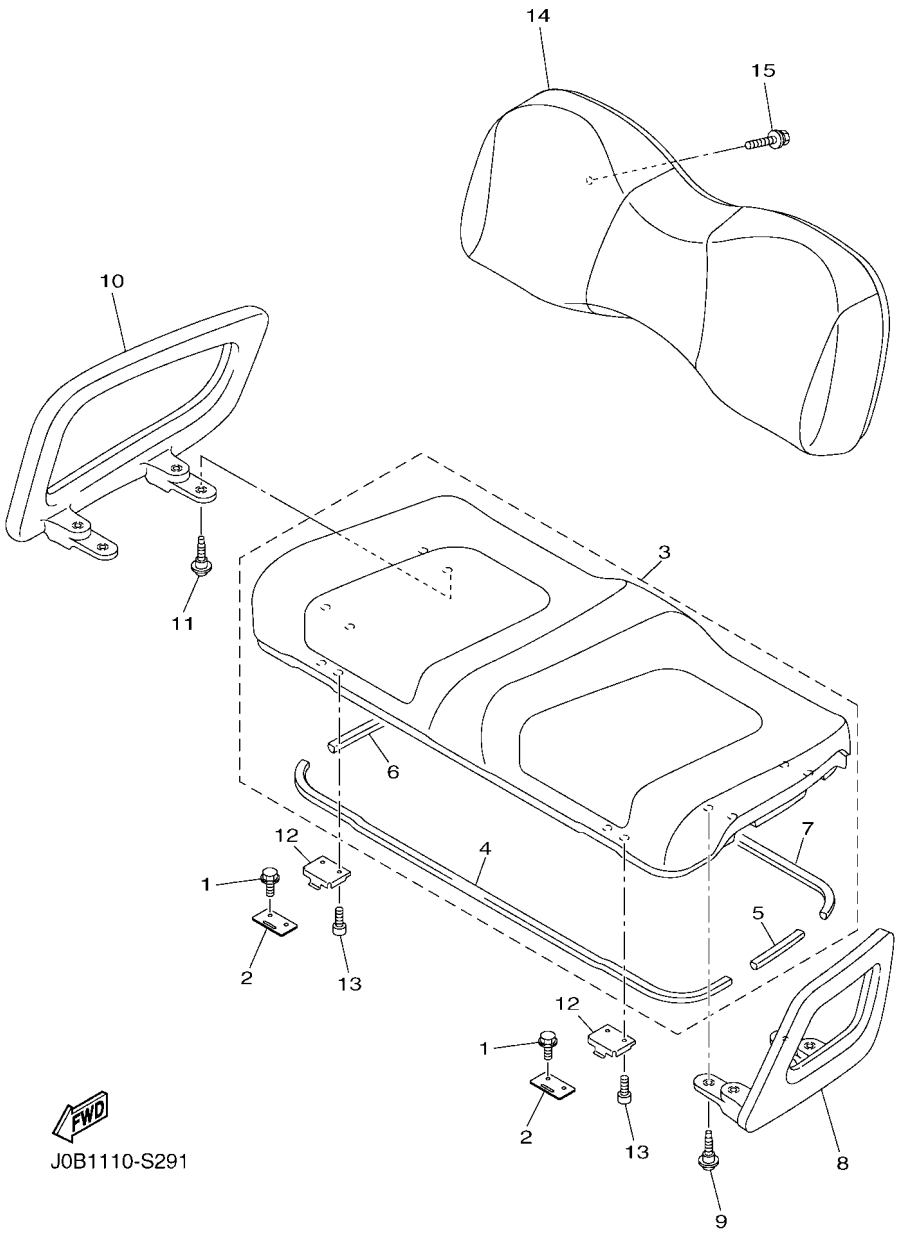


## FIG. 31 SEAT

| REF. NO. | PART NO. | DESCRIPTION | J0D5 | | | | | REMARKS |
|---|---|---|---|---|---|---|---|---|
| 1 | JW9–H1674–00 | BOLT | 4 | | | | | |
| 2 | J0B–K8427–00 | HINGE, SEAT 2 | 2 | | | | | |
| 3 | J0B–K8401–10 | SEAT SUB-ASSY,CUSHION | 1 | | | | | |
| 4 | J0B–K8245–00 | .SEAL 1 | 1 | | | | | |
| 5 | J0B–K8246–00 | .SEAL 2 | 1 | | | | | |
| 6 | J0B–K8247–00 | .SEAL 3 | 1 | | | | | |
| 7 | J0B–K8248–00 | .SEAL 4 | 1 | | | | | |
| 8 | J0B–K8361–00 | ARM REST 1 | 1 | | | | | |
| 9 | J0B–F1738–00 | BOLT | 4 | | | | | |
| 10 | J0B–K8362–00 | ARM REST 2 | 1 | | | | | |
| 11 | J0B–F1738–00 | BOLT | 4 | | | | | |
| 12 | J0B–K8426–10 | HINGE, SEAT 1 | 2 | | | | | |
| 13 | 90110–06125 | BOLT, HEXAGON SOCKET HEAD | 4 | | | | | |
| 14 | JW1–K8402–10 | SEAT SUB ASSY, BACK | 1 | | | | | |
| 15 | 90119–06808 | BOLT, WITH WASHER | 4 | | | | | |

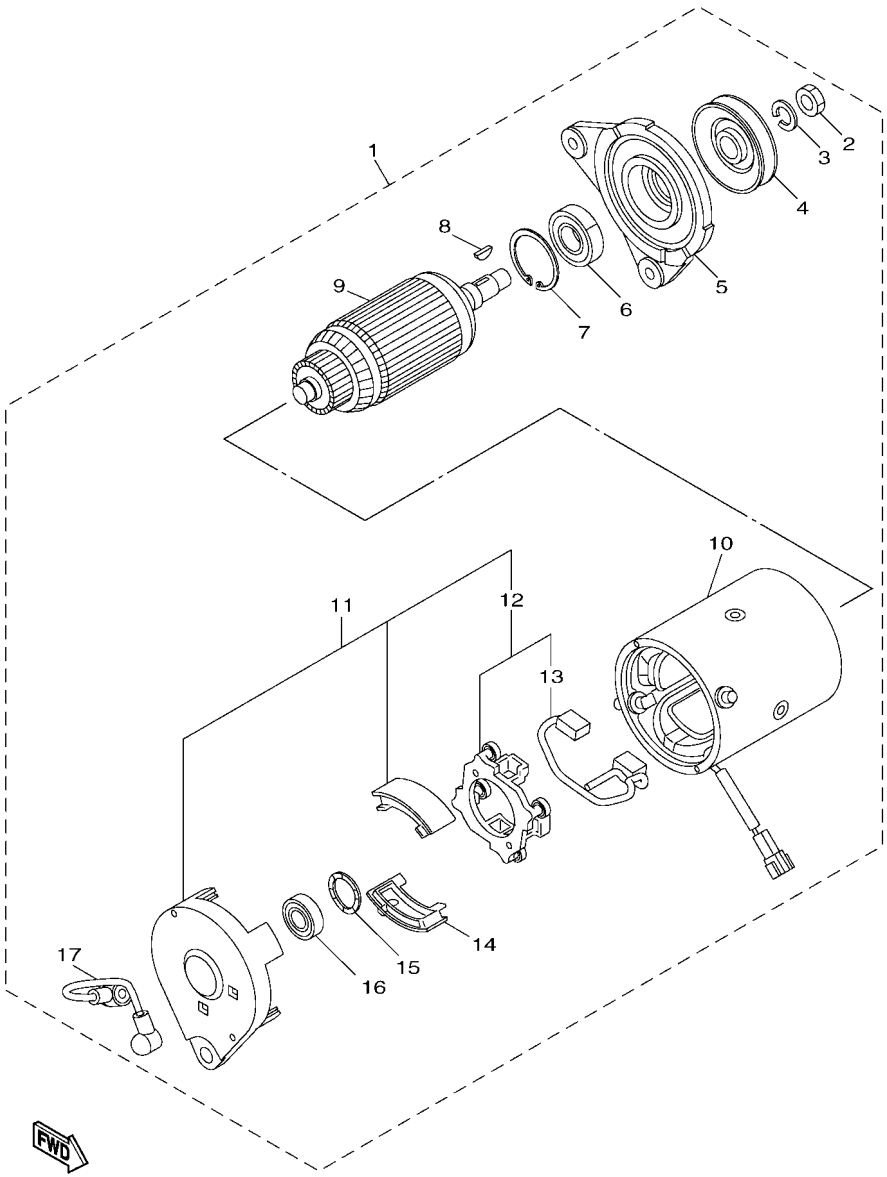

J1J1400-V320

## FIG. 32 STARTING MOTOR

| REF. NO. | PART NO. | DESCRIPTION | J0D5 | | | | | REMARKS |
|---|---|---|---|---|---|---|---|---|
| 1 | J0B–H1100–00 | STARTER GENERATOR ASSY | 1 | | | | | |
| 2 | J0B–H1353–00 | .NUT | 1 | | | | | |
| 3 | J0B–H2534–00 | .WASHER, SPECIAL | 1 | | | | | |
| 4 | J0B–H1161–00 | .PULLEY | 1 | | | | | |
| 5 | J0B–H1165–00 | .BRACKET, STARTER GENERATOR 1 | 1 | | | | | |
| 6 | J0B–H1158–00 | .BEARING 2 | 1 | | | | | |
| 7 | J0B–HA906–00 | .CIRCLIP 1 | 1 | | | | | |
| 8 | J0B–H1163–00 | .KEY | 1 | | | | | |
| 9 | J0B–H1150–00 | .ARMATURE ASSY | 1 | | | | | |
| 10 | J0B–H1160–00 | .FIELD COIL ASSY | 1 | | | | | |
| 11 | J0B–H1166–00 | .BRACKET, STARTER GENERATOR 2 | 1 | | | | | |
| 12 | J0B–H1119–00 | ..BRUSH HOLDER ASSY | 1 | | | | | |
| 13 | J0B–H1111–00 | ...BRUSH | 1 | | | | | |
| 14 | J0B–H1139–00 | .COVER, BRUSH 2 | 1 | | | | | |
| 15 | J0B–H1554–00 | .WASHER | 1 | | | | | |
| 16 | J0B–H1157–00 | .BEARING 1 | 1 | | | | | |
| 17 | J0B–H1115–00 | .WIRE, LEAD | 1 | | | | | |

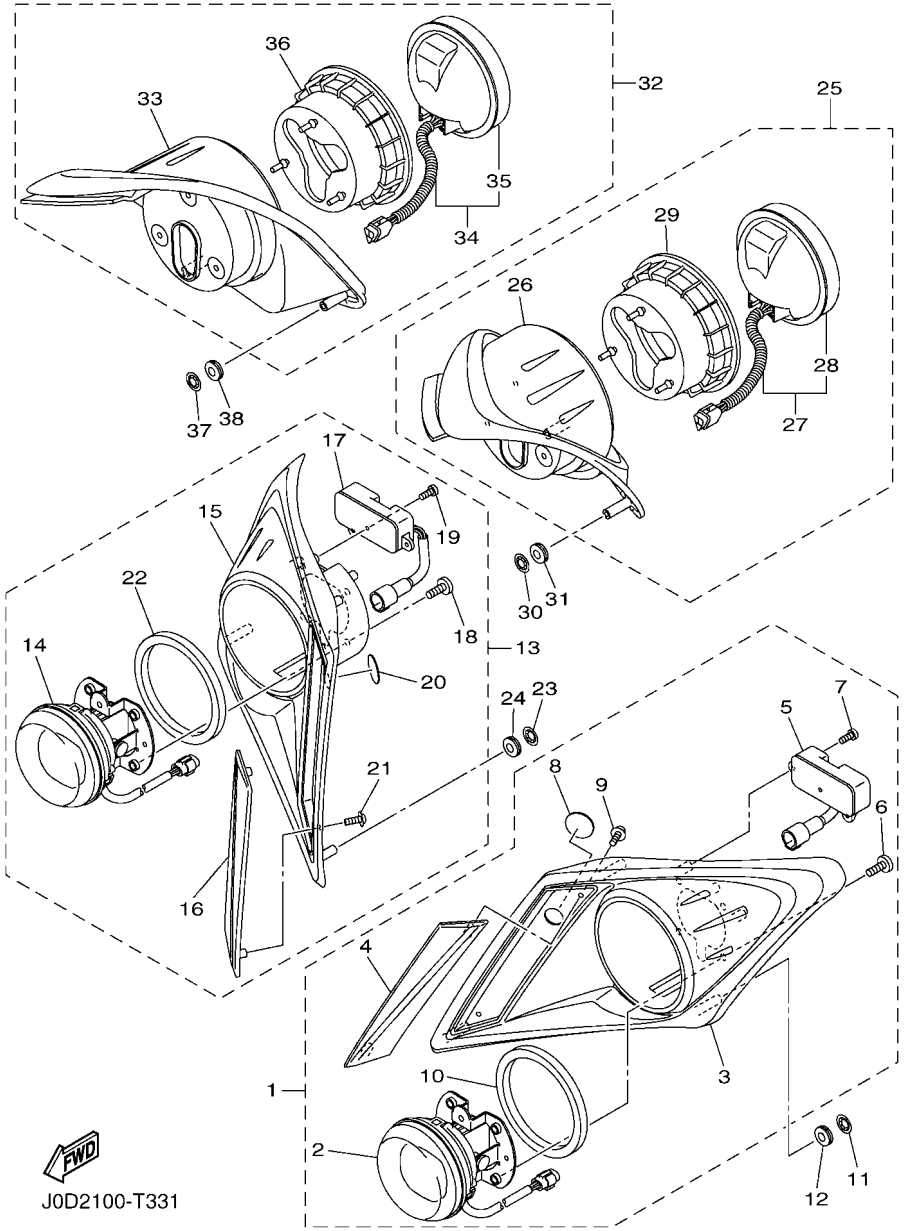


## FIG. 33 HEAD & TAIL LIGHT

| REF. NO. | PART NO. | DESCRIPTION | J0D5 | | | | | REMARKS |
|---|---|---|---|---|---|---|---|---|
| 1 | J0D–H4110–01 | HEADLIGHT UNIT ASSY | 1 | | | | | |
| 2 | J0D–H4300–00 | .HEADLIGHT ASSY | 1 | | | | | |
| 3 | J0D–H411T–01 | .HOLDER, 1 | 1 | | | | | |
| 4 | J0D–H4385–00 | .CAP,1 | 1 | | | | | |
| 5 | J0D–H5490–01 | .LIGHT CONTROL UNIT | 1 | | | | | |
| 6 | J0D–H4526–00 | .SCREW | 4 | | | | | |
| 7 | J0D–H4726–00 | .SCREW | 3 | | | | | |
| 8 | J0D–H3547–00 | .COVER, SOCKET | 1 | | | | | |
| 9 | J0D–H4524–00 | .SCREW, LENS FITTING | 2 | | | | | |
| 10 | J0D–H4195–00 | .RING, RETAINING | 1 | | | | | |
| 11 | 90183–08800 | NUT, SPRING | 3 | | | | | |
| 12 | 90480–13016 | GROMMET | 3 | | | | | |
| 13 | J0D–H4170–01 | HEAD LIGHT UNIT ASSY | 1 | | | | | |
| 14 | J0D–H4300–00 | .HEADLIGHT ASSY | 1 | | | | | |
| 15 | J0D–H411U–01 | .HOLDER, 2 | 1 | | | | | |
| 16 | J0D–H4386–00 | .CAP,2 | 1 | | | | | |
| 17 | J0D–H5490–01 | .LIGHT CONTROL UNIT | 1 | | | | | |
| 18 | J0D–H4526–00 | .SCREW | 4 | | | | | |
| 19 | J0D–H4726–00 | .SCREW | 3 | | | | | |
| 20 | J0D–H3547–00 | .COVER, SOCKET | 1 | | | | | |
| 21 | J0D–H4524–00 | .SCREW, LENS FITTING | 2 | | | | | |
| 22 | J0D–H4195–00 | .RING, RETAINING | 1 | | | | | |
| 23 | 90183–08800 | NUT, SPRING | 3 | | | | | |
| 24 | 90480–13016 | GROMMET | 3 | | | | | |
| 25 | J0D–H4710–01 | TAILLIGHT UNIT ASSY | 1 | | | | | |
| 26 | J0D–H431U–00 | .HOLDER | 1 | | | | | |
| 27 | J0D–H4700–01 | .TAILLIGHT ASSY | 1 | | | | | |

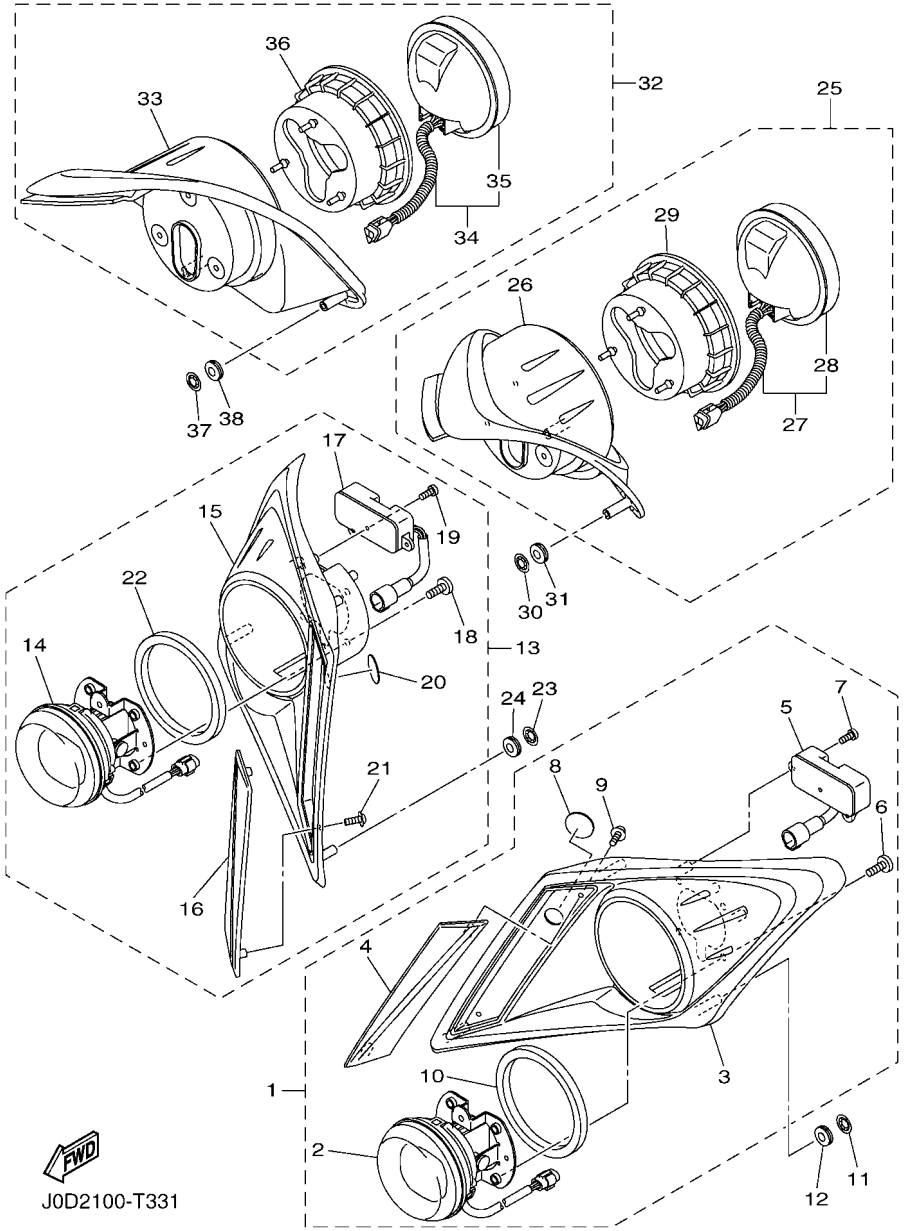


## FIG. 33 HEAD & TAIL LIGHT

| REF. NO. | PART NO. | DESCRIPTION | J0D5 | | | | | REMARKS |
|---|---|---|---|---|---|---|---|---|
| 28 | JC0–H4514–01 | ..BULB | 1 | | | | | |
| 29 | J0D–H4718–00 | .GROMMET | 1 | | | | | |
| 30 | 90183–08800 | NUT, SPRING | 2 | | | | | |
| 31 | 90480–13016 | GROMMET | 2 | | | | | |
| 32 | J0D–H4730–01 | TAILLIGHT UNIT ASSY | 1 | | | | | |
| 33 | J0D–H4387–00 | .HOLDER | 1 | | | | | |
| 34 | J0D–H4700–01 | .TAILLIGHT ASSY | 1 | | | | | |
| 35 | JC0–H4514–01 | ..BULB | 1 | | | | | |
| 36 | J0D–H4718–00 | .GROMMET | 1 | | | | | |
| 37 | 90183–08800 | NUT, SPRING | 2 | | | | | |
| 38 | 90480–13016 | GROMMET | 2 | | | | | |

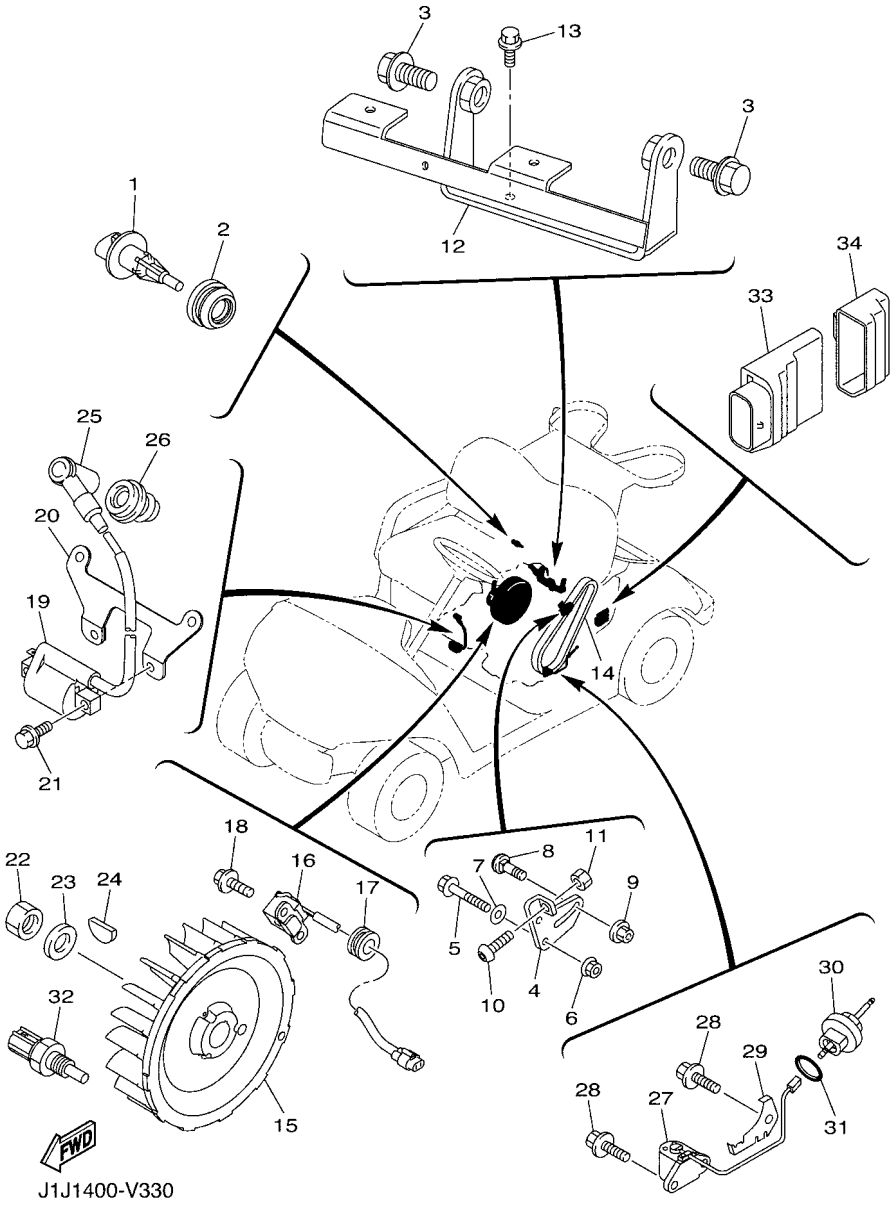


## FIG. 34 ELECTRICAL 1

| REF. NO. | PART NO. | DESCRIPTION | J0D5 | | | | | REMARKS |
|---|---|---|---|---|---|---|---|---|
| 1 | 5CA–85886–00 | SENSOR, AIR TEMPRATURE | 1 | | | | | |
| 2 | 5CA–14435–00 | GROMMET | 1 | | | | | |
| 3 | 95812–12030 | BOLT, FLANGE | 2 | | | | | |
| 4 | JW1–H1170–11 | TENSIONER ASSY | 1 | | | | | |
| 5 | 95812–08040 | BOLT, FLANGE | 2 | | | | | |
| 6 | 90179–08491 | NUT | 2 | | | | | |
| 7 | 90201–08043 | WASHER, PLATE | 2 | | | | | |
| 8 | 90109–08827 | BOLT | 1 | | | | | |
| 9 | 95702–08500 | NUT, FLANGE | 1 | | | | | |
| 10 | 92012–06030 | BOLT, BUTTON HEAD | 1 | | | | | |
| 11 | 95302–06600 | NUT, HEXAGON | 1 | | | | | |
| 12 | JN6–H1171–11 | BRACKET, STARTER GENERATOR | 1 | | | | | |
| 13 | 95822–08020 | BOLT, FLANGE | 2 | | | | | |
| 14 | JW1–H1173–02 | BELT | 1 | | | | | |
| 15 | JC0–85650–10 | ROTOR ASSY | 1 | | | | | |
| 16 | JB2–81670–00 | PICK-UP ASSY | 1 | | | | | |
| 17 | 90480–20564 | GROMMET | 1 | | | | | |
| 18 | 95822–06016 | BOLT, FLANGE | 2 | | | | | |
| 19 | 1S4–82310–02 | IGNITION COIL ASSY | 1 | | | | | |
| 20 | JC0–82316–00 | BRACKET, IGNITION COIL | 1 | | | | | |
| 21 | 95822–06016 | BOLT, FLANGE | 2 | | | | | |
| 22 | 95302–18600 | NUT, HEXAGON | 1 | | | | | |
| 23 | 90201–18620 | WASHER, PLATE | 1 | | | | | |
| 24 | 90280–04052 | KEY, WOODRUFF | 1 | | | | | |
| 25 | JN6–82370–00 | PLUG CAP ASSY | 1 | | | | | |
| 26 | JE8–82372–00 | SEAL, PLUG CAP | 1 | | | | | |
| 27 | JT0–85720–01 | OIL LEVEL GAUGE ASSY | 1 | | | | | |

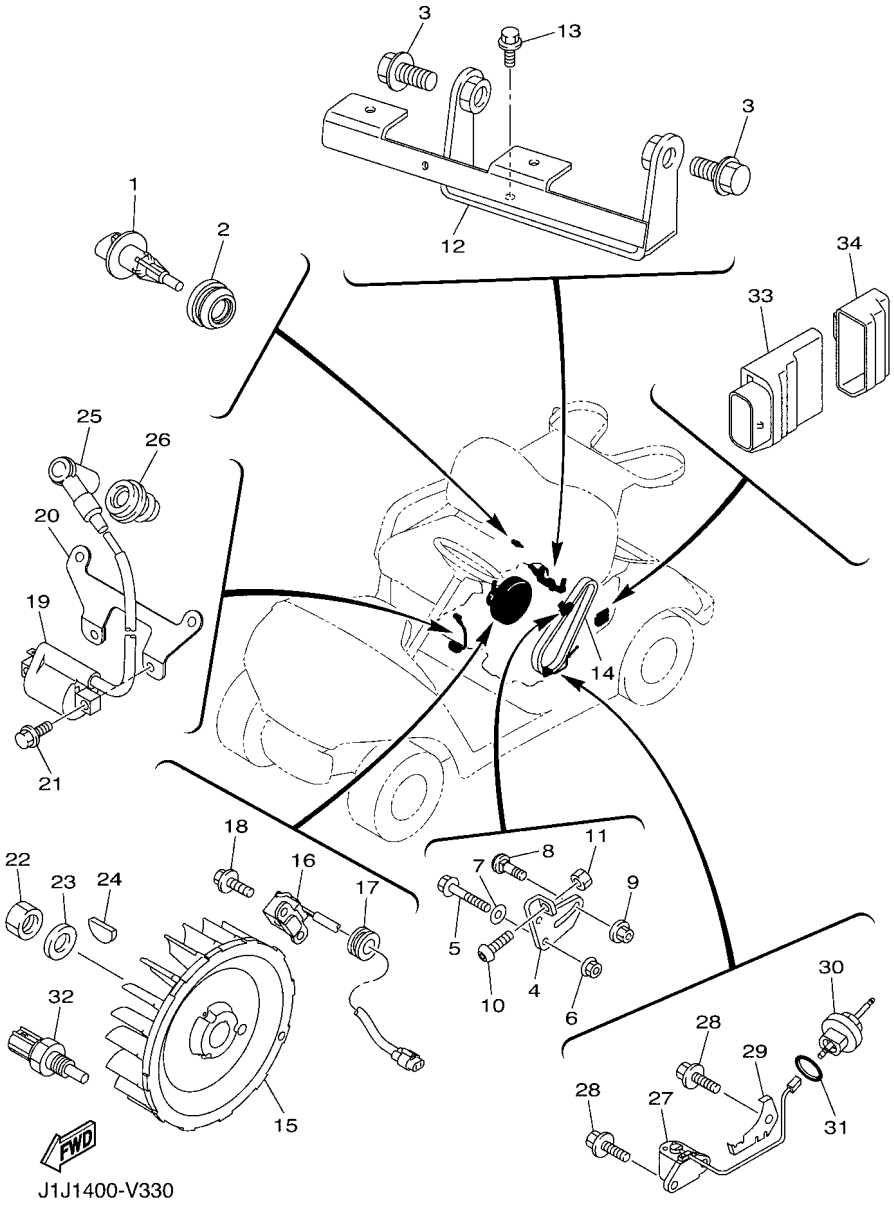


## FIG. 34 ELECTRICAL 1

| REF. NO. | PART NO. | DESCRIPTION | J0D5 | | | | | REMARKS |
|---|---|---|---|---|---|---|---|---|
| 28 | 95822–06012 | BOLT, FLANGE | 3 | | | | | |
| 29 | JT0–85724–00 | CLAMP | 1 | | | | | |
| 30 | JT0–15362–00 | PLUG, OIL LEVEL | 1 | | | | | |
| 31 | 93210–15414 | O-RING | 1 | | | | | |
| 32 | 4P9–83591–00 | THERMO UNIT | 1 | | | | | |
| 33 | J0B–H591A–10 | ENGINE CONTROL UNIT ASSY | 1 | | | | | |
| 34 | J0B–H5546–00 | BAND | 1 | | | | | |

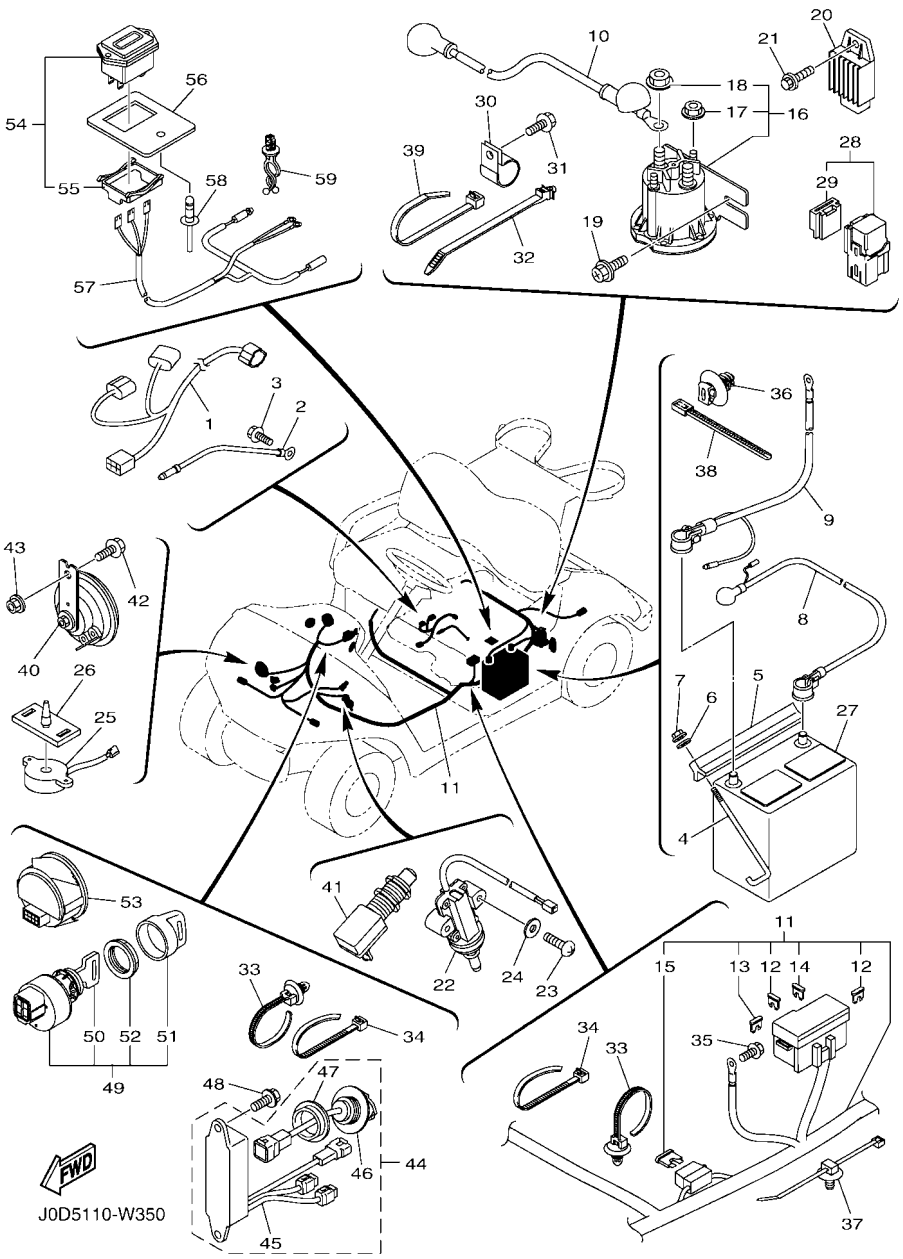


## FIG. 35 ELECTRICAL 2

| REF. NO. | PART NO. | DESCRIPTION | J0D5 | | | | | REMARKS |
|---|---|---|---|---|---|---|---|---|
| 1 | J0B–82149–01 | WIRE, LEAD 3 | 1 | | | | | |
| 2 | JC0–82519–00 | WIRE, EARTH LEAD | 1 | | | | | |
| 3 | 95822–06012 | BOLT, FLANGE | 1 | | | | | |
| 4 | JW1–H2133–00 | SCREW, FITTING | 2 | | | | | |
| 5 | J55–H2136–00 | PLATE, BATTERY FITTING | 1 | | | | | |
| 6 | 92902–06200 | WASHER | 2 | | | | | |
| 7 | 95702–06500 | NUT, FLANGE | 2 | | | | | |
| 8 | J0B–H2115–00 | WIRE, PLUS LEAD | 1 | | | | | |
| 9 | J0B–H2116–01 | WIRE, MINUS LEAD | 1 | | | | | |
| 10 | J0B–H2117–00 | WIRE, LEAD | 1 | | | | | |
| 11 | J0D–H2590–01 | WIRE HARNESS ASSY | 1 | | | | | |
| 12 | JW6–H554E–00 | .FUSE (10A) | 2 | | | | | |
| 13 | JW6–H554E–20 | .FUSE (25A) | 1 | | | | | |
| 14 | JW6–H554E–10 | .FUSE (15A) | 1 | | | | | |
| 15 | J0D–H2151–00 | .FUSE (5A) | 1 | | | | | |
| 16 | JW1–H1950–00 | RELAY ASSY | 1 | | | | | |
| 17 | 90179–05807 | .NUT | 2 | | | | | |
| 18 | 90179–08824 | .NUT | 2 | | | | | |
| 19 | 90105–06831 | BOLT, FLANGE | 2 | | | | | |
| 20 | JF2–81910–11 | VOLTAGE REGULATOR ASSY | 1 | | | | | |
| 21 | 90105–06870 | BOLT, FLANGE | 1 | | | | | |
| 22 | JF7–82817–22 | SWITCH | 1 | | | | | |
| 23 | 98502–05025 | SCREW, PAN HEAD | 2 | | | | | |
| 24 | 92902–05600 | WASHER, PLATE | 2 | | | | | |
| 25 | JR1–H3383–02 | BUZZER | 1 | | | | | |
| 26 | JN6–H3386–01 | STAY, BUZZER | 1 | | | | | |
| 27 | * | BATTERY ASSY (GC-24, 12V) | 1 | | | | | LM |

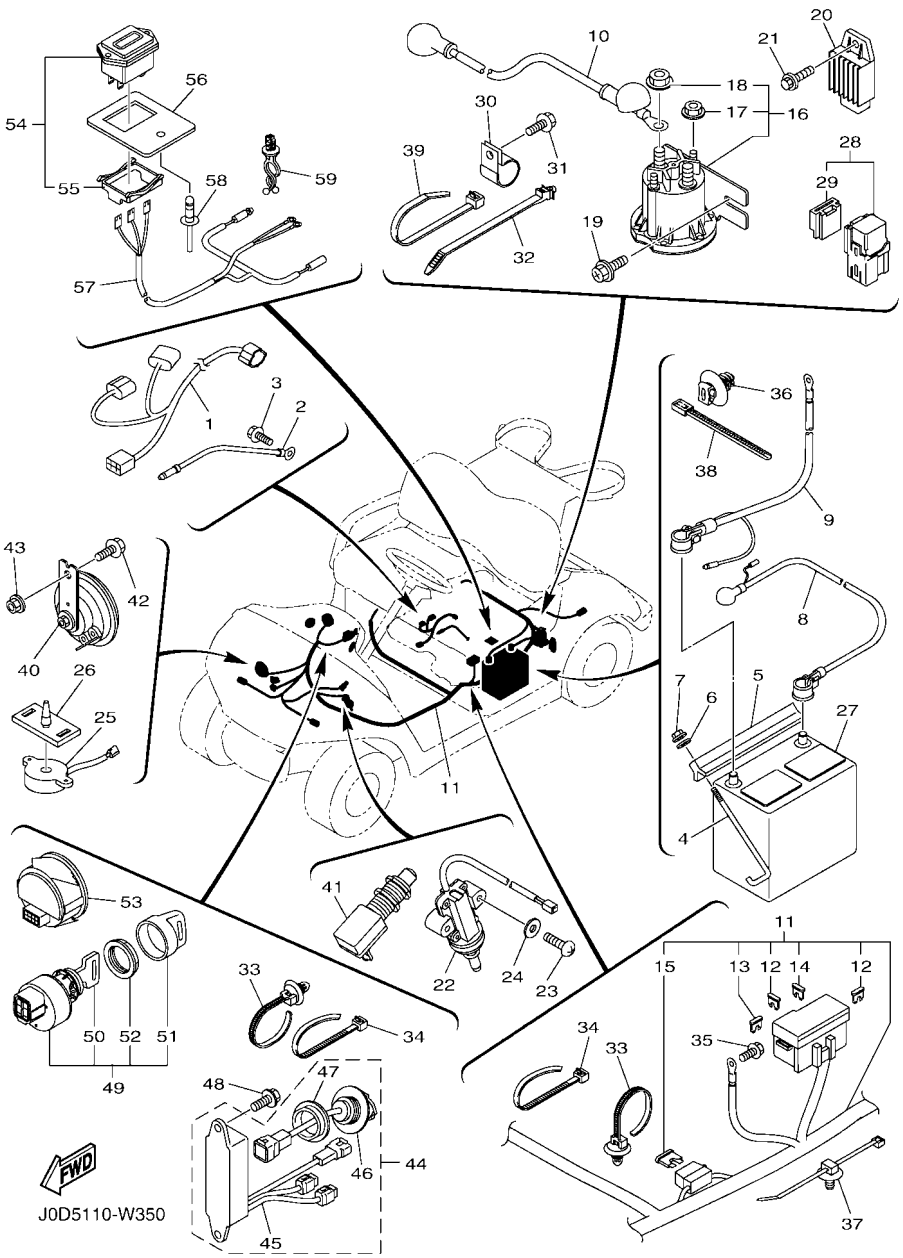


## FIG. 35 ELECTRICAL 2

| REF. NO. | PART NO. | DESCRIPTION | J0D5 | | | | | REMARKS |
|---|---|---|---|---|---|---|---|---|
| 28 | 1TP–81950–00 | RELAY ASSY (1TP-00) | 1 | | | | | |
| 29 | 5EA–81952–00 | .HOLDER, RELAY | 1 | | | | | |
| 30 | 90461–14108 | CLAMP | 1 | | | | | |
| 31 | 90119–06868 | BOLT, WITH WASHER | 1 | | | | | |
| 32 | 90464–09823 | CLAMP | 1 | | | | | |
| 33 | 90464–20005 | CLAMP | 3 | | | | | |
| 34 | 90464–48800 | CLAMP | 3 | | | | | |
| 35 | 90105–08867 | BOLT, FLANGE | 1 | | | | | |
| 36 | 5UG–F2465–10 | HOLDER | 1 | | | | | |
| 37 | 1NS–F1338–00 | CLAMP | 3 | | | | | |
| 38 | 90464–40825 | CLAMP | 2 | | | | | |
| 39 | 90464–51800 | CLAMP | 2 | | | | | 213X7.60 |
| 40 | 4LR–83371–11 | HORN | 1 | | | | | |
| 41 | JR6–H270X–00 | SWITCH | 1 | | | | | |
| 42 | 95822–06016 | BOLT, FLANGE | 1 | | | | | |
| 43 | 95702–06500 | NUT, FLANGE | 1 | | | | | |
| 44 | J0D–H21E0–03 | USB ASSY | 1 | | | | | |
| 45 | J0D–H21E1–01 | .PLUG, USB | 1 | | | | | |
| 46 | J0D–H21E2–01 | .CABLE, USB | 2 | | | | | |
| 47 | J0D–H2114–00 | .NUT | 2 | | | | | |
| 48 | 90119–06868 | BOLT, WITH WASHER | 2 | | | | | |
| 49 | JW6–H2510–00 | MAIN SWITCH ASSY | 1 | | | | | |
| 50 | JU6–H2511–10 | .KEY, MAIN SWITCH | 2 | | | | | |
| 51 | 5UG–H2579–00 | .CAP, KEY | 1 | | | | | |
| 52 | JU6–H2569–00 | .NUT, MAIN SWITCH | 1 | | | | | |
| 53 | JC0–H351C–10 | GAUGE 1 | 1 | | | | | |
| 54 | JN6–H351C–10 | GAUGE 1 | 1 | | | | | AP |

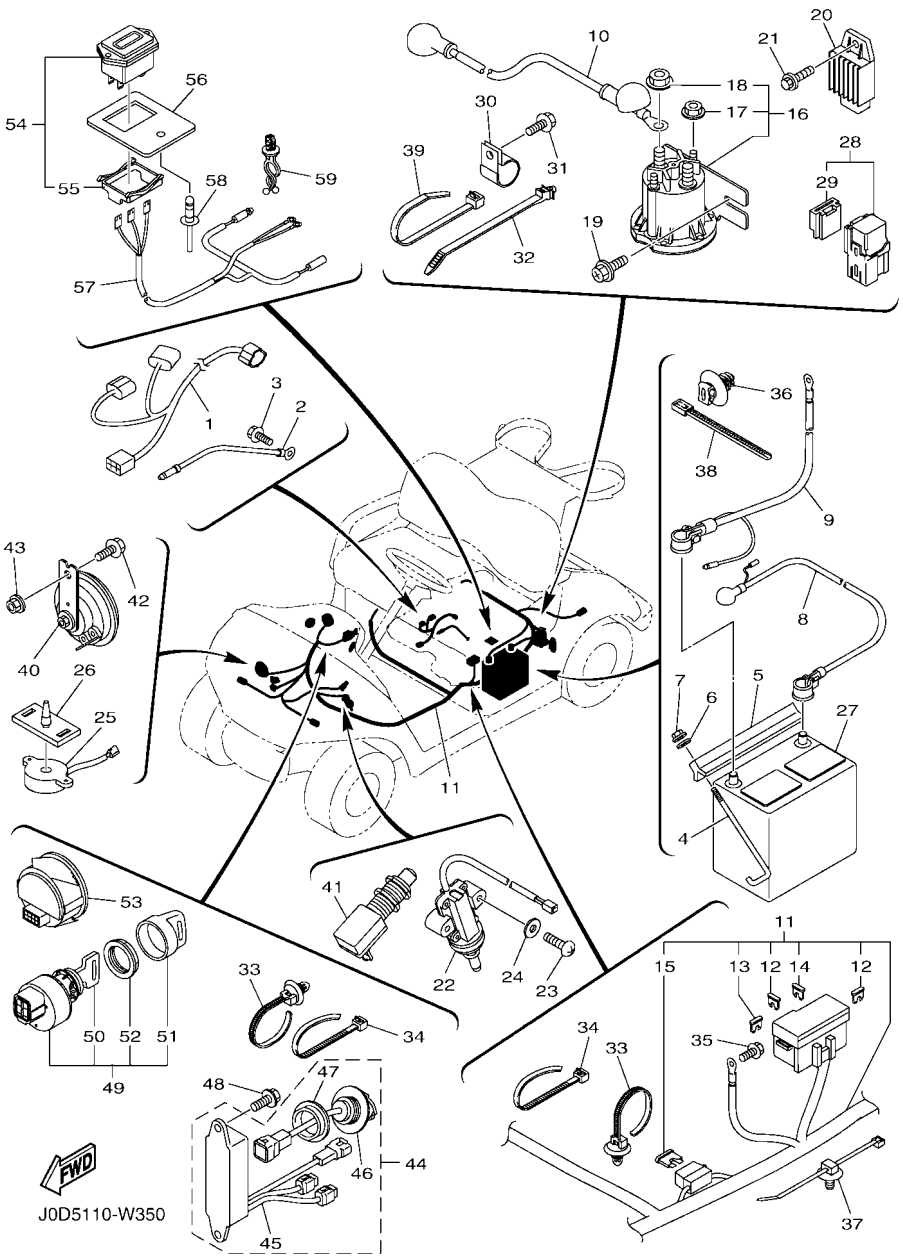


## FIG. 35 ELECTRICAL 2

| REF. NO. | PART NO. | DESCRIPTION | J0D5 | | | | | REMARKS |
|---|---|---|---|---|---|---|---|---|
| 55 | JW1–H1128–00 | .CLAMP | 1 | | | | | AP |
| 56 | J0B–F4881–00 | BRKT., METER | 1 | | | | | AP |
| 57 | JW1–H2386–10 | EXTENSION, WIRE HARNESS | 1 | | | | | AP |
| 58 | JW7–K7329–00 | RIVET | 1 | | | | | AP |
| 59 | 90464–12836 | CLAMP | 1 | | | | | AP |

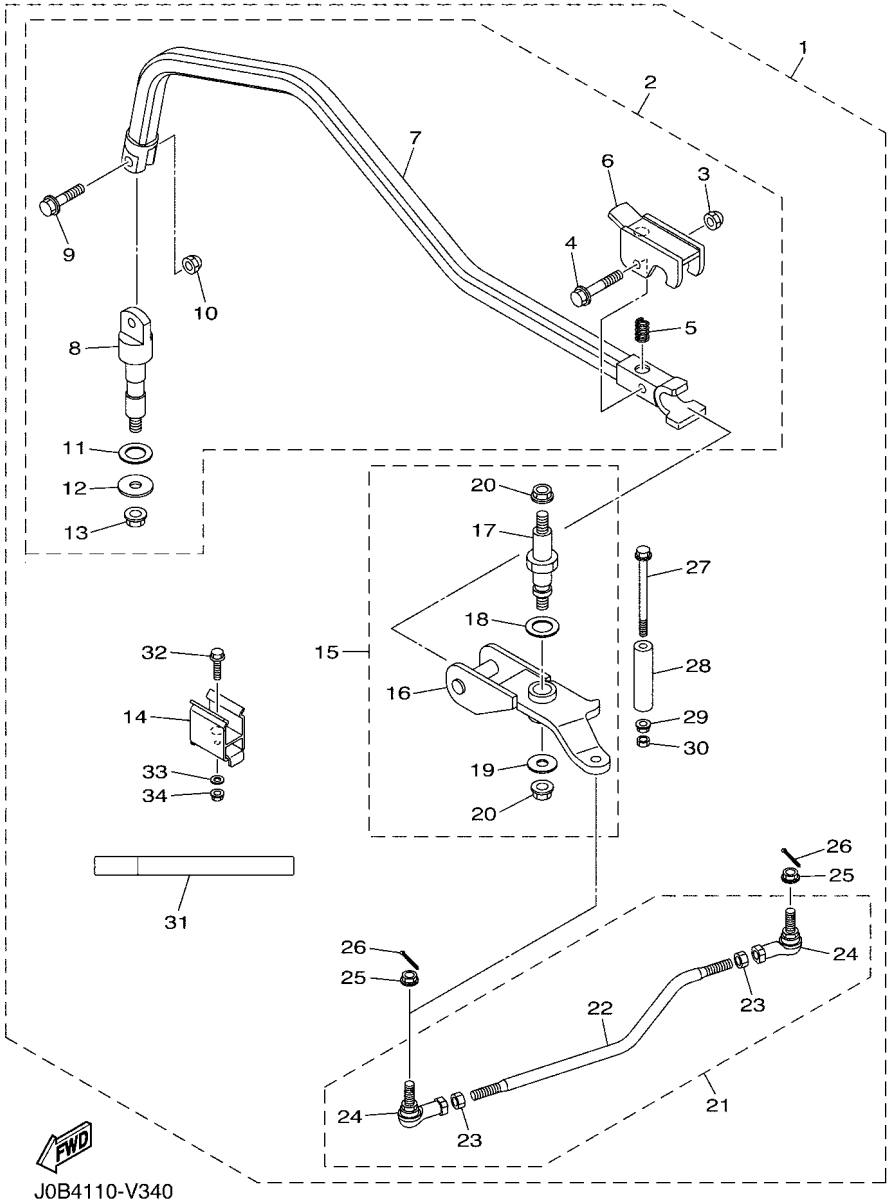

J0B4110-V340

## FIG. 36 ALTERNATE FOR CHASSIS

| REF. NO. | PART NO. | DESCRIPTION | J0D5 | | | | | REMARKS |
|---|---|---|---|---|---|---|---|---|
| 1 | J0B–F722B–A3 | BAR, TOW | 1 | | | | | AP |
| 2 | J0B–F389J–A0 | .DRAW BAR ASSY | 1 | | | | | |
| 3 | J0B–F4681–00 | ..NUT, CAP | 1 | | | | | |
| 4 | 95802–10050 | ..BOLT, FLANGE | 1 | | | | | |
| 5 | J0B–F178D–A0 | ..SPRING, HOOK | 1 | | | | | |
| 6 | J0B–F381J–A0 | ..BAR, HANDLE | 1 | | | | | |
| 7 | J0B–F7224–00 | ..BAR, PEDAL LINK | 1 | | | | | |
| 8 | J0B–F2141–00 | ..SHAFT, PIVOT | 1 | | | | | |
| 9 | 95802–10035 | ..BOLT, FLANGE | 1 | | | | | |
| 10 | J0B–F4681–00 | ..NUT, CAP | 1 | | | | | |
| 11 | J0B–F3418–00 | ..WASHER, SPECIAL | 1 | | | | | |
| 12 | 90201–128S4 | ..WASHER, PLATE | 1 | | | | | |
| 13 | 95602–12200 | ..NUT, SELF-LOCKING | 1 | | | | | |
| 14 | J0B–F5522–00 | .HOLDER | 1 | | | | | |
| 15 | J0B–F389K–A1 | .ARM PIVOT ASSY | 1 | | | | | |
| 16 | J0B–F389G–00 | ..ARM, PIVOT | 1 | | | | | |
| 17 | J0B–F3849–A0 | ..SHAFT 1 | 1 | | | | | |
| 18 | 90201–208S8 | ..WASHER, PLATE | 1 | | | | | |
| 19 | J0B–F3392–00 | ..WASHER, SPECIAL | 1 | | | | | |
| 20 | 95602–12200 | ..NUT, SELF-LOCKING | 2 | | | | | |
| 21 | J0B–F3880–A0 | .TIE ROD ASSEMBLY 3 | 1 | | | | | |
| 22 | J0B–F383A–00 | ..TIE ROD ASSEMBLY 3 | 1 | | | | | |
| 23 | 95302–10600 | ..NUT, HEXAGON | 2 | | | | | |
| 24 | J0B–F3841–A0 | ..JOINT, UNIVERSAL 1 | 2 | | | | | |
| 25 | 95602–10200 | .NUT, S/L FLANGE | 2 | | | | | |
| 26 | 91402–25020 | .PIN, COTTER | 2 | | | | | |
| 27 | 90105–088A9 | .BOLT, FLANGE | 1 | | | | | |

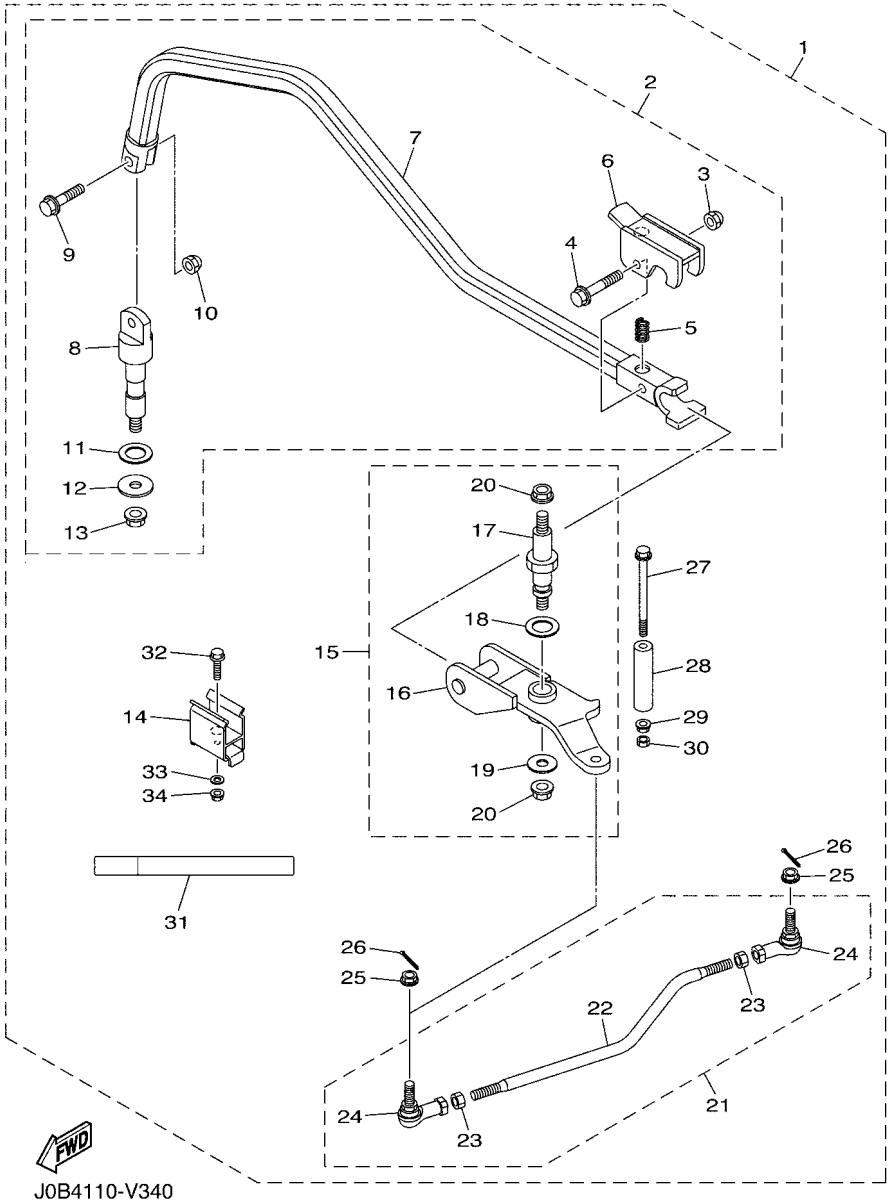


## FIG. 36 ALTERNATE FOR CHASSIS

| REF. NO. | PART NO. | DESCRIPTION | J0D5 | | | | | REMARKS |
|---|---|---|---|---|---|---|---|---|
| 28 | J0B–F3432–00 | .STOPPER, STEERING 1 | 1 | | | | | |
| 29 | 95602–08200 | .NUT, U FLANGE | 1 | | | | | |
| 30 | 95602–08100 | .NUT, U | 1 | | | | | |
| 31 | J0B–K7761–A0 | .LABEL, WARNING 1 | 1 | | | | | |
| 32 | 95812–06025 | .BOLT, FLANGE | 1 | | | | | |
| 33 | 90201–06102 | .WASHER, PLATE | 1 | | | | | |
| 34 | 95602–06200 | .NUT, SELF-LOCKING | 1 | | | | | |

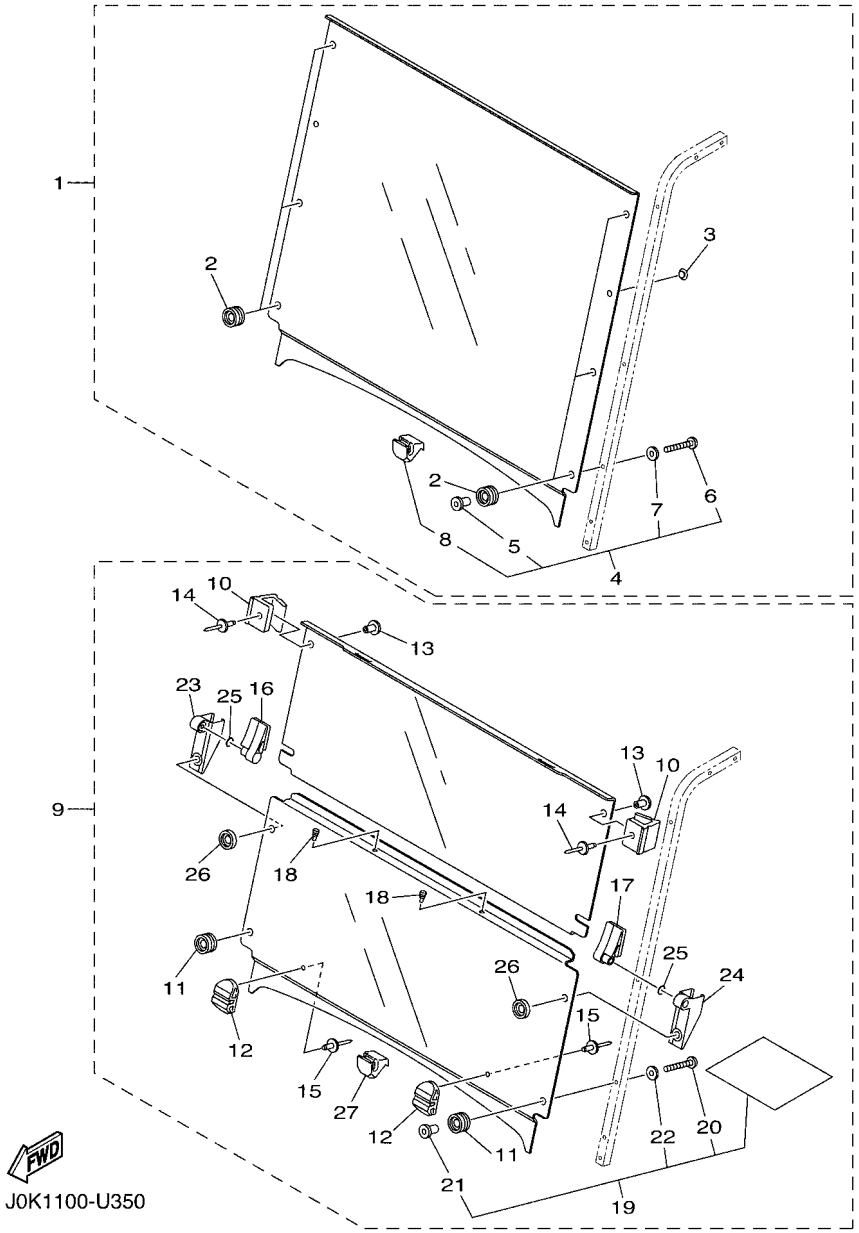


## FIG. 37 ALTERNATE FOR WINDSHIELD

| REF. NO. | PART NO. | DESCRIPTION | J0D5 | | | | | REMARKS |
|---|---|---|---|---|---|---|---|---|
| 1 | J0B–K7200–01 | WINDSHIELD ASSY | 1 | | | | | UR AP CLEAR |
| | J0B–K7200–11 | WINDSHIELD ASSY | 1 | | | | | UR AP SMOKE |
| 2 | J0B–K7237–00 | .GROMMET | 6 | | | | | |
| 3 | J0B–K7238–00 | .DAMPER | 2 | | | | | |
| 4 | J0B–K7240–01 | .WIND SHIELD HARDWARE KIT 1 | 1 | | | | | |
| 5 | J0B–K7217–00 | ..NUT, WIND SHIELD | 6 | | | | | |
| 6 | J0B–K7248–00 | ..SCREW 1 | 6 | | | | | |
| 7 | J0B–K7218–00 | ..WASHER 1 | 6 | | | | | |
| 8 | J0B–K838A–20 | ..RETAINER 1 | 1 | | | | | |
| 9 | J0B–K7200–24 | WINDSHIELD ASSY | 1 | | | | | UR AP CLEAR |
| | J0B–K7200–34 | WINDSHIELD ASSY | 1 | | | | | UR AP SMOKE |
| 10 | J0B–K7173–21 | .LEVER, LATCH 1 | 2 | | | | | |
| 11 | J0B–K7237–00 | .GROMMET | 2 | | | | | |
| 12 | J0B–K7257–20 | .GROMMET, W/S 3 | 2 | | | | | |
| 13 | J0G–K7155–C0 | .RIVET 1 | 2 | | | | | |
| 14 | J0G–K7156–C0 | .RIVET 2 | 2 | | | | | |
| 15 | J0B–K7155–20 | .RIVET 1 | 2 | | | | | |
| 16 | J0B–K7145–20 | .HINGE 1 | 1 | | | | | |
| 17 | J0B–K7146–20 | .HINGE 2 | 1 | | | | | |
| 18 | J0B–K7529–20 | .SPACER, BUMPER | 2 | | | | | |
| 19 | J0B–K7240–20 | .WIND SHIELD HARDWARE KIT 1 | 1 | | | | | |
| 20 | J0B–K7248–00 | ..SCREW 1 | 4 | | | | | |
| 21 | J0B–K7217–00 | ..NUT, WIND SHIELD | 4 | | | | | |
| 22 | J0B–K7218–00 | ..WASHER 1 | 4 | | | | | |
| 23 | J0B–K7147–20 | .HINGE 3 | 1 | | | | | |
| 24 | J0B–K7148–20 | .HINGE 4 | 1 | | | | | |
| 25 | J0B–F3147–20 | .O-RING | 2 | | | | | |

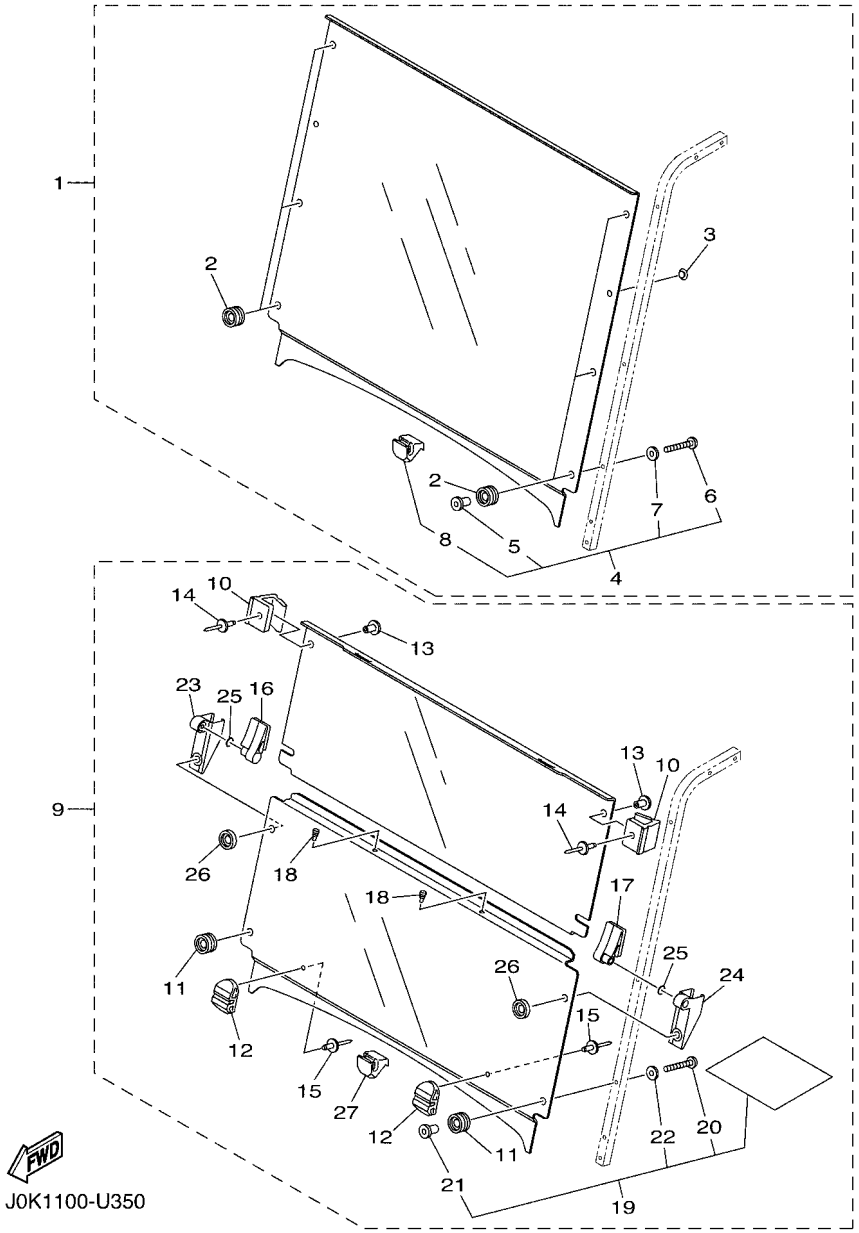


## FIG. 37 ALTERNATE FOR WINDSHIELD

| REF. NO. | PART NO. | DESCRIPTION | J0D5 | | | | | REMARKS |
|---|---|---|---|---|---|---|---|---|
| 26 | J0B–K7247–00 | .GROMMET, W/S 2 | 2 | | | | | |
| 27 | J0B–K838A–20 | .RETAINER 1 | 1 | | | | | |

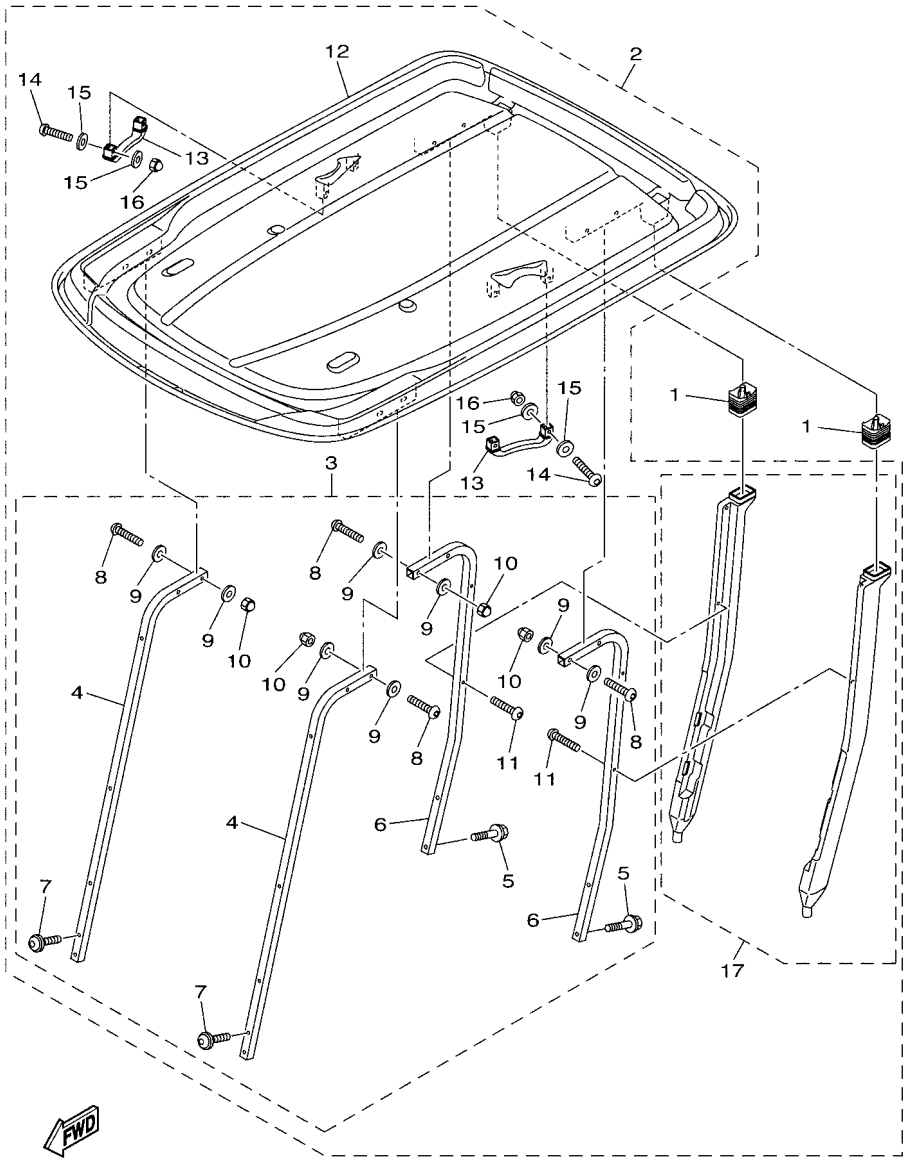


J0A2100-T370

## FIG. 38 ALTERNATE FOR SUN ROOF

| REF. NO. | PART NO. | DESCRIPTION | J0D5 | | | | | REMARKS |
|---|---|---|---|---|---|---|---|---|
| 1 | JW1–F414G–10 | SEAL | 2 | | | | | |
| 2 | J0B–K84A0–00 | SUN TOP KIT | 1 | | | | | UR AP TAN |
| | J0B–K84A0–10 | SUN TOP KIT | 1 | | | | | UR AP BLACK |
| 3 | J0B–K84A2–00 | .HARDWARE KIT, SUN TOP | 1 | | | | | |
| 4 | J0B–K8312–00 | ..SUPPORT, SUN ROOF 1 | 2 | | | | | |
| 5 | JW1–K8388–00 | ..BOLT, ROOF 1 | 4 | | | | | |
| 6 | JW1–K8313–01 | ..SUPPORT, SUN ROOF 2 | 2 | | | | | |
| 7 | J0B–K8388–00 | ..BOLT, ROOF 1 | 4 | | | | | |
| 8 | JU0–K8388–00 | ..BOLT, ROOF 1 | 8 | | | | | |
| 9 | JW1–F1549–01 | ..WASHER, FENDER MOLD | 16 | | | | | |
| 10 | JU0–K8398–00 | ..NUT, ROOF 1 | 8 | | | | | |
| 11 | JW1–K7387–00 | ..SCREW | 4 | | | | | |
| 12 | JW1–K8314–10 | .COVER, SUN ROOF | 1 | | | | | UR TAN |
| | JW1–K8314–21 | .COVER, SUN ROOF | 1 | | | | | UR BLACK |
| 13 | JW1–K8214–00 | .GRIP, HAND | 2 | | | | | |
| 14 | JU0–K8388–00 | .BOLT, ROOF 1 | 4 | | | | | |
| 15 | JW1–F1549–01 | .WASHER, FENDER MOLD | 8 | | | | | |
| 16 | JU0–K8398–00 | .NUT, ROOF 1 | 4 | | | | | |
| 17 | J0B–F417A–00 | .DRAIN TUBE ASSY | 1 | | | | | |

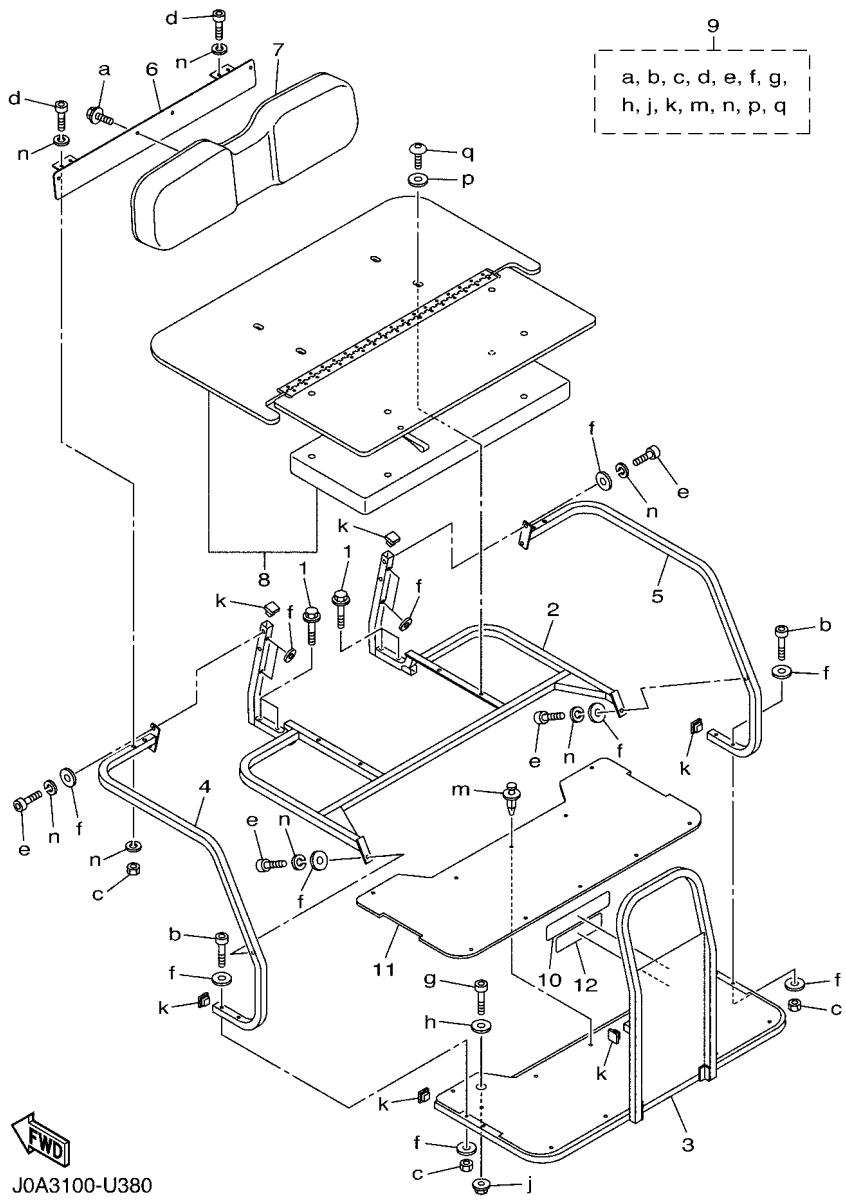


## FIG. 39 ALTERNATE FOR SEAT

| REF. NO. | PART NO. | DESCRIPTION | J0D5 | | | | | REMARKS |
|---|---|---|---|---|---|---|---|---|
| 1 | 90109–08178 | BOLT | 4 | | | | | |
| 2 | J0B–K8460–00 | SEAT FRAME COMP. | 1 | | | | | |
| 3 | J0B–K8477–00 | FLOOR ASSEMBLY | 1 | | | | | |
| 4 | J0B–K8473–00 | HANDRAIL ASSEMBLY (LH) | 1 | | | | | |
| 5 | J0B–K8474–00 | HANDRAIL ASSEMBLY (RH) | 1 | | | | | |
| 6 | J0B–K8432–00 | BRACKET, SEAT SUPPORT 2 | 1 | | | | | |
| 7 | J0B–K8402–00 | SEAT SUB ASSY, BACK | 1 | | | | | UR TAN |
| | J0B–K8402–10 | SEAT SUB ASSY, BACK | 1 | | | | | UR BLACK |
| 8 | J0B–K8480–00 | SEAT BOTTOM COMPLETE 1 | 1 | | | | | UR TAN |
| | J0B–K8480–10 | SEAT BOTTOM COMPLETE 1 | 1 | | | | | UR BLACK |
| 9 | J0B–F47E2–00 | HARDWARE KIT, TANDEM SEAT | 1 | | | | | |
| 10 | J0B–K8483–00 | LABEL WARNING | 1 | | | | | ENGLISH |
| 11 | J0B–K8466–00 | MAT, RUBBER | 1 | | | | | |
| 12 | J0B–F1696–00 | LABEL, CAUTION | 1 | | | | | ENGLISH |

| PART NO. | REF. NO. |
|---|---|
| JT0–11111–00 | 2 – 1 |
| JN6–11116–00 | 2 – 10 |
| JN6–11133–10 | 2 – 2 |
| JR7–11163–10 | 2 – 18 |
| JN6–11168–00 | 2 – 11 |
| JN6–11169–00 | 2 – 12 |
| JT0–11181–00 | 2 – 3 |
| JN6–11191–01 | 2 – 9 |
| JN6–11193–00 | 2 – 13 |
| 812–11198–00 | 9 – 6 |
| JN6–11400–00 | 3 – 1 |
| JN6–11454–10 | 3 – 8 |
| JR7–11610–00 | 3 – 3 |
| JR7–11610–10 | 3 – 3 |
| JR7–11610–20 | 3 – 3 |
| JR7–11631–00–A0 | 3 – 2 |
| 583–11633–00 | 3 – 4 |
| JR7–11635–00 | 3 – 2 |
| JR7–11636–00 | 3 – 2 |
| JN6–11650–10 | 3 – 6 |
| JN6–11654–10 | 3 – 7 |
| JN6–12111–10 | 4 – 2 |
| J38–12117–01 | 4 – 6 |
| J38–12118–00 | 4 – 7 |
| 4G0–12119–00 | 4 – 13 |
| 7RH–12121–10 | 4 – 3 |
| JN6–12151–10 | 4 – 8 |
| JN6–12153–10 | 4 – 4 |
| JR7–12154–10 | 4 – 12 |
| J38–12156–20 | 4 – 11 |
| 22F–12159–10 | 4 – 9 |
| JR7–12180–10 | 4 – 1 |
| JN6–12621–02 | 5 – 1 |
| JR7–12634–00 | 5 – 9 |
| JN6–12651–01 | 5 – 3 |
| JN6–12652–00 | 5 – 5 |
| JR7–12658–00 | 5 – 4 |
| JC0–13542–01 | 7 – 3 |
| JC0–13567–00 | 6 – 4 |
| JN6–13567–00 | 6 – 3 |
| | 6 – 5 |
| JC0–13595–00 | 6 – 1 |
| J0B–13750–01 | 7 – 1 |
| J0B–13770–00 | 7 – 5 |
| J0D–13907–01 | 15 – 9 |
| 52S–13938–00 | 7 – 6 |
| J0D–13971–01 | 15 – 13 |
| 52B–14137–00 | 7 – 7 |

| PART NO. | REF. NO. |
|---|---|
| 52B–14147–00 | 7 – 8 |
| 5CA–14147–00 | 7 – 9 |
| 3B4–14424–00 | 6 – 14 |
| 5CA–14435–00 | 34 – 2 |
| 7KY–14613–01 | 8 – 3 |
| JC0–15111–01 | 9 – 1 |
| J38–15361–00 | 9 – 18 |
| JT0–15362–00 | 34 – 30 |
| 796–15363–01 | 9 – 16 |
| JN6–15411–10 | 9 – 8 |
| JY2–15451–00 | 9 – 12 |
| J0B–19001–40 | 1 – 1 |
| JT0–21481–00 | 10 – 5 |
| 401–22128–01 | 13 – 16 |
| 2NL–23448–00 | 13 – 9 |
| 5KM–23448–00 | 11 – 39 |
| 2NL–23517–00 | 13 – 11 |
| 5UG–23517–10 | 11 – 40 |
| 2HR–23526–00 | 11 – 43 |
| | 13 – 3 |
| JW8–23841–01 | 14 – 26 |
| 4WM–24180–00 | 15 – 15 |
| BG4–24362–00 | 15 – 20 |
| 1S3–24486–00 | 15 – 11 |
| JC0–24491–00 | 15 – 10 |
| J38–27204–00 | 18 – 3 |
| J38–27205–00 | 18 – 14 |
| J55–27260–00 | 18 – 19 |
| J55–27270–00 | 18 – 8 |
| J10–27282–00 | 18 – 5 |
| | 18 – 16 |
| J0B–27951–00 | 19 – 1 |
| J38–27959–00 | 19 – 5 |
| JB2–81670–00 | 34 – 16 |
| JF2–81910–11 | 35 – 20 |
| 1TP–81950–00 | 35 – 28 |
| 5EA–81952–00 | 35 – 29 |
| J0B–82149–01 | 35 – 1 |
| 1S4–82310–02 | 34 – 19 |
| JC0–82316–00 | 34 – 20 |
| JN6–82370–00 | 34 – 25 |
| JE8–82372–00 | 34 – 26 |
| 1C7–82380–00 | 7 – 2 |
| JC0–82519–00 | 35 – 2 |
| JN3–82617–01 | 23 – 19 |
| JF7–82817–22 | 35 – 22 |
| 4LR–83371–11 | 35 – 40 |
| 4P9–83591–00 | 34 – 32 |

| PART NO. | REF. NO. |
|---|---|
| JC0–85650–10 | 34 – 15 |
| JT0–85720–01 | 34 – 27 |
| JT0–85724–00 | 34 – 29 |
| 5CA–85886–00 | 34 – 1 |
| J0B–E1166–00 | 2 – 16 |
| JW8–E1923–00 | 22 – 5 |
| J0B–E2691–00 | 5 – 7 |
| J0B–E4411–01 | 6 – 13 |
| J0B–E4412–00 | 6 – 10 |
| J0B–E4413–00 | 6 – 16 |
| J0B–E4430–10 | 8 – 7 |
| J0B–E4437–00 | 6 – 21 |
| J0B–E4451–01 | 6 – 11 |
| J0B–E4453–01 | 6 – 23 |
| JU0–E445E–00 | 6 – 12 |
| J0B–E4710–03 | 8 – 1 |
| JW1–E4713–00 | 8 – 4 |
| J0B–E5471–00 | 6 – 18 |
| JW8–E7688–01 | 21 – 7 |
| J0B–F125J–00 | 12 – 30 |
| 1NS–F1338–00 | 35 – 37 |
| JW8–F135J–00 | 20 – 7 |
| | 21 – 4 |
| J0B–F1411–00 | 10 – 1 |
| J0B–F1419–01 | 10 – 4 |
| J0B–F1436–00 | 8 – 2 |
| J0B–F1485–00 | 10 – 8 |
| J0B–F1531–00 | 11 – 3 |
| JW1–F1549–01 | 38 – 9 |
| | 38 – 15 |
| J0B–F1696–00 | 39 – 12 |
| J0B–F1738–00 | 12 – 9 |
| | 12 – 10 |
| | 12 – 11 |
| | 12 – 29 |
| | 27 – 18 |
| | 27 – 23 |
| | 31 – 9 |
| | 31 – 11 |
| JW1–F1738–00 | 15 – 7 |
| J0D–F1781–40 | 27 – 27 |
| J0D–F1781–50 | 27 – 27 |
| J0D–F1782–40 | 27 – 28 |
| J0D–F1782–50 | 27 – 28 |
| J0B–F178D–A0 | 36 – 5 |
| J0B–F2110–02 | 11 – 1 |
| J0B–F2127–00 | 12 – 14 |
| J0B–F2141–00 | 36 – 8 |

| PART NO. | REF. NO. |
|---|---|
| J0B–F2171–01 | 11 – 37 |
| J0B–F2210–00 | 11 – 9 |
| | 11 – 22 |
| 5UG–F2465–10 | 35 – 36 |
| J0B–F2501–30 | 12 – 1 |
| J0B–F253B–01 | 12 – 4 |
| J0B–F255G–00 | 12 – 2 |
| J0B–F2574–00 | 22 – 53 |
| J0B–F258E–10 | 12 – 12 |
| J0B–F258R–01 | 12 – 17 |
| J0B–F2873–01 | 27 – 25 |
| J0B–F2874–01 | 27 – 26 |
| J0B–F3113–00 | 11 – 14 |
| | 11 – 27 |
| J0B–F3123–10 | 12 – 21 |
| JW7–F312H–00 | 16 – 5 |
| J0B–F3133–10 | 12 – 25 |
| J0G–F3145–00 | 17 – 49 |
| J0B–F3147–20 | 37 – 25 |
| JW1–F3183–00 | 14 – 12 |
| JW8–F3183–00 | 17 – 17 |
| J0B–F3350–00 | 13 – 14 |
| J0B–F3390–00 | 13 – 19 |
| J0B–F3392–00 | 36 – 19 |
| JW1–F3400–01 | 14 – 10 |
| J0B–F3418–00 | 36 – 11 |
| J0B–F3432–00 | 36 – 28 |
| J0B–F3447–00 | 27 – 2 |
| | 27 – 9 |
| | 27 – 22 |
| JU0–F3511–20 | 13 – 4 |
| JW1–F3512–00 | 13 – 5 |
| JU0–F3521–20 | 13 – 12 |
| 5UG–F3527–01 | 14 – 20 |
| J0B–F3570–10 | 13 – 1 |
| J0G–F3811–00 | 14 – 1 |
| JW1–F3812–00 | 14 – 13 |
| J0B–F381J–A0 | 36 – 6 |
| JW1–F3822–01 | 14 – 28 |
| JU0–F3828–10 | 14 – 4 |
| 1P0–F3833–00 | 14 – 25 |
| JW1–F3837–00 | 14 – 21 |
| J0B–F3838–00 | 14 – 6 |
| J0B–F383A–00 | 36 – 22 |
| J0B–F3841–A0 | 36 – 24 |
| 5UG–F3844–00 | 14 – 19 |
| J0B–F3849–A0 | 36 – 17 |
| JU0–F3857–20 | 14 – 3 |

| PART NO. | REF. NO. |
|---|---|
| JU0–F3857–20 | 14 – 5 |
| JW1–F3866–00 | 14 – 23 |
| JW1–F387A–00 | 14 – 11 |
| JW1–F387E–00 | 14 – 14 |
| 5UG–F387F–00 | 14 – 17 |
| 5UG–F387G–00 | 14 – 15 |
| 5UG–F387J–00 | 14 – 18 |
| 5UG–F387K–00 | 14 – 16 |
| J0B–F3880–A0 | 36 – 21 |
| JW1–F3894–00 | 14 – 24 |
| J0B–F389G–00 | 36 – 16 |
| J0B–F389J–A0 | 36 – 2 |
| J0B–F389K–A1 | 36 – 15 |
| JC0–F4111–02 | 15 – 1 |
| JW1–F4112–00 | 15 – 3 |
| JW1–F414G–10 | 38 – 1 |
| J0B–F4161–00 | 26 – 2 |
| 7CC–F4170–10 | 15 – 14 |
| J0B–F417A–00 | 38 – 17 |
| J0B–F419A–00 | 15 – 23 |
| J0B–F4217–00 | 15 – 5 |
| J0B–F4313–00 | 15 – 19 |
| J0B–F4314–00 | 15 – 17 |
| J0B–F4316–00 | 15 – 18 |
| J0B–F4317–10 | 15 – 21 |
| JU5–F4375–00 | 15 – 4 |
| JW8–F4486–00 | 17 – 44 |
| | 17 – 48 |
| JW1–F4610–11 | 15 – 2 |
| JW1–F467K–00 | 14 – 22 |
| J0B–F4681–00 | 36 – 3 |
| | 36 – 10 |
| J0B–F47E2–00 | 39 – 9 |
| JW8–F47E3–00 | 22 – 36 |
| J0B–F4881–00 | 35 – 56 |
| JC1–F5100–01 | 13 – 31 |
| | 24 – 5 |
| JC1–F5103–00 | 13 – 21 |
| JW8–F5118–00 | 24 – 7 |
| JN6–F5118–01 | 13 – 29 |
| J0B–F518F–00 | 24 – 9 |
| J0B–F518G–00 | 24 – 10 |
| J0B–F5310–10 | 24 – 1 |
| J0B–F537W–00 | 11 – 16 |
| | 11 – 29 |
| J0B–F53A1–01 | 11 – 10 |
| | 11 – 23 |
| JW8–F5415–00 | 17 – 26 |

| PART NO. | REF. NO. |
|---|---|
| J0B–F5522–00 | 36 – 14 |
| JW9–F5666–00 | 17 – 13 |
| J0G–F5671–00 | 17 – 4 |
| JW9–F5673–00 | 17 – 45 |
| JW8–F5681–10 | 16 – 6 |
| JN6–F5685–01 | 16 – 7 |
| J0G–F5922–00 | 17 – 43 |
| JC0–F6280–11 | 30 – 1 |
| JC0–F6291–11 | 30 – 2 |
| J0B–F6311–01 | 17 – 51 |
| J0B–F6312–00 | 6 – 15 |
| JW8–F6314–00 | 17 – 22 |
| J0B–F6341–00 | 16 – 1 |
| J0B–F6351–00 | 16 – 2 |
| JW8–F639N–00 | 17 – 10 |
| JW8–F7118–00 | 17 – 41 |
| JW8–F7119–00 | 17 – 29 |
| JW8–F7121–00 | 17 – 14 |
| J0G–F7200–02 | 17 – 2 |
| JW8–F7213–20 | 17 – 34 |
| JW8–F7217–00 | 17 – 32 |
| J0G–F7218–00 | 17 – 11 |
| JW9–F7221–00 | 17 – 15 |
| J0B–F7224–00 | 36 – 7 |
| JW9–F7228–00 | 17 – 24 |
| J0B–F722B–A3 | 36 – 1 |
| JU0–F722H–00 | 22 – 7 |
| JW9–F7231–10 | 17 – 19 |
| JW9–F7232–00 | 17 – 20 |
| JU0–F723F–00 | 22 – 35 |
| JW9–F7245–10 | 17 – 30 |
| JW9–F7246–20 | 17 – 46 |
| JW8–F7280–10 | 18 – 1 |
| JW8–F7281–00 | 18 – 4 |
| | 18 – 15 |
| JW8–F7286–00 | 18 – 9 |
| | 18 – 20 |
| JW8–F7290–10 | 18 – 12 |
| J0G–F7313–00 | 17 – 12 |
| JW8–F7316–01 | 17 – 31 |
| JW8–F7317–00 | 17 – 40 |
| JW8–F7318–00 | 17 – 21 |
| JW8–F7322–00 | 17 – 16 |
| J0D–F7411–01 | 12 – 7 |
| J0B–F7413–01 | 12 – 6 |
| J0G–F7416–00 | 17 – 9 |
| JW8–F7426–01 | 17 – 18 |
| JW8–F7434–00 | 17 – 39 |

| PART NO. | REF. NO. |
|---|---|
| JW8–F7438–00 | 17 – 38 |
| J0G–F7445–10 | 17 – 33 |
| J0G–F7814–00 | 17 – 23 |
| JW8–F7814–21 | 17 – 3 |
| J0G–F7825–00 | 17 – 28 |
| J0G–F7850–20 | 17 – 1 |
| J0G–F7853–10 | 17 – 35 |
| J0G–F7854–00 | 17 – 5 |
| J0G–F7871–01 | 17 – 36 |
| J0G–F7872–00 | 17 – 37 |
| J0G–F815H–10 | 17 – 42 |
| J0B–F8218–00 | 11 – 4 |
| J0B–F8228–00 | 11 – 5 |
| J0B–F8238–00 | 11 – 6 |
| J0B–F8268–00 | 11 – 7 |
| J0B–F8278–00 | 11 – 8 |
| JC0–F831W–20 | 30 – 3 |
| JW8–F8323–00 | 17 – 25 |
| JW8–F8331–00 | 17 – 47 |
| JC0–F834N–20 | 30 – 4 |
| JW8–F8363–00 | 17 – 8 |
| J0B–G1148–00 | 22 – 33 |
| J0B–G1297–00 | 22 – 23 |
| J0B–G2391–00 | 22 – 6 |
| JW8–G2541–00 | 22 – 50 |
| JC1–G2544–00 | 22 – 41 |
| J0B–G3127–00 | 22 – 10 |
| J0B–G3812–00 | 22 – 11 |
| JW8–G4189–00 | 20 – 6 |
| J0B–G5148–00 | 22 – 44 |
| JW8–G5282–00 | 20 – 18 |
| JW8–G5378–00 | 22 – 38 |
| JW8–G5531–00 | 21 – 9 |
| JW8–G5618–00 | 20 – 10 |
| | 20 – 15 |
| JW8–G5621–00 | 20 – 16 |
| JW8–G5677–00 | 21 – 12 |
| JW8–G5697–20 | 21 – 15 |
| J0B–G580H–00 | 22 – 18 |
| J0B–G6153–00 | 22 – 27 |
| JW8–G6159–00 | 21 – 8 |
| J0B–G6164–00 | 22 – 9 |
| J0B–G6201–01 | 20 – 1 |
| JW8–G6202–24 | 21 – 1 |
| JW8–G6205–22 | 20 – 9 |
| JW8–G6210–01 | 20 – 2 |
| J0B–G6220–01 | 20 – 3 |
| J0B–G6231–00 | 20 – 17 |

| PART NO. | REF. NO. |
|---|---|
| JW8–G6236–20 | 20 – 12 |
| JW8–G6237–20 | 20 – 13 |
| J0D–G6241–01 | 20 – 21 |
| JW8–G6249–00 | 20 – 19 |
| JW8–G624A–00 | 20 – 4 |
| JW8–G624B–00 | 21 – 5 |
| JW8–G6251–21 | 20 – 8 |
| JW8–G6253–00 | 20 – 5 |
| JW8–G6260–23 | 21 – 2 |
| JW8–G6270–21 | 21 – 3 |
| JW8–G6275–10 | 21 – 11 |
| JW8–G6284–10 | 21 – 6 |
| J0D–G6301–01 | 22 – 2 |
| J0B–G6314–00 | 22 – 31 |
| J0B–G6316–00 | 22 – 24 |
| J0D–G6320–00 | 22 – 8 |
| J0B–G6326–00 | 22 – 25 |
| J0D–G6327–00 | 22 – 30 |
| J0B–G633E–00 | 22 – 3 |
| J0B–G633G–00 | 22 – 26 |
| JN3–G6344–00 | 22 – 45 |
| J0B–G6355–00 | 22 – 43 |
| J0B–G6356–00 | 22 – 20 |
| J0B–G6371–00 | 23 – 3 |
| J0B–G6372–10 | 23 – 17 |
| JW8–G6374–00 | 21 – 10 |
| JN3–G6376–00 | 23 – 10 |
| JU0–G6376–00 | 22 – 13 |
| JN3–G6381–00 | 23 – 9 |
| J0B–G6382–00 | 23 – 5 |
| JW8–G6383–10 | 23 – 4 |
| J0B–G638A–00 | 22 – 29 |
| J0B–G638E–00 | 22 – 28 |
| J0B–G6410–00 | 22 – 40 |
| JN3–G6432–00 | 22 – 32 |
| JW3–G6521–00 | 24 – 6 |
| J0B–G6555–00 | 22 – 12 |
| J0B–G6556–00 | 22 – 51 |
| JW8–G7339–00 | 20 – 20 |
| J0B–G8330–00 | 23 – 2 |
| J0B–H1100–00 | 32 – 1 |
| J0B–H1111–00 | 32 – 13 |
| J0B–H1115–00 | 32 – 17 |
| J0B–H1119–00 | 32 – 12 |
| JW1–H1128–00 | 35 – 55 |
| J0B–H1139–00 | 32 – 14 |
| J0B–H1150–00 | 32 – 9 |
| J0B–H1157–00 | 32 – 16 |

| PART NO. | REF. NO. |
|---|---|
| J0B–H1158–00 | 32 – 6 |
| J0B–H1160–00 | 32 – 10 |
| J0B–H1161–00 | 32 – 4 |
| J0B–H1163–00 | 32 – 8 |
| J0B–H1165–00 | 32 – 5 |
| J0B–H1166–00 | 32 – 11 |
| JW1–H1170–11 | 34 – 4 |
| JN6–H1171–11 | 34 – 12 |
| JW1–H1173–02 | 34 – 14 |
| J0B–H1353–00 | 32 – 2 |
| J0B–H1554–00 | 32 – 15 |
| JW9–H1674–00 | 31 – 1 |
| JW1–H1950–00 | 35 – 16 |
| J0D–H2114–00 | 35 – 47 |
| J0B–H2115–00 | 35 – 8 |
| J0B–H2116–01 | 35 – 9 |
| J0B–H2117–00 | 35 – 10 |
| JW1–H2133–00 | 35 – 4 |
| J55–H2136–00 | 35 – 5 |
| J0D–H2151–00 | 35 – 15 |
| J0D–H21E0–03 | 35 – 44 |
| J0D–H21E1–01 | 35 – 45 |
| J0D–H21E2–01 | 35 – 46 |
| J0B–H2370–00 | 26 – 13 |
| JW1–H2386–10 | 35 – 57 |
| JW6–H2510–00 | 35 – 49 |
| JU6–H2511–10 | 35 – 50 |
| J0B–H2534–00 | 32 – 3 |
| JU6–H2569–00 | 35 – 52 |
| 5UG–H2579–00 | 35 – 51 |
| J0D–H2590–01 | 35 – 11 |
| JR6–H270X–00 | 35 – 41 |
| J0D–H333B–00 | 26 – 14 |
| J0D–H334B–00 | 26 – 15 |
| JR1–H3383–02 | 35 – 25 |
| JN6–H3386–01 | 35 – 26 |
| JC0–H351C–10 | 35 – 53 |
| JN6–H351C–10 | 35 – 54 |
| J0D–H3547–00 | 33 – 8 |
| | 33 – 20 |
| J0D–H360G–00 | 27 – 31 |
| J0D–H360H–00 | 27 – 32 |
| J0D–H4110–01 | 33 – 1 |
| J0D–H411T–01 | 33 – 3 |
| J0D–H411U–01 | 33 – 15 |
| J0D–H4170–01 | 33 – 13 |
| J0D–H4195–00 | 33 – 10 |
| | 33 – 22 |

| PART NO. | REF. NO. |
|---|---|
| J0D–H4300–00 | 33 – 2 |
| | 33 – 14 |
| J0D–H431U–00 | 33 – 26 |
| J0D–H4385–00 | 33 – 4 |
| J0D–H4386–00 | 33 – 16 |
| J0D–H4387–00 | 33 – 33 |
| JC0–H4514–01 | 33 – 28 |
| | 33 – 35 |
| J0D–H4524–00 | 33 – 9 |
| | 33 – 21 |
| J0D–H4526–00 | 33 – 6 |
| | 33 – 18 |
| J0D–H4700–01 | 33 – 27 |
| | 33 – 34 |
| J0D–H4710–01 | 33 – 25 |
| J0D–H4718–00 | 33 – 29 |
| | 33 – 36 |
| J0D–H4726–00 | 33 – 7 |
| | 33 – 19 |
| J0D–H4730–01 | 33 – 32 |
| J0D–H5490–01 | 33 – 5 |
| | 33 – 17 |
| J0B–H5546–00 | 34 – 34 |
| JW6–H554E–00 | 35 – 12 |
| JW6–H554E–10 | 35 – 14 |
| JW6–H554E–20 | 35 – 13 |
| J0B–H591A–10 | 34 – 33 |
| J0B–HA906–00 | 32 – 7 |
| J0B–K7115–00 | 14 – 36 |
| J0B–K7145–20 | 37 – 16 |
| J0B–K7146–20 | 37 – 17 |
| J0B–K7147–20 | 37 – 23 |
| J0B–K7148–20 | 37 – 24 |
| J0B–K7155–20 | 37 – 15 |
| J0G–K7155–C0 | 37 – 13 |
| J0G–K7156–C0 | 37 – 14 |
| J0B–K7173–21 | 37 – 10 |
| JC0–K7178–00 | 30 – 6 |
| J0B–K7200–01 | 37 – 1 |
| J0B–K7200–11 | 37 – 1 |
| J0B–K7200–24 | 37 – 9 |
| J0B–K7200–34 | 37 – 9 |
| JC0–K7212–10 | 30 – 8 |
| J0B–K7217–00 | 37 – 5 |
| | 37 – 21 |
| JW1–K7217–10 | 30 – 7 |
| J0B–K7218–00 | 37 – 7 |
| | 37 – 22 |

| PART NO. | REF. NO. |
|---|---|
| J0B–K7237–00 | 37 – 2 |
| | 37 – 11 |
| J0B–K7238–00 | 37 – 3 |
| J0B–K7240–01 | 37 – 4 |
| J0B–K7240–20 | 37 – 19 |
| J0B–K7247–00 | 37 – 26 |
| J0B–K7248–00 | 37 – 6 |
| | 37 – 20 |
| J0B–K7257–20 | 37 – 12 |
| JW7–K7329–00 | 15 – 24 |
| | 27 – 17 |
| | 35 – 58 |
| J0B–K7363–00 | 14 – 35 |
| J0B–K7387–00 | 14 – 33 |
| JW1–K7387–00 | 38 – 11 |
| JW1–K7387–20 | 30 – 5 |
| J0B–K7389–00 | 29 – 5 |
| J0B–K7510–01 | 25 – 1 |
| J0B–K7529–20 | 37 – 18 |
| J0B–K7540–00 | 25 – 7 |
| JU0–K7573–00 | 26 – 3 |
| JW1–K7741–00 | 27 – 29 |
| J0B–K7761–A0 | 36 – 31 |
| J0D–K7762–20 | 14 – 37 |
| J0D–K7762–30 | 14 – 37 |
| J0D–K7762–40 | 14 – 37 |
| J0D–K7768–00 | 26 – 8 |
| J0D–K7768–10 | 26 – 8 |
| J0D–K7768–20 | 26 – 8 |
| J0D–K7768–30 | 26 – 8 |
| J0D–K7768–40 | 26 – 8 |
| J0D–K8111–00 | 27 – 1 |
| J0D–K8111–30 | 27 – 1 |
| J0D–K8111–70 | 27 – 1 |
| J0D–K8111–80 | 27 – 1 |
| J0D–K8111–90 | 27 – 1 |
| J0D–K8111–A0 | 27 – 1 |
| J0D–K8111–T0 | 27 – 1 |
| J0D–K8111–U0 | 27 – 1 |
| J0D–K8111–V0 | 27 – 1 |
| J0D–K8112–00 | 27 – 8 |
| J0D–K8112–30 | 27 – 8 |
| J0D–K8112–70 | 27 – 8 |
| J0D–K8112–80 | 27 – 8 |
| J0D–K8112–90 | 27 – 8 |
| J0D–K8112–A0 | 27 – 8 |
| J0D–K8112–T0 | 27 – 8 |
| J0D–K8112–U0 | 27 – 8 |

| PART NO. | REF. NO. |
|---|---|
| J0D–K8112–V0 | 27 – 8 |
| J0D–K8114–01 | 26 – 6 |
| J0D–K8115–00 | 26 – 1 |
| J0D–K8115–30 | 26 – 1 |
| J0D–K8115–70 | 26 – 1 |
| J0D–K8115–80 | 26 – 1 |
| J0D–K8115–90 | 26 – 1 |
| J0D–K8115–A0 | 26 – 1 |
| J0D–K8115–T0 | 26 – 1 |
| J0D–K8115–U0 | 26 – 1 |
| J0D–K8115–V0 | 26 – 1 |
| JR1–K8139–00 | 27 – 30 |
| J0B–K8141–00 | 27 – 19 |
| J0B–K8141–30 | 27 – 19 |
| J0B–K8141–70 | 27 – 19 |
| J0B–K8141–80 | 27 – 19 |
| J0B–K8141–90 | 27 – 19 |
| J0B–K8141–A0 | 27 – 19 |
| J0B–K8141–T0 | 27 – 19 |
| J0B–K8141–U0 | 27 – 19 |
| J0B–K8141–V0 | 27 – 19 |
| J0B–K814E–00 | 27 – 3 |
| | 27 – 10 |
| J0B–K814F–00 | 27 – 4 |
| | 27 – 11 |
| J0B–K814R–00 | 27 – 14 |
| J0B–K814T–00 | 27 – 15 |
| J0B–K814U–00 | 27 – 16 |
| J0B–K8164–00 | 25 – 2 |
| J1B–K816M–00 | 12 – 15 |
| J0B–K817H–00 | 27 – 34 |
| J0B–K817H–10 | 27 – 34 |
| J0B–K817J–00 | 27 – 35 |
| J0B–K817J–10 | 27 – 35 |
| J0B–K8187–00 | 28 – 13 |
| J0B–K818A–00 | 28 – 2 |
| J0B–K818B–00 | 28 – 5 |
| J0B–K8191–00 | 28 – 8 |
| J0B–K8192–00 | 28 – 10 |
| J0B–K8197–01 | 28 – 12 |
| J0B–K819H–00 | 27 – 13 |
| JW1–K8214–00 | 38 – 13 |
| J0B–K821A–00 | 12 – 20 |
| J0D–K8233–10 | 26 – 16 |
| J0B–K8237–02 | 27 – 21 |
| J0B–K8243–00 | 26 – 19 |
| J0B–K8244–00 | 26 – 21 |
| J0B–K8245–00 | 31 – 4 |

| PART NO. | REF. NO. |
|---|---|
| J0B–K8246–00 | 31 – 5 |
| J0B–K8247–00 | 31 – 6 |
| J0B–K8248–00 | 31 – 7 |
| J0B–K8251–00 | 27 – 6 |
| J0B–K8252–01 | 12 – 18 |
| J0B–K8253–00 | 15 – 26 |
| J0B–K8254–00 | 11 – 38 |
| J0B–K8255–02 | 27 – 24 |
| J0B–K8256–00 | 12 – 22 |
| J0B–K8257–00 | 12 – 23 |
| J0B–K8258–00 | 12 – 24 |
| J0B–K8259–00 | 12 – 26 |
| J0B–K825A–00 | 12 – 27 |
| J0B–K825E–00 | 12 – 28 |
| J0D–K825G–00 | 27 – 7 |
| J0B–K8271–01 | 28 – 1 |
| J0B–K8273–10 | 26 – 18 |
| J0D–K8282–00 | 26 – 9 |
| JW1–K8297–02 | 27 – 33 |
| JW1–K8297–11 | 27 – 33 |
| JW1–K8297–40 | 27 – 33 |
| J0B–K8312–00 | 38 – 4 |
| JW1–K8313–01 | 38 – 6 |
| JW1–K8314–10 | 38 – 12 |
| JW1–K8314–21 | 38 – 12 |
| J0B–K832F–00 | 26 – 23 |
| J1B–K832F–00 | 26 – 23 |
| J0B–K832G–00 | 26 – 24 |
| J1B–K832G–00 | 26 – 24 |
| JW1–K8340–00 | 29 – 3 |
| JW1–K834G–00 | 29 – 9 |
| JN6–K8355–20 | 29 – 8 |
| JF2–K8356–00 | 29 – 7 |
| J0D–K8357–00 | 14 – 31 |
| J0B–K8358–00 | 14 – 32 |
| J0B–K835E–00 | 26 – 10 |
| J0B–K8361–00 | 31 – 8 |
| J0B–K8362–00 | 31 – 10 |
| JN6–K8380–00 | 29 – 12 |
| J0B–K8388–00 | 38 – 7 |
| JU0–K8388–00 | 38 – 8 |
| | 38 – 14 |
| JW1–K8388–00 | 38 – 5 |
| J0B–K838A–20 | 37 – 8 |
| | 37 – 27 |
| JU0–K8398–00 | 38 – 10 |
| | 38 – 16 |
| J0B–K8401–10 | 31 – 3 |

| PART NO. | REF. NO. |
|---|---|
| J0B–K8402–00 | 39 – 7 |
| J0B–K8402–10 | 39 – 7 |
| JW1–K8402–10 | 31 – 14 |
| J0B–K8423–00 | 29 – 1 |
| J0B–K8426–10 | 31 – 12 |
| J0B–K8427–00 | 31 – 2 |
| J0B–K8432–00 | 39 – 6 |
| J0B–K8460–00 | 39 – 2 |
| J0B–K8466–00 | 39 – 11 |
| J0B–K8473–00 | 39 – 4 |
| J0B–K8474–00 | 39 – 5 |
| J0B–K8477–00 | 39 – 3 |
| J0B–K8480–00 | 39 – 8 |
| J0B–K8480–10 | 39 – 8 |
| J0B–K8483–00 | 39 – 10 |
| J0B–K84A0–00 | 38 – 2 |
| J0B–K84A0–10 | 38 – 2 |
| J0B–K84A2–00 | 38 – 3 |
| JN9–W2536–11 | 18 – 2 |
| | 18 – 13 |
| 90105–06057 | 6 – 19 |
| 90105–06831 | 23 – 18 |
| | 26 – 4 |
| | 35 – 19 |
| 90105–06870 | 35 – 21 |
| 90105–08260 | 21 – 14 |
| 90105–082A0 | 18 – 23 |
| 90105–08867 | 12 – 5 |
| | 12 – 13 |
| | 12 – 19 |
| | 22 – 52 |
| | 35 – 35 |
| 90105–088A9 | 36 – 27 |
| 90105–088B6 | 12 – 16 |
| 90105–10185 | 11 – 41 |
| 90105–10219 | 13 – 8 |
| 90105–10267 | 11 – 44 |
| | 13 – 13 |
| | 13 – 20 |
| 90105–10373 | 13 – 6 |
| 90105–10847 | 14 – 27 |
| 90109–08178 | 29 – 2 |
| | 39 – 1 |
| 90109–08827 | 34 – 8 |
| 90110–06125 | 31 – 13 |
| 90110–06363 | 22 – 47 |
| 90110–06364 | 22 – 48 |
| 90111–05805 | 26 – 11 |

| PART NO. | REF. NO. |
|---|---|
| 90113–04803 | 20 – 11 |
| | 20 – 14 |
| 90113–08803 | 22 – 14 |
| 90114–12006 | 24 – 2 |
| 90114–12805 | 13 – 22 |
| 90119–06808 | 31 – 15 |
| 90119–06868 | 35 – 31 |
| | 35 – 48 |
| 90159–06845 | 29 – 13 |
| 90170–05302 | 4 – 10 |
| 90170–10840 | 22 – 42 |
| 90176–06008 | 29 – 6 |
| 90179–05807 | 35 – 17 |
| 90179–08491 | 34 – 6 |
| 90179–08822 | 16 – 8 |
| 90179–08824 | 35 – 18 |
| 90179–12262 | 13 – 30 |
| | 24 – 4 |
| 90179–20016 | 24 – 3 |
| 90183–05008 | 26 – 12 |
| 90183–08800 | 33 – 11 |
| | 33 – 23 |
| | 33 – 30 |
| | 33 – 37 |
| 90185–06836 | 29 – 11 |
| 90185–10012 | 11 – 42 |
| 90185–12008 | 14 – 7 |
| 90185–12810 | 13 – 18 |
| 90185–12811 | 11 – 18 |
| | 11 – 31 |
| | 14 – 9 |
| 90201–04810 | 14 – 34 |
| 90201–06089 | 22 – 49 |
| 90201–06102 | 36 – 33 |
| 90201–08043 | 34 – 7 |
| 90201–10057 | 2 – 5 |
| | 9 – 15 |
| 90201–10072 | 10 – 3 |
| 90201–121H8 | 18 – 11 |
| | 18 – 22 |
| 90201–121H9 | 18 – 10 |
| | 18 – 21 |
| 90201–128S4 | 36 – 12 |
| 90201–18620 | 34 – 23 |
| 90201–198S7 | 23 – 12 |
| 90201–20035 | 24 – 8 |
| 90201–208H9 | 22 – 19 |
| 90201–208J0 | 22 – 21 |

| PART NO. | REF. NO. |
|---|---|
| 90201–208S8 | 23 – 11 |
| | 36 – 18 |
| 90208–14801 | 13 – 27 |
| 90209–08013 | 21 – 13 |
| 90249–14129 | 16 – 10 |
| 90269–06804 | 26 – 5 |
| | 28 – 4 |
| | 28 – 7 |
| | 28 – 9 |
| | 28 – 11 |
| 90269–07805 | 26 – 20 |
| | 26 – 22 |
| | 27 – 5 |
| | 27 – 12 |
| | 27 – 20 |
| 90269–08001 | 26 – 7 |
| 90269–09003 | 12 – 8 |
| | 26 – 17 |
| | 28 – 3 |
| | 28 – 6 |
| 90269–10001 | 5 – 8 |
| 90280–04052 | 34 – 24 |
| 90340–12097 | 9 – 5 |
| 90381–17800 | 13 – 10 |
| 90381–17803 | 11 – 15 |
| | 11 – 28 |
| 90381–18801 | 13 – 2 |
| 90386–08141 | 19 – 3 |
| 90386–12800 | 17 – 27 |
| 90387–12016 | 13 – 15 |
| 90387–241M7 | 13 – 25 |
| 90450–54008 | 15 – 6 |
| 90461–14108 | 35 – 30 |
| 90462–05061 | 2 – 15 |
| 90464–09823 | 8 – 8 |
| | 35 – 32 |
| 90464–12836 | 35 – 59 |
| 90464–14134 | 15 – 22 |
| 90464–18246 | 15 – 25 |
| 90464–20005 | 35 – 33 |
| 90464–40825 | 15 – 16 |
| | 35 – 38 |
| 90464–48800 | 35 – 34 |
| 90464–51800 | 35 – 39 |
| 90464–76800 | 12 – 31 |
| | 28 – 14 |
| 90465–06038 | 23 – 20 |
| 90467–13847 | 2 – 19 |

| PART NO. | REF. NO. |
|---|---|
| 90467–24140 | 6 – 22 |
| 90468–10049 | 6 – 8 |
| | 17 – 53 |
| 90468–20196 | 16 – 4 |
| 90480–13016 | 33 – 12 |
| | 33 – 24 |
| | 33 – 31 |
| | 33 – 38 |
| 90480–20564 | 34 – 17 |
| 90501–10852 | 22 – 15 |
| 90501–264A9 | 4 – 5 |
| 90506–14001 | 18 – 7 |
| | 18 – 18 |
| 90506–20281 | 18 – 6 |
| | 18 – 17 |
| 90508–16460 | 17 – 54 |
| 90508–40678 | 19 – 4 |
| 90560–05001 | 17 – 55 |
| 90560–08251 | 15 – 8 |
| 91402–20012 | 23 – 8 |
| 91402–25020 | 36 – 26 |
| 91490–25015 | 16 – 13 |
| 91702–05010 | 6 – 7 |
| 91702–05014 | 17 – 52 |
| 91702–06014 | 23 – 6 |
| 91702–08018 | 16 – 12 |
| 91702–10026 | 16 – 3 |
| 92012–06030 | 34 – 10 |
| 92017–06040 | 29 – 4 |
| 92902–04100 | 23 – 15 |
| 92902–04600 | 23 – 16 |
| 92902–05600 | 35 – 24 |
| 92902–06200 | 35 – 6 |
| 92902–06600 | 23 – 7 |
| 92902–08600 | 14 – 30 |
| 92902–10200 | 10 – 6 |
| 92902–12200 | 14 – 8 |
| 9299R–06200 | 29 – 14 |
| 93102–25868 | 22 – 17 |
| 93102–30083 | 13 – 26 |
| 93102–35014 | 9 – 3 |
| | 9 – 10 |
| 93104–11829 | 22 – 37 |
| 93106–38046 | 11 – 13 |
| | 11 – 26 |
| 93109–10820 | 22 – 34 |
| 93210–15414 | 34 – 31 |
| 93210–19001 | 11 – 21 |

| PART NO. | REF. NO. |
|---|---|
| 93210–19001 | 11 – 34 |
| 93210–22344 | 9 – 17 |
| 93306–005Y3 | 13 – 24 |
| 93306–006X0 | 11 – 11 |
| | 11 – 24 |
| 93306–006Y4 | 11 – 12 |
| | 11 – 25 |
| 93306–007Y0 | 22 – 39 |
| 93306–20201 | 9 – 4 |
| | 9 – 11 |
| 93306–204X0 | 13 – 23 |
| 93306–20714 | 9 – 9 |
| 93306–303Y6 | 22 – 4 |
| 93306–30709 | 9 – 2 |
| 93450–21053 | 3 – 5 |
| 93450–22119 | 24 – 11 |
| 93500–06826 | 22 – 16 |
| 93606–10842 | 22 – 22 |
| 94702–00343 | 2 – 8 |
| 94702–00348 | 2 – 8 |
| 95302–06600 | 19 – 2 |
| | 34 – 11 |
| 95302–06800 | 15 – 12 |
| 95302–08700 | 25 – 5 |
| 95302–10600 | 36 – 23 |
| 95302–18600 | 34 – 22 |
| 95307–08700 | 16 – 9 |
| 95602–06200 | 19 – 6 |
| | 36 – 34 |
| 95602–08100 | 23 – 1 |
| | 36 – 30 |
| 95602–08200 | 36 – 29 |
| 95602–08710 | 2 – 17 |
| 95602–10200 | 10 – 7 |
| | 10 – 9 |
| | 11 – 36 |
| | 11 – 45 |
| | 13 – 7 |
| | 25 – 8 |
| | 36 – 25 |
| 95602–12200 | 36 – 13 |
| | 36 – 20 |
| 95602–14100 | 13 – 28 |
| 95604–06200 | 22 – 46 |
| 95607–06200 | 17 – 6 |
| 95622–08618 | 2 – 7 |
| 95702–06500 | 35 – 7 |
| | 35 – 43 |

| PART NO. | REF. NO. |
|---|---|
| 95702–08500 | 6 – 2 |
| | 8 – 6 |
| | 11 – 20 |
| | 11 – 33 |
| | 34 – 9 |
| 95802–06016 | 6 – 6 |
| 95802–06020 | 5 – 2 |
| | 5 – 6 |
| 95802–10035 | 36 – 9 |
| 95802–10050 | 36 – 4 |
| 95812–06025 | 7 – 10 |
| | 36 – 32 |
| 95812–08016 | 25 – 3 |
| 95812–08020 | 14 – 2 |
| | 17 – 50 |
| 95812–08040 | 12 – 3 |
| | 34 – 5 |
| 95812–08045 | 9 – 13 |
| 95812–08050 | 25 – 4 |
| 95812–08060 | 11 – 19 |
| | 11 – 32 |
| 95812–10020 | 10 – 2 |
| | 22 – 1 |
| 95812–10055 | 11 – 35 |
| 95812–12030 | 34 – 3 |
| 95812–12055 | 11 – 17 |
| | 11 – 30 |
| 95812–12080 | 13 – 17 |
| 95822–06012 | 25 – 6 |
| | 34 – 28 |
| | 35 – 3 |
| 95822–06016 | 34 – 18 |
| | 34 – 21 |
| | 35 – 42 |
| 95822–06030 | 2 – 14 |
| 95822–08020 | 8 – 5 |
| | 34 – 13 |
| 95822–10020 | 11 – 2 |
| 97012–06020 | 17 – 7 |
| 97012–08030 | 14 – 29 |
| 97012–10050 | 9 – 14 |
| 97012–10070 | 2 – 4 |
| 9708R–06020 | 29 – 10 |
| 97702–50016 | 6 – 20 |
| 97702–60416 | 6 – 17 |
| 98502–04016 | 23 – 14 |
| 98502–05025 | 35 – 23 |
| 98502–06014 | 7 – 4 |

| PART NO. | REF. NO. |
|---|---|
| 99001–07600 | 6 – 9 |
| 99001–09600 | 16 – 11 |
| 99009–19400 | 23 – 13 |
| 99530–08016 | 9 – 7 |
| 99530–14016 | 2 – 6 |