YAMAHA

PARTS CATALOGUE

DR2A20 PTV (J0D4) CANADA, EUROPE, OTHERS

YAMAHA GENUINE Parts & Accessories

NEWS No.	DATE	COMMENT
PE0-GC-200009	May.,15,2020	COR:HEAD & TAIL LIGHT ILLUSTRATION CORRECTION

1VJ0D-100E1

( )

2020/06/05

DR2A20 PTV
PARTS CATALOGUE
©2020 by Yamaha Motor Co., Ltd.
1st edition, June 2020
All rights reserved.
Any reprinting or unauthorized use
without the written permission of
Yamaha Motor Co., Ltd.
is expressly prohibited.
Printed in Japan.

FOREWORD

This Parts Catalogue is related to the parts for the model(s) on the cover page. When you are ordering replacement parts, please refer to this Parts Catalogue and quote both part numbers and part names correctly.

1. Modifications or additions which have been made after the issue of the Parts Catalogue will be announced in the Parts News.
   It is advisable that you make the necessary corrections to the Parts Catalogue according to the Parts News.

2. Abbreviations
   The following abbreviations are used in this Parts Catalogue.

   "UR" Use specified parts number.

   "UN" Use as many as needed.

   "AP" Alternate Parts

   "LM" Locally Made (Parts need to be ordered locally)

   "F#" Frame No. (Applicable machine No.)

   "O/S" Over Size

3. The number of components for assembly
   - Parts, which are to be supplied in an assembly, are listed with a dot (.) in front of the part name as shown below.
   - The numeral appearing to the right of each component part indicates the quantity of parts for each assembly unit.

PART NO.	DESCRIPTION	Q'TY	REMARKS
2F5–83310–60	FRONT FLASHER LIGHT ASSY	2	
115–83311–60	.BULB (6V–18W)	1	

4. Applicable colours of graphics are represented in the "REMARKS" as shown below.

PART NO.	DESCRIPTION	Q'TY	REMARKS
2N4–24110–00–X5	FUEL TANK COMP.	2	MXR
3J1–24240–10	.GRAPHIC, FUEL TANK	1	FOR MXR

5. Note that the illustrations for reference in finding parts numbers are not to be used for assembling. When assembling, please use the applicable service manual.

6. The asterisk (*) before a reference number indicates modified items after the first edition.

7. Applicable Serial No.

Engine Serial No.

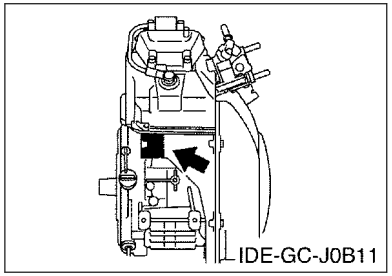

Frame Serial No.

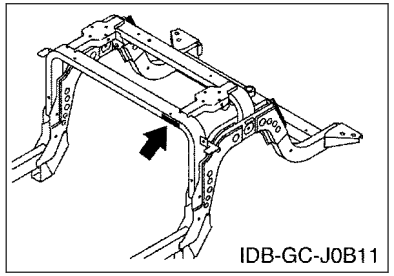

8. Applicable Colour Code (The (*) mark shows Model colour.)

Abbreviation	Colour Name	Colour Code
BMG(*)	BLACK METALLIC G	1050
BW1(*)	BLUISH WHITE 1	1571
DNBME(*)	DARK GRAYISH BLUE METALLIC E	0866
DRMV(*)	DEEP RED METALLIC V	1365
LNMP(*)	LIGHT GRAY METALLIC P	0925
MDNM7(*)	MAT DARK GRAY METALLIC 7	1606
MDOM1(*)	MAT DEEP ORANGE METALLIC 1	1778
MNYM2(*)	MAT GRAYISH YELLOW METALLIC 2	1749
VPBM6(*)	VIVID PURPLISH BLUE METALLIC 6	1002

9. Quantity Column Information

Column No.	Name Of Q'ty Column	Destination
1	J0D4	CANADA, EUROPE, OTHERS

10. Applicable Starting Serial No.

Frame Serial No.

Serial No.	Name Of Q'ty Column	Model Code
J0D-300101	J0D4	J0D4

CONTENTS

ENGINE 1 1

ENGINE

CYLINDER HEAD 2
CRANKSHAFT & PISTON 3
CAMSHAFT & VALVE 4
AIR SHROUD & FAN 5
INTAKE 1 6
INTAKE 2 7
EXHAUST 8
CRANKCASE 9

BODY

ENGINE BRACKET 10
REAR ARM & SUSPENSION 11
FRAME 13
FRONT SUSPENSION & WHEEL 15
STEERING 17
FUEL TANK 19
PEDAL WIRE 20
PEDAL ASSEMBLY 21
BRAKE 24
GOVERNOR 25

DRIVE

PRIMARY SHEAVE 26
SECONDARY SHEAVE 27
TRANSMISSION 28
SHIFTER & CABLES 30
REAR AXLE & WHEEL 31
BUMPER 32
BODY 33
BODY 2 35
BODY FITTING 38
CARRIER 39
REAR VIEW MIRROR 40
SEAT 41

ELECTRICAL

STARTING MOTOR 42
HEAD & TAIL LIGHT 44
ELECTRICAL 1 46
ELECTRICAL 2 48
ALTERNATE FOR CHASSIS 51
ALTERNATE FOR WINDSHIELD 53
ALTERNATE FOR SUN ROOF 55
ALTERNATE FOR SEAT 56

INDEX

NUMERICAL INDEX 57

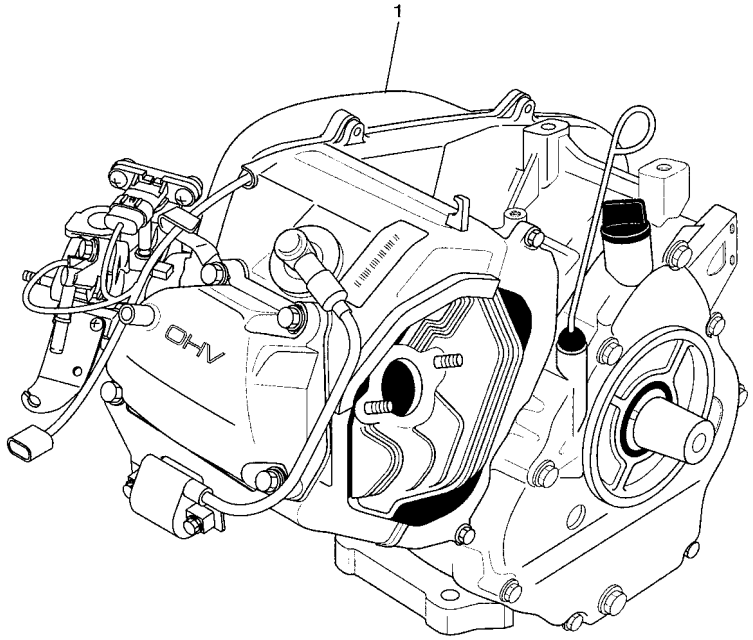

JC04110-L010

FIG. 1 ENGINE 1

REF. NO.	PART NO.	DESCRIPTION	J0D4					REMARKS
1	J0B–19001–40	ENGINE ASSEMBLY	1					

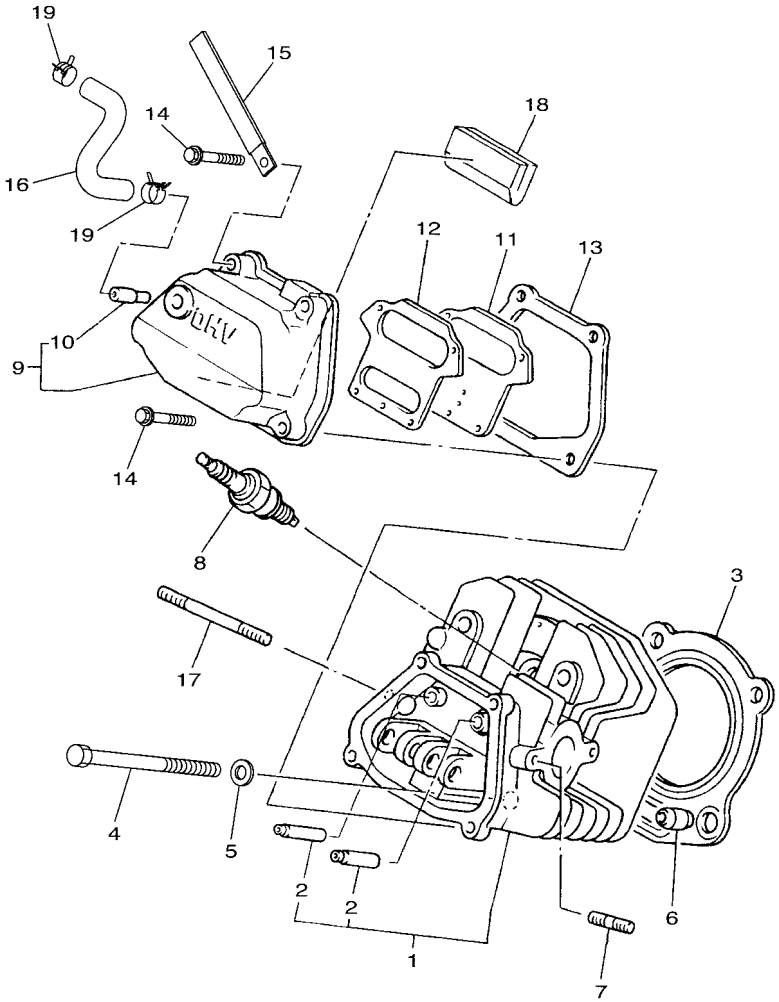

J0B1110-S010

FIG. 2 CYLINDER HEAD

REF. NO.	PART NO.	DESCRIPTION	J0D4					REMARKS
1	JT0–11111–00	HEAD, CYLINDER 1	1					
2	JN6–11133–10	.GUIDE, VALVE 1	2					
3	JT0–11181–00	GASKET, CYLINDER HEAD 1	1					
4	97012–10070	BOLT	4					
5	90201–10057	WASHER, PLATE	4					
6	99530–14016	PIN, DOWEL	2					
7	95622–08618	BOLT, STUD	2					
8	94702–00348	PLUG, SPARK (NGK-BPR2ES)	1					STD
	94702–00343	PLUG, SPARK (NGK BR4ES)	1					AP
9	JN6–11191–01	COVER, CYLINDER HEAD 1	1					
10	JN6–11116–00	.JOINT, BREATHER	1					
11	JN6–11168–00	COVER, BREATHER	1					
12	JN6–11169–00	GASKET, BREATHER COVER	1					
13	JN6–11193–00	GASKET, HEAD COVER 1	1					
14	95822–06030	BOLT, FLANGE	4					
15	90462–05061	CLAMP	1					
16	J0B–E1166–00	PIPE, BREATHER 1	1					
17	95602–08710	BOLT, STUD	2					
18	JR7–11163–10	ELEMENT	1					
19	90467–13847	CLIP	2					

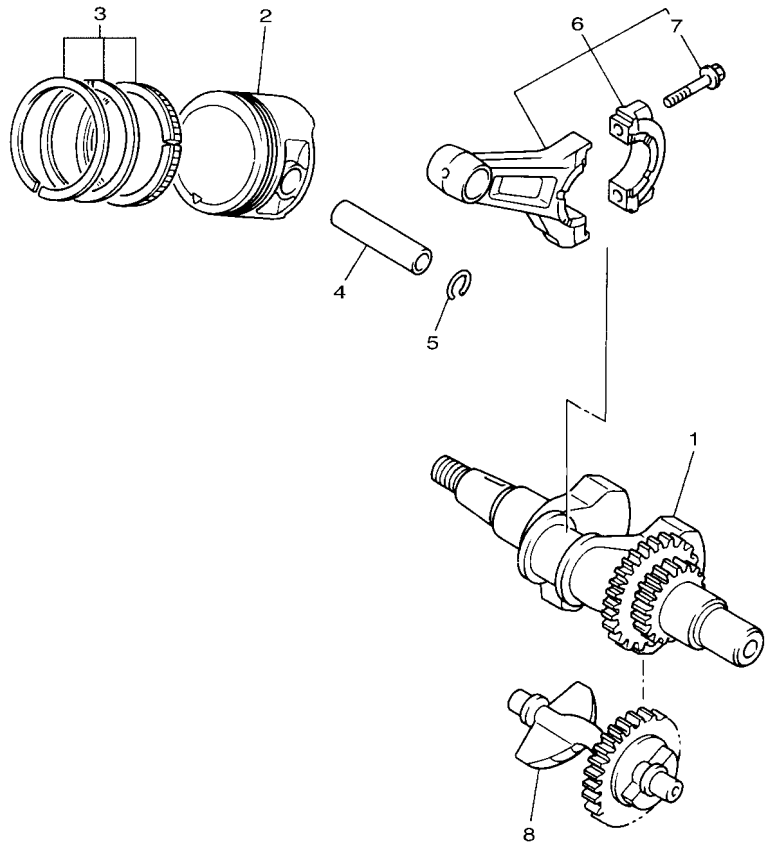

JN7010-6021

FIG. 3 CRANKSHAFT & PISTON

REF. NO.	PART NO.	DESCRIPTION	J0D4					REMARKS
1	JN6–11400–00	CRANKSHAFT ASSY	1					
2	JR7–11631–00–A0	PISTON (STD)	1					
	JR7–11635–00	PISTON (0.25MM O/S)	1					AP
	JR7–11636–00	PISTON (0.50MM O/S)	1					AP
3	JR7–11610–00	PISTON RING SET (STD)	1					
	JR7–11610–10	PISTON RING SET (0.25MM O/S)	1					AP
	JR7–11610–20	PISTON RING SET (0.50MM O/S)	1					AP
4	583–11633–00	PIN, PISTON	1					
5	93450–21053	CIRCLIP	2					
6	JN6–11650–10	CONNECTING ROD ASSY	1					
7	JN6–11654–10	.BOLT, CONNECTING ROD	2					
8	JN6–11454–10	WEIGHT 1	1					

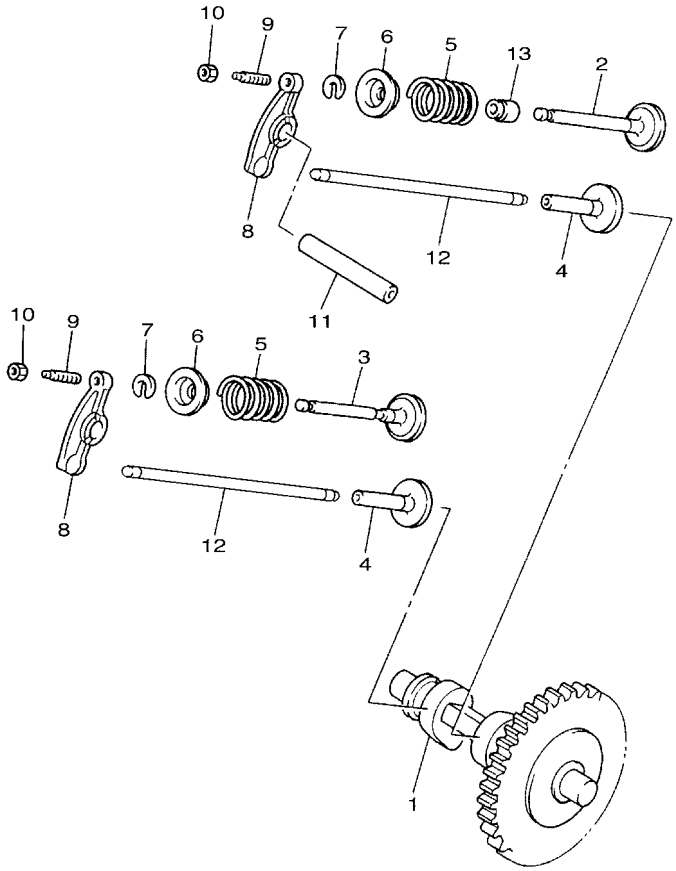

FWD

JD13110-K030

FIG. 4 CAMSHAFT & VALVE

REF. NO.	PART NO.	DESCRIPTION	J0D4					REMARKS
1	JR7–12180–10	CAMSHAFT ASSY 2	1					
2	JN6–12111–10	VALVE, INTAKE	1					
3	7RH–12121–10	VALVE, EXHAUST	1					
4	JN6–12153–10	LIFTER, VALVE	2					
5	90501–264A9	SPRING, COMPRESSION	2					
6	J38–12117–01	RETAINER, VALVE SPRING	2					
7	J38–12118–00	LOCK, VALVE SPRING RETAINER	2					
8	JN6–12151–10	ARM, VALVE ROCKER	2					
9	22F–12159–10	SCREW, VALVE ADJUSTING	2					
10	90170–05302	NUT	2					
11	J38–12156–20	SHAFT, ROCKER 2	1					
12	JR7–12154–10	ROD, VALVE PUSH	2					
13	4G0–12119–00	SEAL, VALVE STEM	1					

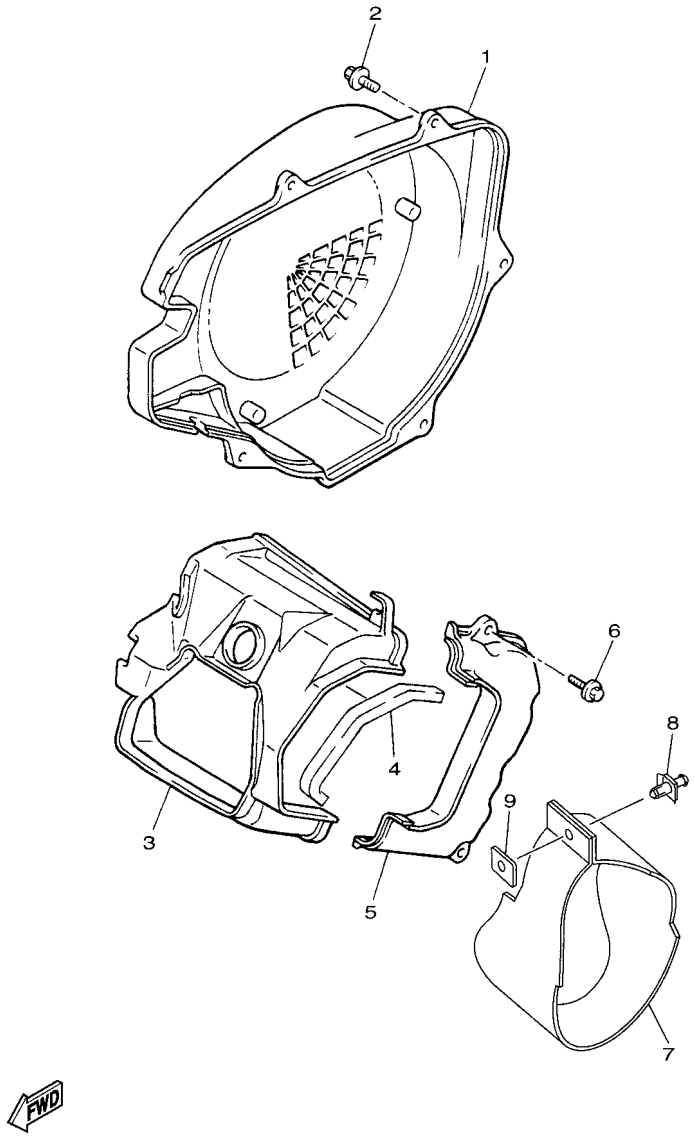

J0B1110-S040

FIG. 5 AIR SHROUD & FAN

REF. NO.	PART NO.	DESCRIPTION	J0D4					REMARKS
1	JN6–12621–02	CASE, FAN	1					
2	95802–06020	BOLT, FLANGE	4					
3	JN6–12651–01	AIR SHROUD, CYLINDER 1	1					
4	JR7–12658–00	DAMPER, AIR SHROUD 1	1					
5	JN6–12652–00	AIR SHROUD, CYLINDER 2	1					
6	95802–06020	BOLT, FLANGE	2					
7	J0B–E2691–00	DUCT 1	1					
8	90269–10001	RIVET	1					
9	JR7–12634–00	PLATE 2	1					

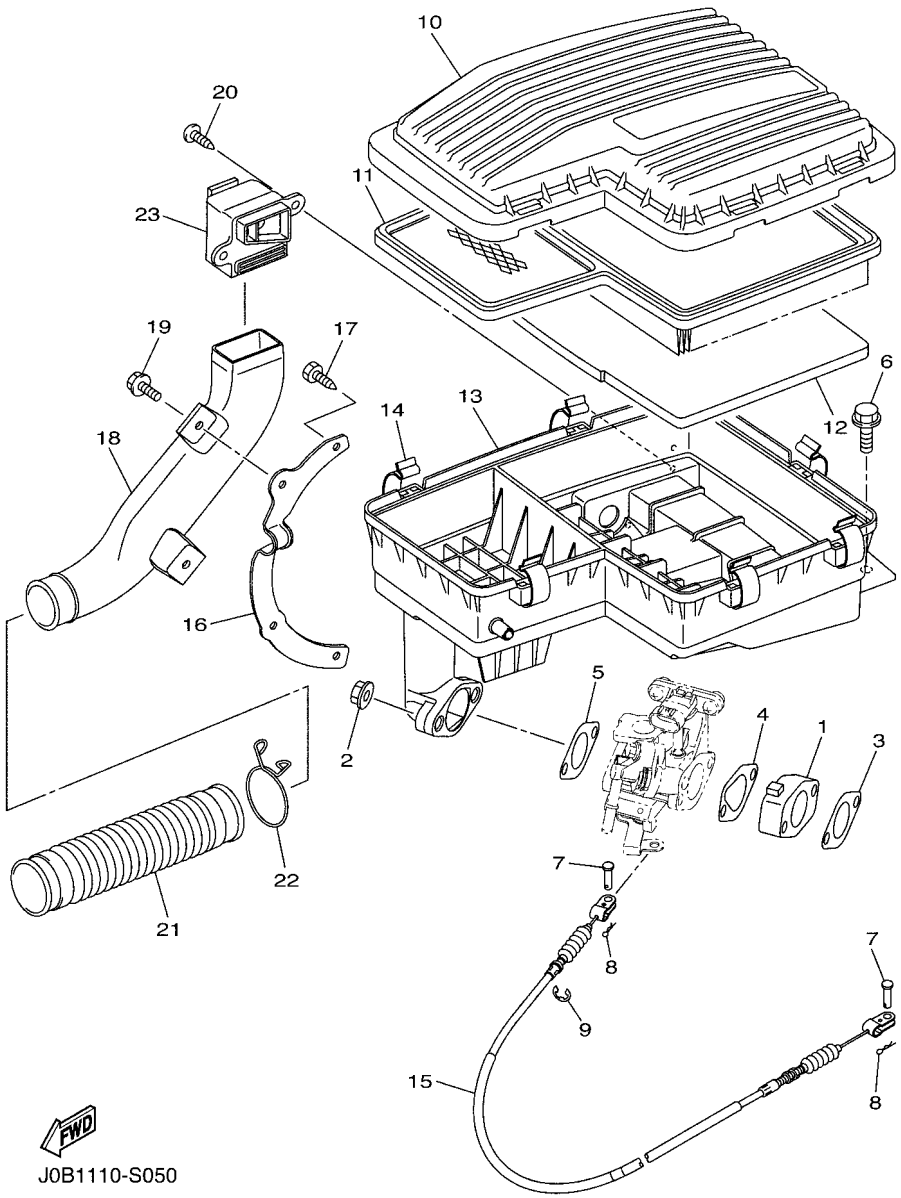

J0B1110-S050

FIG. 6 INTAKE 1

REF. NO.	PART NO.	DESCRIPTION	J0D4					REMARKS
1	JC0–13595–00	JOINT	1					
2	95702–08500	NUT, FLANGE	2					
3	JN6–13567–00	GASKET	1					
4	JC0–13567–00	GASKET	1					
5	JN6–13567–00	GASKET	1					
6	95802–06016	BOLT, FLANGE	2					
7	91702–05010	PIN, CLEVIS	2					
8	90468–10049	CLIP	2					
9	99001–07600	CIRCLIP	1					
10	J0B–E4412–00	CAP, CLEANER CASE 1	1					
11	J0B–E4451–01	ELEMENT, AIR CLEANER	1					
12	JU0–E445E–00	FILTER 1	1					
13	J0B–E4411–01	CASE, AIR CLEANER 1	1					
14	3B4–14424–00	CLIP, CAP FITTING	7					
15	J0B–F6312–00	CABLE, THROTTLE 2	1					
16	J0B–E4413–00	STAY	1					
17	97702–60416	SCREW, TAPPING	2					
18	J0B–E5471–00	DUCT, AIR	1					
19	90105–06057	BOLT, FLANGE	2					
20	97702–50016	SCREW, TAPPING	2					
21	J0B–E4437–00	DUCT	1					
22	90467–24140	CLIP	1					
23	J0B–E4453–01	JOINT, AIR CLEANER 1	1					

FIG. 7 INTAKE 2

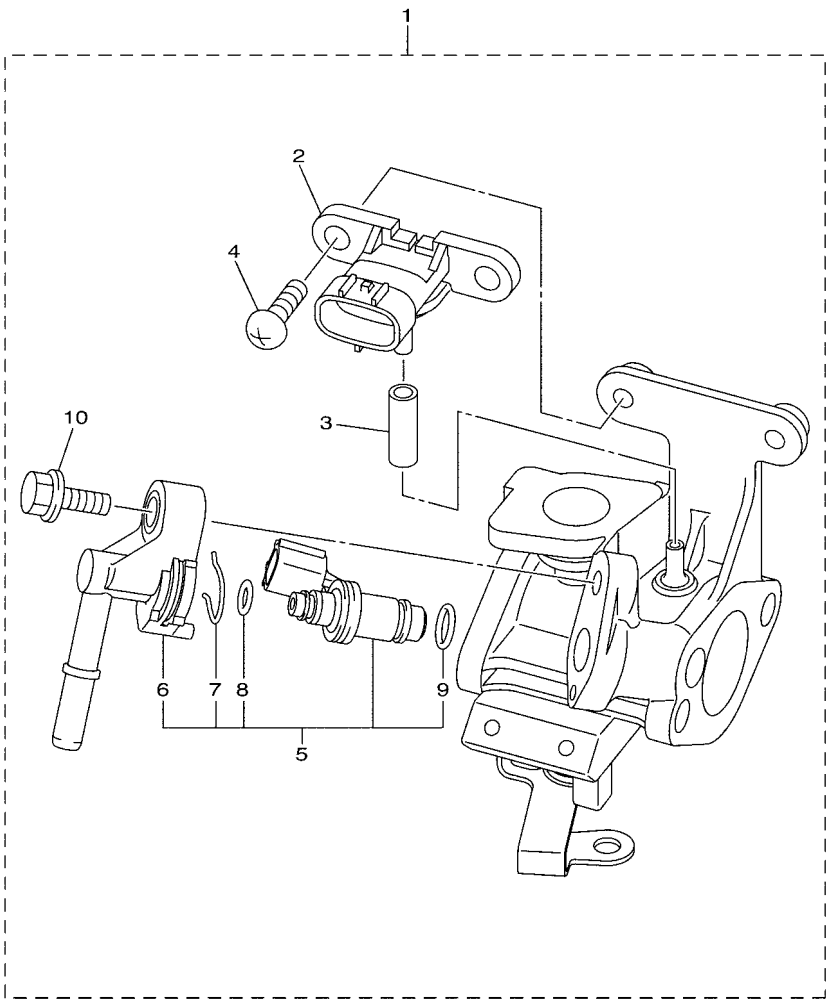

J0B1110-S061

REF. NO.	PART NO.	DESCRIPTION	J0D4					REMARKS
1	J0B–13750–01	THROTTLE BODY ASSY	1					
2	1C7–82380–00	.SENSOR, PRESSURE	1					
3	JC0–13542–01	.HOSE, VACUUM SENSING 1	1					
4	98502–06014	.SCREW, PAN HEAD	2					
5	J0B–13770–00	.INJECTOR ASSY	1					
6	52S–13938–00	..PIPE	1					
7	52B–14137–00	..CLIP	1					
8	52B–14147–00	..O-RING	1					
9	5CA–14147–00	..O-RING	1					
10	95812–06025	.BOLT, FLANGE	1					

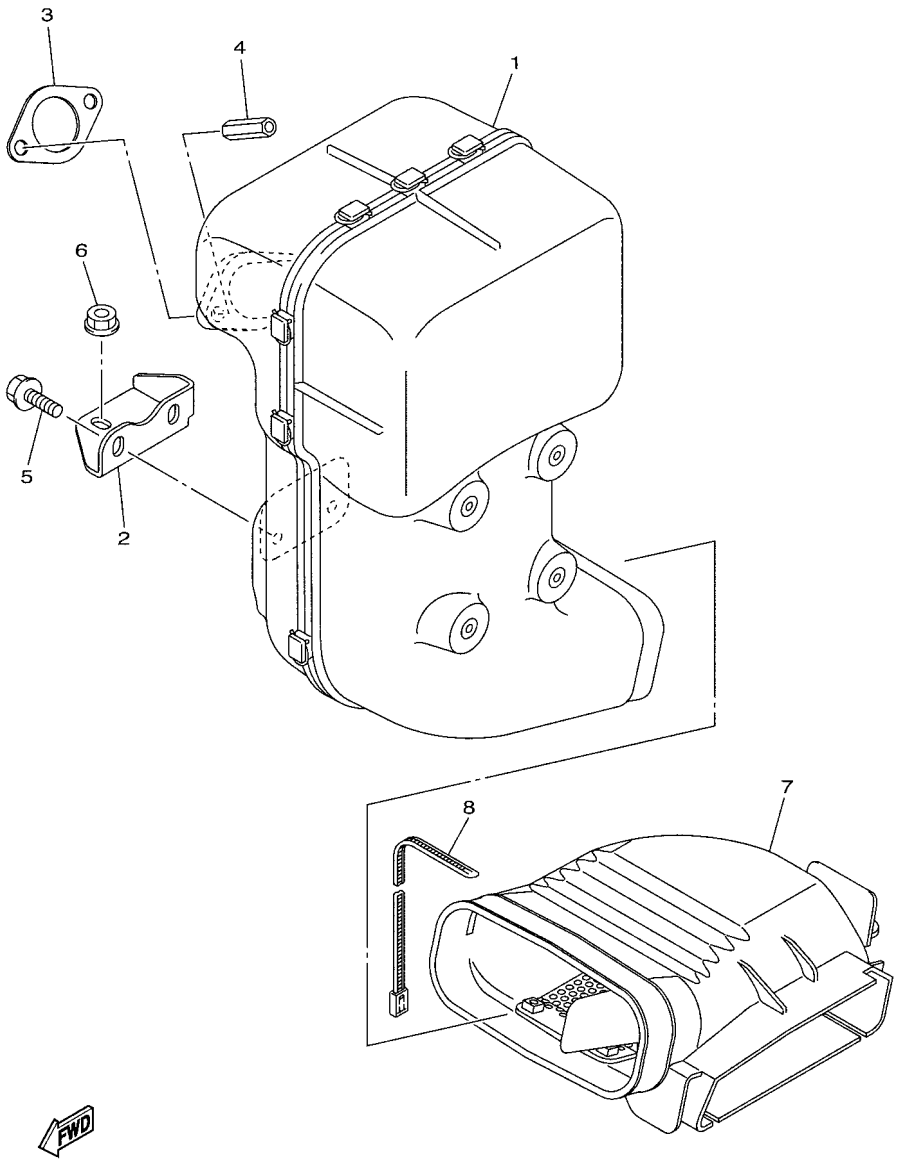

J0B4110-V080

FIG. 8 EXHAUST

REF. NO.	PART NO.	DESCRIPTION	J0D4					REMARKS
1	J0B–E4710–03	MUFFLER ASSY 1	1					
2	J0B–F1436–00	BRKT., MUFF. 2	1					
3	7KY–14613–01	GASKET, EXHAUST 1	1					
4	JW1–E4713–00	NUT, MUFFLER JOINT	2					
5	95822–08020	BOLT, FLANGE	2					
6	95702–08500	NUT, FLANGE	1					
7	J0B–E4430–10	DUCT ASSY	1					
8	90464–09823	CLAMP	1					

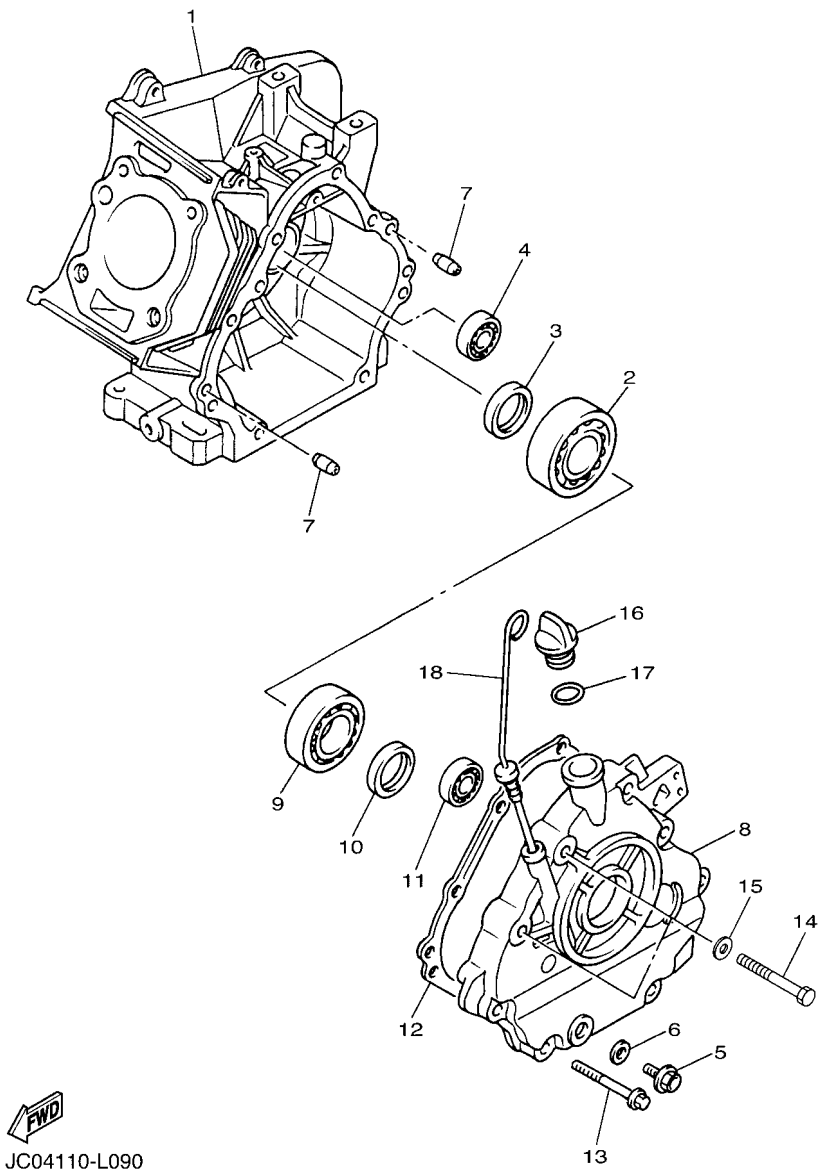

FIG. 9 CRANKCASE

REF. NO.	PART NO.	DESCRIPTION	J0D4					REMARKS
1	JC0–15111–01	CRANKCASE 1	1					
2	93306–30709	BEARING	1					
3	93102–35014	OIL SEAL	1					
4	93306–20201	BEARING	1					
5	90340–12097	PLUG, STRAIGHT SCREW	1					
6	812–11198–00	GASKET	1					
7	99530–08016	PIN, DOWEL	2					
8	JN6–15411–01	COVER, CRANKCASE 1	1					
9	93306–20714	BEARING	1					
10	93102–35014	OIL SEAL	1					
11	93306–20201	BEARING	1					
12	JY2–15451–00	GASKET, CRANKCASE COVER 1	1					
13	95812–08045	BOLT, FLANGE	6					
14	97012–10050	BOLT	2					
15	90201–10057	WASHER, PLATE	2					
16	796–15363–01	PLUG, OIL	1					
17	93210–22344	O-RING	1					
18	J38–15361–00	GAUGE, LEVEL	1					

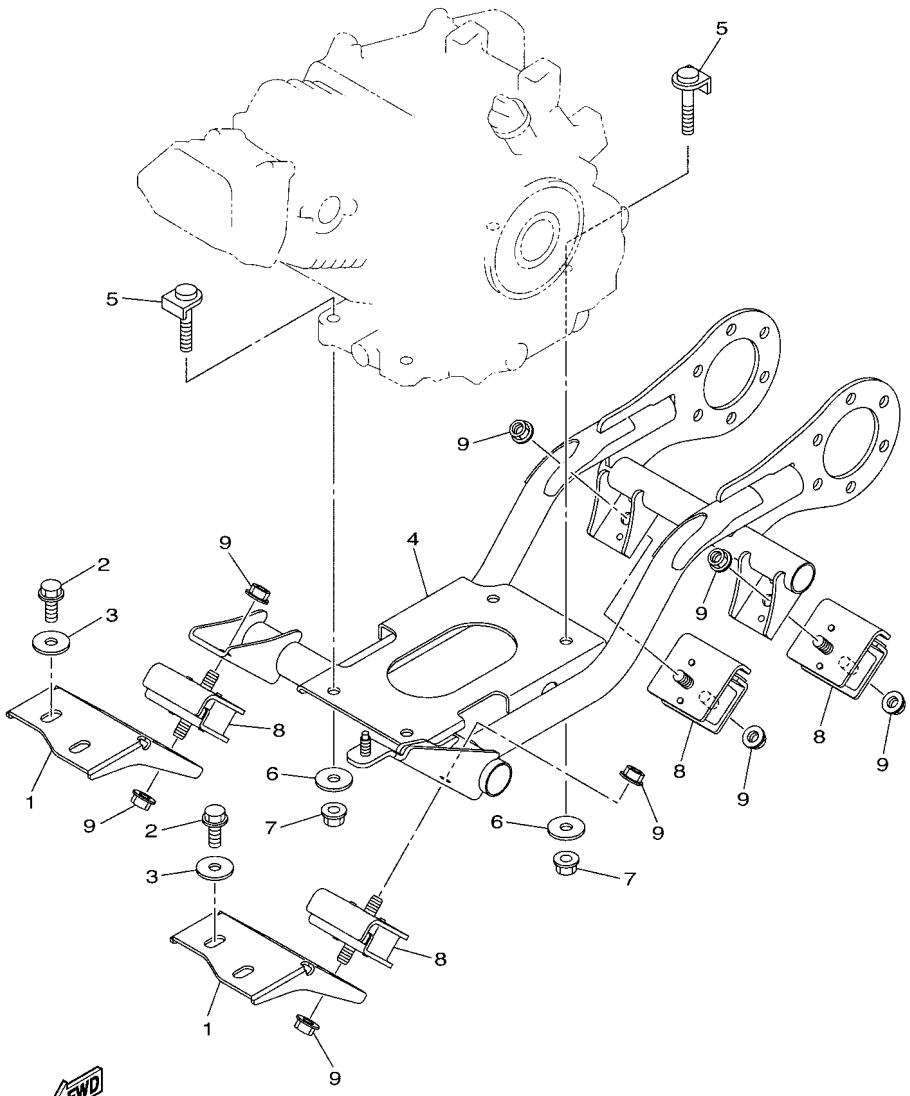

J0B1110-S090

FIG. 10 ENGINE BRACKET

REF. NO.	PART NO.	DESCRIPTION	J0D4					REMARKS
1	J0B–F1411–00	BRACKET, ENGINE 1	2					
2	95812–10020	BOLT, FLANGE	4					
3	90201–10072	WASHER, PLATE	4					
4	J0B–F1419–01	BRACKET, ENGINE 2	1					
5	JT0–21481–00	BOLT, ENGINE MOUNTING 1	4					
6	92902–10200	WASHER	4					
7	95602–10200	NUT, S/L FLANGE	4					
8	J0B–F1485–00	DAMPER, RUBBER 1	4					
9	95602–10200	NUT, S/L FLANGE	8					

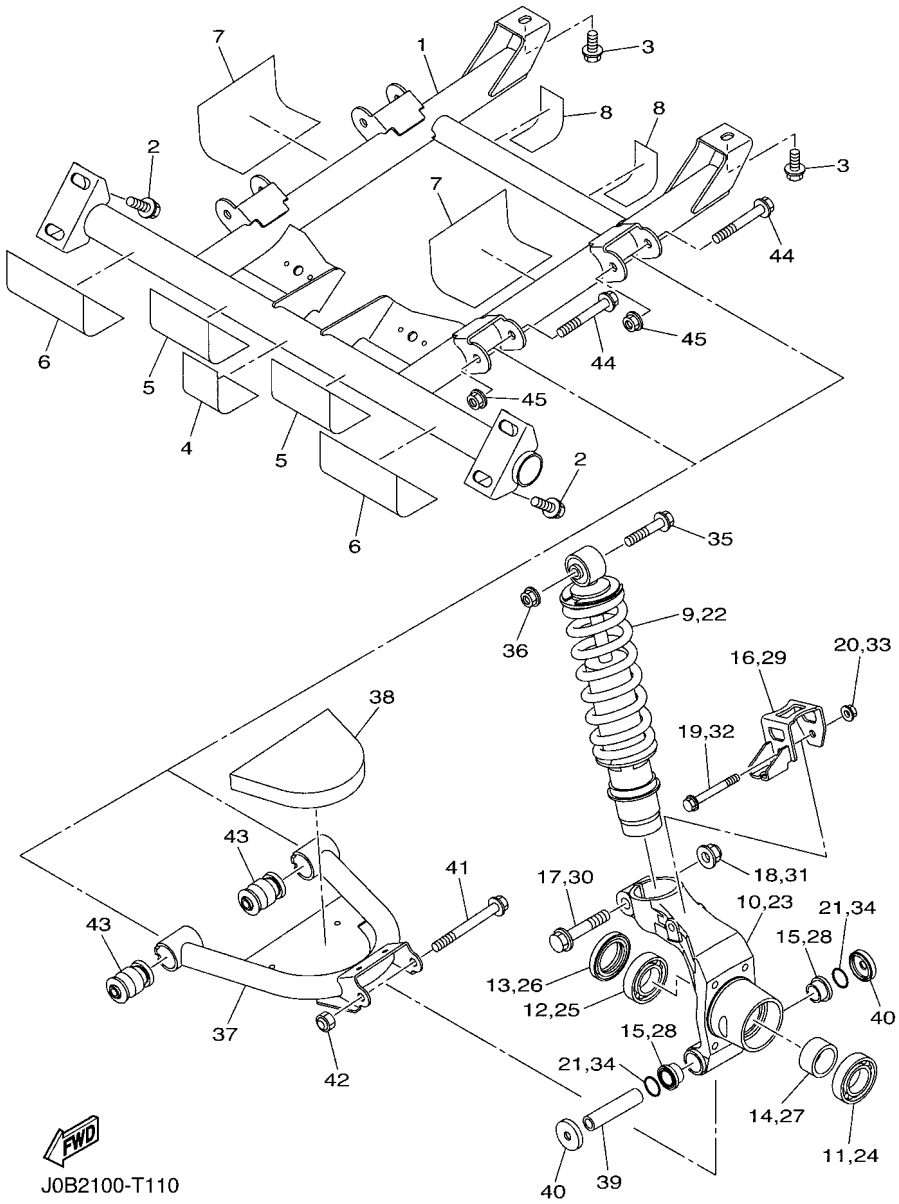

FIG. 11 REAR ARM & SUSPENSION

REF. NO.	PART NO.	DESCRIPTION	J0D4					REMARKS
1	J0B–F2110–02	REAR ARM COMP.	1					
2	95822–10020	BOLT, FLANGE	4					
3	J0B–F1531–00	BOLT	2					
4	J0B–F8218–00	SEAL 1	1					
5	J0B–F8228–00	SEAL 2	2					
6	J0B–F8238–00	SEAL 3	2					
7	J0B–F8268–00	SEAL 4	2					
8	J0B–F8278–00	SEAL 5	2					
9	J0B–F2210–00	SHOCK ABSORBER ASSY, REAR	1					
10	J0B–F53A1–01	KNUCKLE, REAR	1					
11	93306–006X0	BEARING	1					
12	93306–006Y4	BEARING	1					
13	93106–38046	OIL SEAL	1					
14	J0B–F3113–00	COLLAR	1					
15	90381–17803	BUSH, SOLID	2					
16	J0B–F537W–00	BRACKET 1	1					
17	95812–12055	BOLT, FLANGE	1					
18	90185–12811	NUT, SELF-LOCKING	1					
19	95812–08060	BOLT, FLANGE	1					
20	95702–08500	NUT, FLANGE	1					
21	93210–19001	O-RING	2					
22	J0B–F2210–00	SHOCK ABSORBER ASSY, REAR	1					
23	J0B–F53A1–01	KNUCKLE, REAR	1					
24	93306–006X0	BEARING	1					
25	93306–006Y4	BEARING	1					
26	93106–38046	OIL SEAL	1					
27	J0B–F3113–00	COLLAR	1					

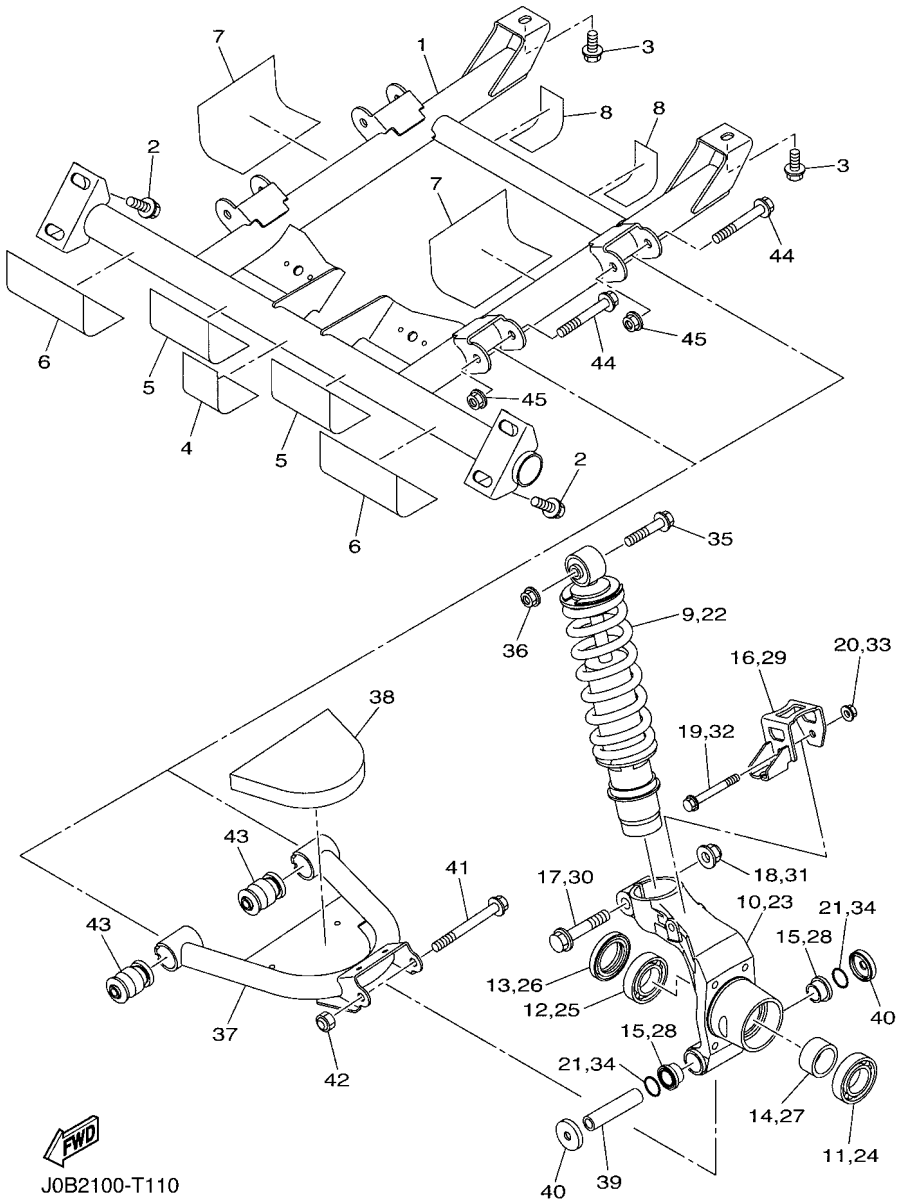

FIG. 11 REAR ARM & SUSPENSION

REF. NO.	PART NO.	DESCRIPTION	J0D4					REMARKS
28	90381–17803	BUSH, SOLID	2					
29	J0B–F537W–00	BRACKET 1	1					
30	95812–12055	BOLT, FLANGE	1					
31	90185–12811	NUT, SELF-LOCKING	1					
32	95812–08060	BOLT, FLANGE	1					
33	95702–08500	NUT, FLANGE	1					
34	93210–19001	O-RING	2					
35	95812–10055	BOLT, FLANGE	2					
36	95602–10200	NUT, S/L FLANGE	2					
37	J0B–F2171–01	ARM, REAR 1	2					
38	J0B–K8254–00	PAD, SILENCER 4	2					
39	5KM–23448–00	SPACER	2					
40	5UG–23517–10	COVER, THRUST 1	4					
41	90105–10185	BOLT, FLANGE	2					
42	90185–10012	NUT, SELF-LOCKING	2					
43	2HR–23526–00	BUSH	4					
44	90105–10267	BOLT, FLANGE	4					
45	95602–10200	NUT, S/L FLANGE	4					

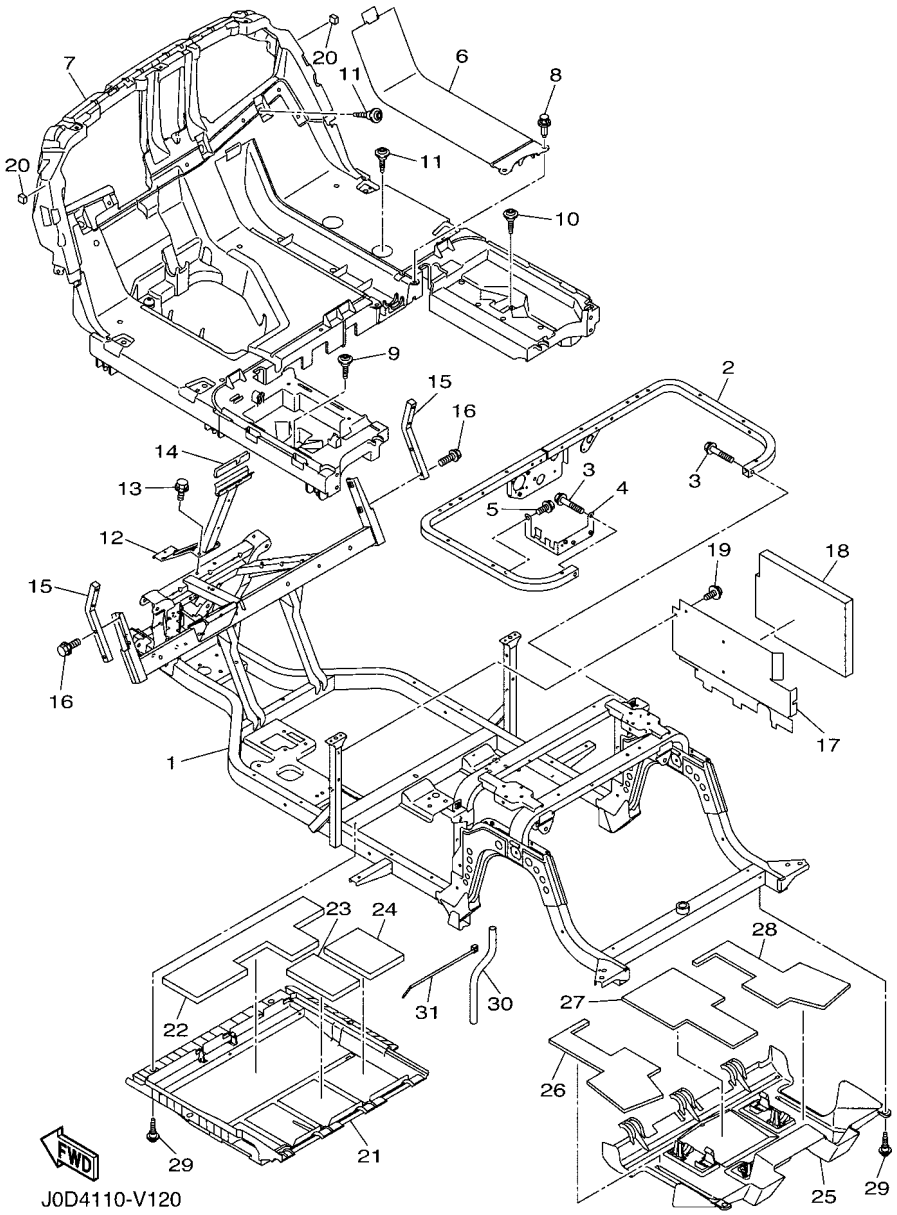

FIG. 12 FRAME

REF. NO.	PART NO.	DESCRIPTION	J0D4					REMARKS
1	J0B–F2501–20	FRAME COMP.	1					
2	J0B–F255G–00	MEMBER, SEAT SUPPORT	1					
3	95812–08040	BOLT, FLANGE	2					
4	J0B–F253B–01	STAY, RELAY	1					
5	90105–08867	BOLT, FLANGE	1					
6	J0B–F7413–01	COVER, FOOTREST	1					
7	J0D–F7411–01	FOOTREST 1	1					
8	90269–09003	RIVET	2					
9	J0B–F1738–00	BOLT	1					
10	J0B–F1738–00	BOLT	1					
11	J0B–F1738–00	BOLT	7					
12	J0B–F258E–10	SUPPORT, FRONT COWL	1					
13	90105–08867	BOLT, FLANGE	2					
14	J0B–F2127–00	SHIM	1					
15	J1B–K816M–00	SUPPORT, HOLDER	2					
16	90105–088B6	BOLT, FLANGE	4					
17	J0B–F258R–01	PLATE, BATTERY 3	1					
18	J0B–K8252–01	PAD, SILENCER 2	1					
19	90105–08867	BOLT, FLANGE	2					
20	J0B–K821A–00	PAD, BODY MOUNTING1	2					
21	J0B–F3123–10	COVER, UNDER 1	1					
22	J0B–K8256–00	PAD, SILENCER 6	1					
23	J0B–K8257–00	PAD, SILENCER 7	1					
24	J0B–K8258–00	PAD, SILENCER 8	1					
25	J0B–F3133–10	COVER, UNDER 2	1					
26	J0B–K8259–00	PAD, SILENCER 9	1					
27	J0B–K825A–00	PAD, SILENCER 10	1					

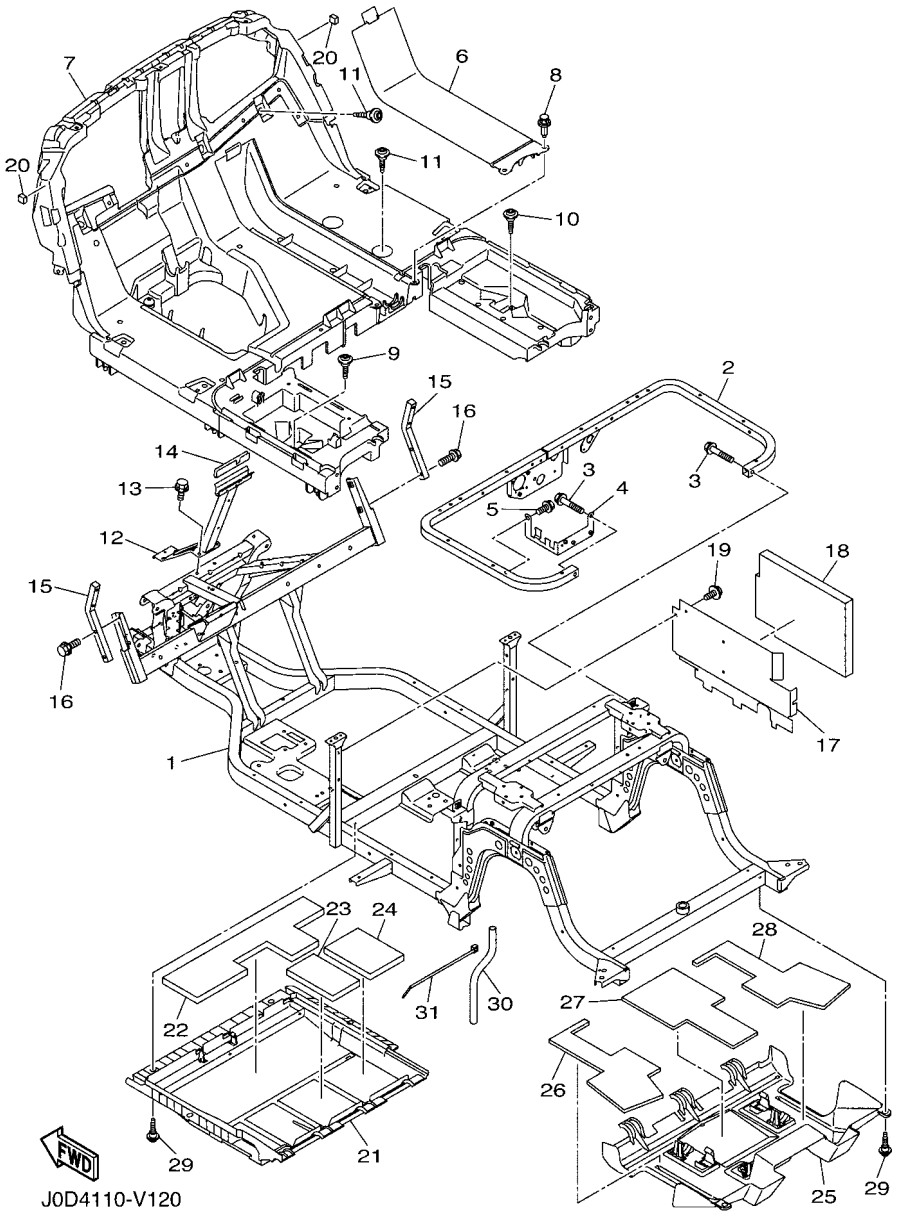

FIG. 12 FRAME

REF. NO.	PART NO.	DESCRIPTION	J0D4					REMARKS
28	J0B–K825E–00	PAD, SILENCER 11	1					
29	J0B–F1738–00	BOLT	6					
30	J0B–F125J–00	PIPE, DRAIN	2					
31	90464–76800	CLAMP	2					

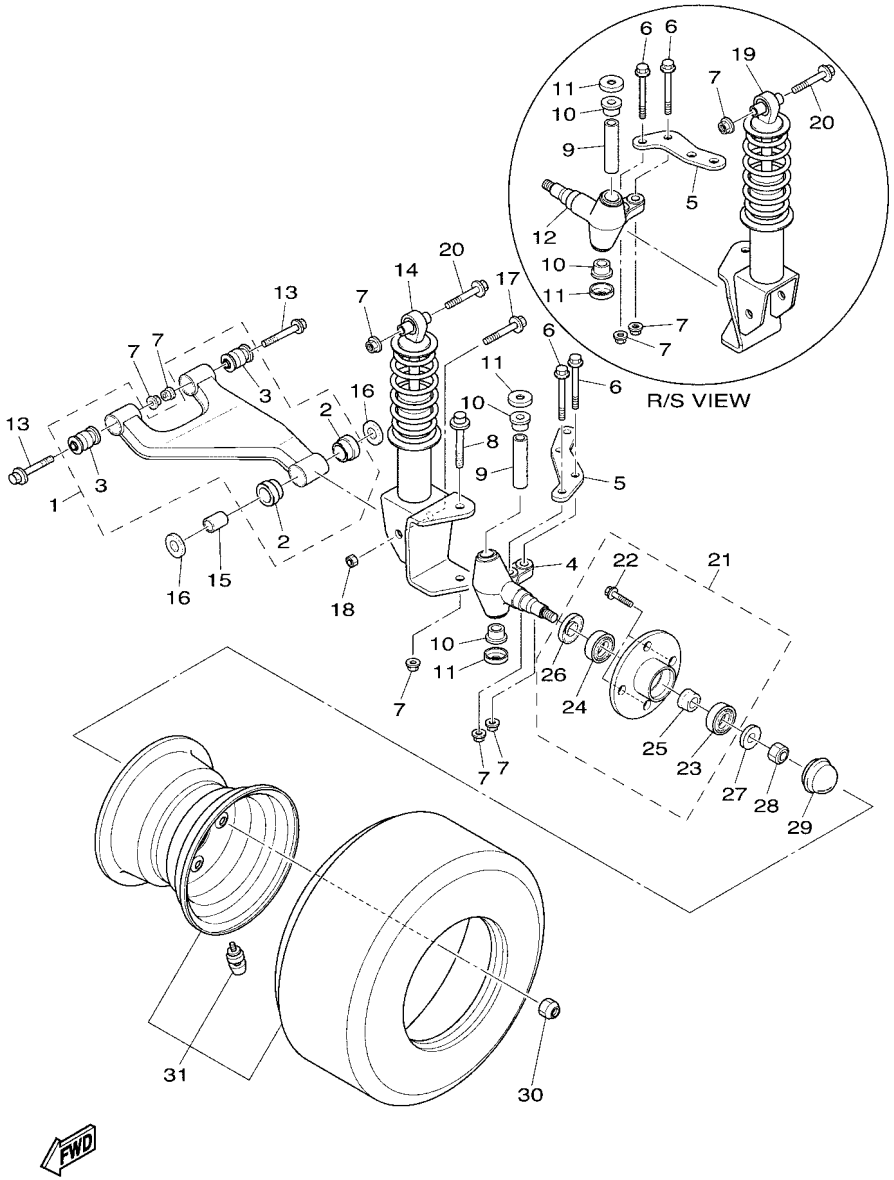

FIG. 13 FRONT SUSPENSION & WHEEL

REF. NO.	PART NO.	DESCRIPTION	J0D4					REMARKS
1	J0B–F3570–10	FRONT LOWER ARM COMP. (LEFT)	2					
2	90381–18801	.BUSH, SOLID	2					
3	2HR–23526–00	.BUSH	2					
4	JU0–F3511–20	KNUCKLE, STEERING 1	1					
5	JW1–F3512–00	ARM, KNUCKLE 1	2					
6	90105–10373	BOLT, FLANGE	4					
7	95602–10200	NUT, S/L FLANGE	12					
8	90105–10219	BOLT, FLANGE	2					
9	2NL–23448–00	SPACER	2					
10	90381–17800	BUSH, SOLID	4					
11	2NL–23517–00	COVER, THRUST 1	4					
12	JU0–F3521–20	KNUCKLE, STEERING 2	1					
13	90105–10267	BOLT, FLANGE	4					
14	J0B–F3350–00	SHOCK ABSORBER ASSY	1					
15	90387–12016	COLLAR	2					
16	401–22128–01	COVER, THRUST 1	4					
17	95812–12080	BOLT, FLANGE	2					
18	90185–12810	NUT, SELF-LOCKING	2					
19	J0B–F3390–00	SHOCK ABSORBER ASSY 2	1					
20	90105–10267	BOLT, FLANGE	2					
21	JC1–F5103–00	HUB BEARING UNIT ASSY	2					
22	90114–12805	.BOLT, SERRATION	4					
23	93306–204X0	.BEARING	1					
24	93306–005Y3	.BEARING	1					
25	90387–241M7	.COLLAR	1					
26	93102–30083	.OIL SEAL	1					
27	90208–14801	WASHER, CONICAL SPRING	2					

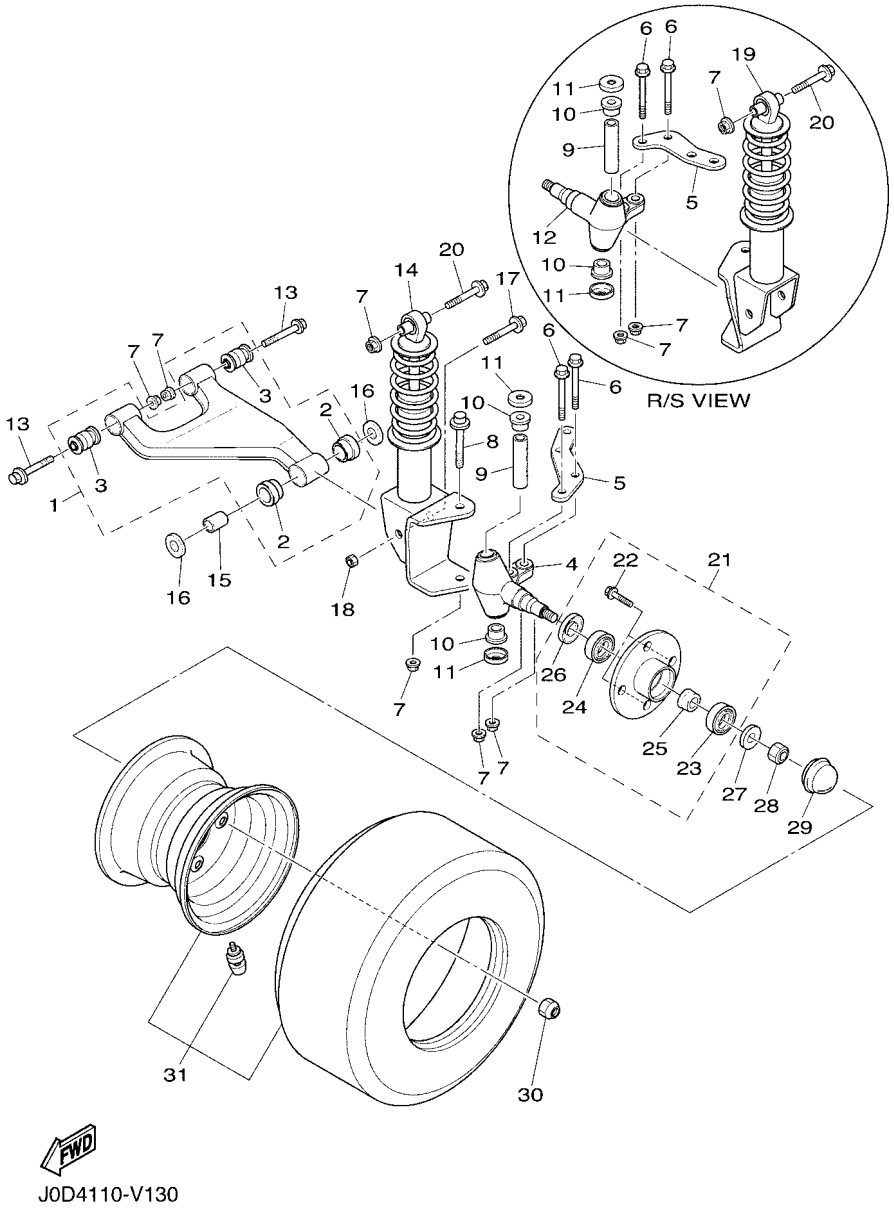

FIG. 13 FRONT SUSPENSION & WHEEL

REF. NO.	PART NO.	DESCRIPTION	J0D4					REMARKS
28	95602–14100	NUT, U	2					
29	JN6–F5118–01	COVER, HUB DUST	2					
30	90179–12262	NUT	8					
31	JC1–F5100–01	WHEEL ASSY (205/65-10 4P)	2					

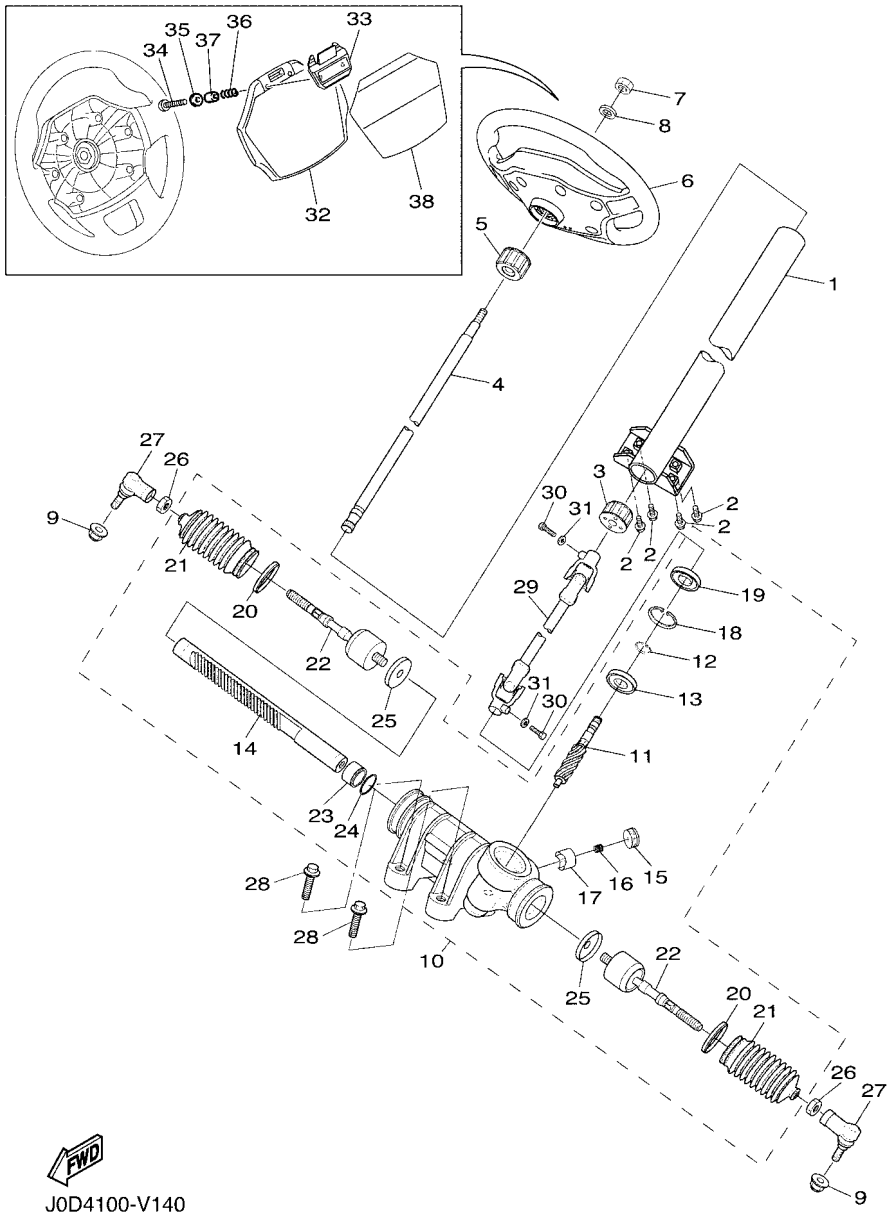

FIG. 14 STEERING

REF. NO.	PART NO.	DESCRIPTION	J0D4					REMARKS
1	J0G–F3811–00	COLUMN, STEERING	1					
2	95812–08020	BOLT, FLANGE	4					
3	JU0–F3857–20	HOLDER	1					
4	JU0–F3828–10	ROD, STEERING	1					
5	JU0–F3857–20	HOLDER	1					
6	J0B–F3838–00	WHEEL, STEERING	1					
7	90185–12008	NUT, SELF-LOCKING	1					
8	92902–12200	WASHER	1					
9	90185–12811	NUT, SELF-LOCKING	2					
10	JW1–F3400–00	STEERING ASSY	1					
11	JW1–F387A–00	.GEAR,PINION	1					
12	JW1–F3183–00	.CIRCLIP	1					
13	JW1–F3812–00	.BEARING, STEERING	1					
14	JW1–F387E–00	.GEAR, RACK	1					
15	5UG–F387G–00	.COVER, ADJUST	1					
16	5UG–F387K–00	.SPRING, PRESSURE	1					
17	5UG–F387F–00	.PAD, PRESSURE	1					
18	5UG–F387J–00	.RING, STOPPER	1					
19	5UG–F3844–00	.SEAL	1					
20	5UG–F3489–00	.BAND	2					
21	5UG–F3527–00	.SEAL, DUST 1	2					
22	JW1–F3837–00	.ROD, TIE 2	2					
23	JW1–F467K–00	.BUSH, CAP	1					
24	JW1–F3866–00	.CIRCLIP	1					
25	JW1–F3894–00	.WASHER, LOCK 1	2					
26	1P0–F3833–00	NUT 1	2					
27	JW8–23841–01	JOINT, UNIVERSAL 1	2					

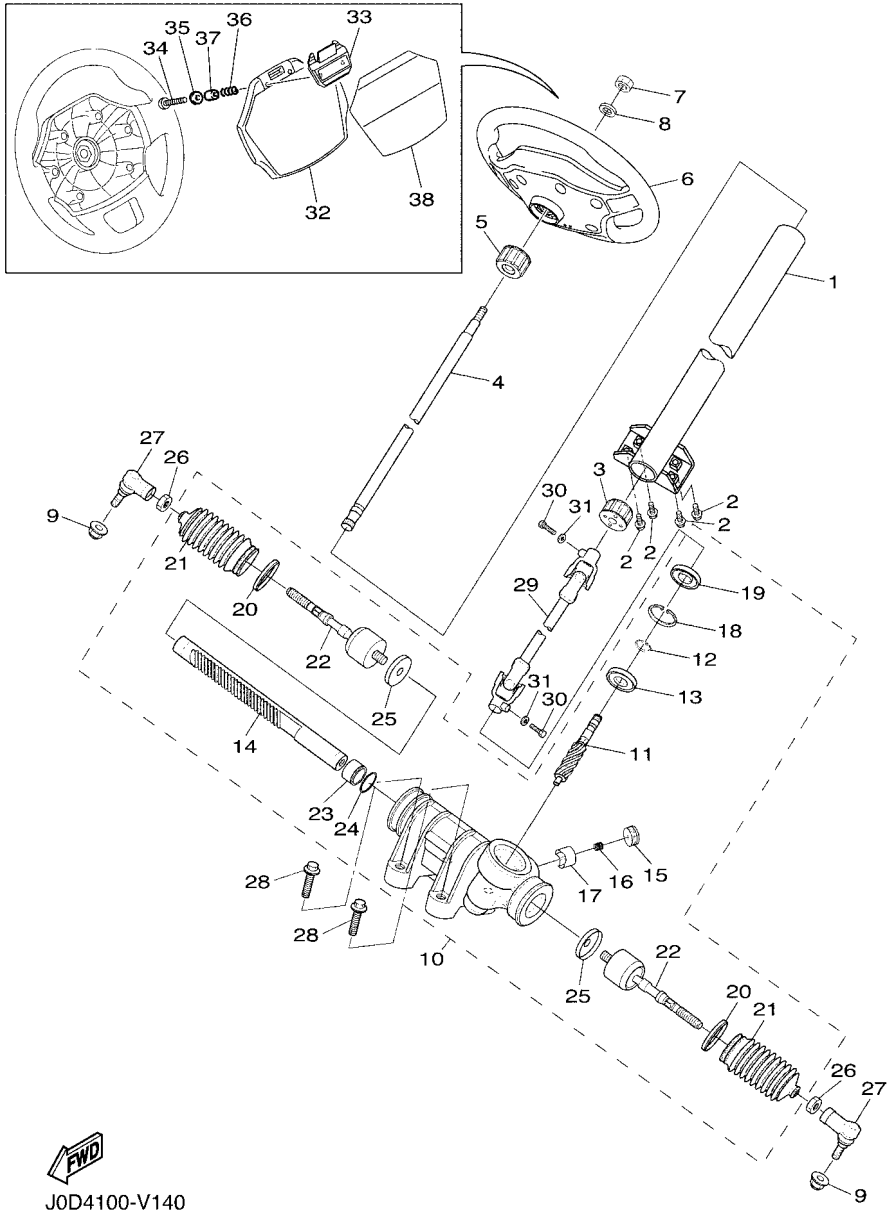

FIG. 14 STEERING

REF. NO.	PART NO.	DESCRIPTION	J0D4					REMARKS
28	90105–10847	BOLT, FLANGE	4					
29	JW1–F3822–01	JOINT 1	1					
30	97012–08030	BOLT	2					
31	92902–08600	WASHER, PLATE	2					
32	J0D–K8357–00	HOLDER 1	1					
33	J0B–K8358–00	HOLDER 2	1					
34	J0B–K7387–00	SCREW	2					
35	90201–04810	WASHER, PLATE	2					
36	J0B–K7363–00	SPRING	2					
37	J0B–K7115–00	COLLAR	2					
38	J0D–K7762–30	LABEL, WARNING 2	1					UR ENGLISH/FRENCH
	J0D–K7762–20	LABEL, WARNING 2	1					UR GERMAN/SPANISH

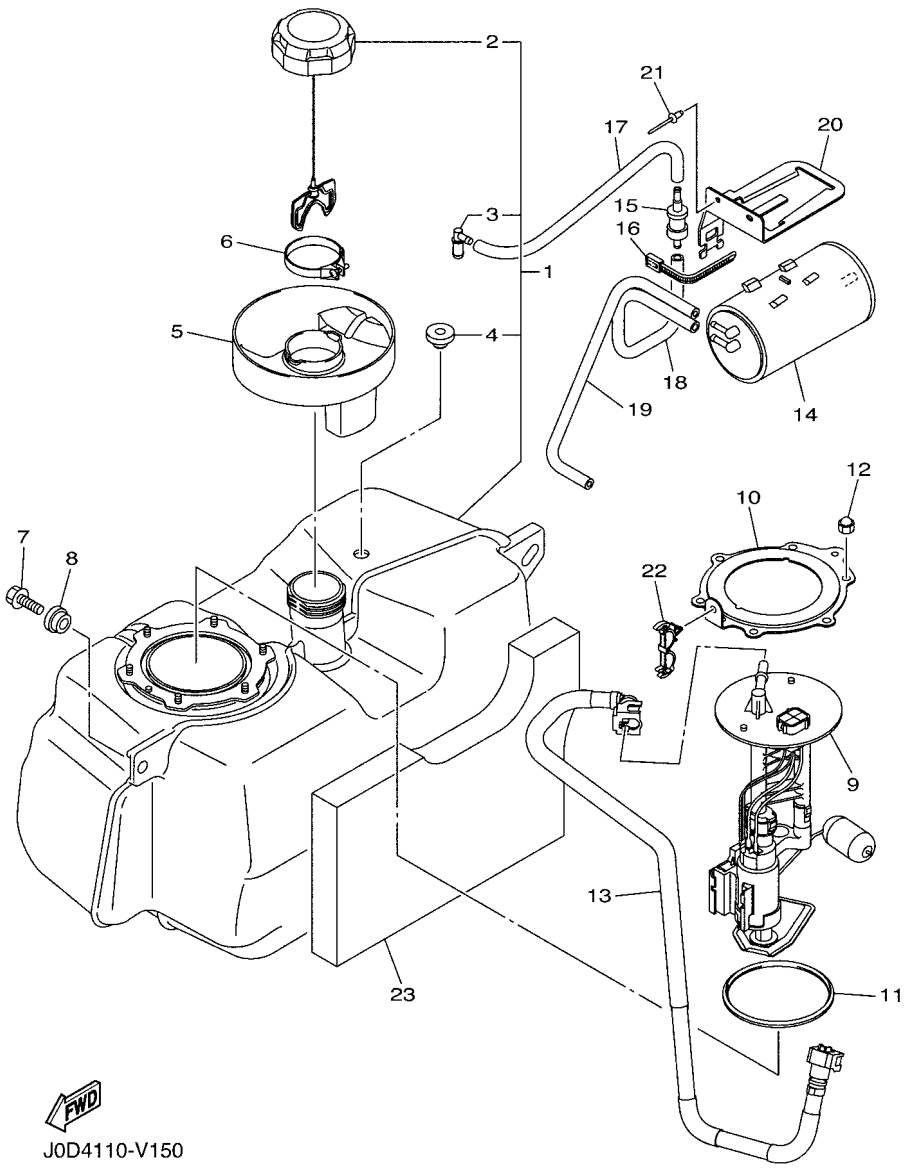

FIG. 15 FUEL TANK

REF. NO.	PART NO.	DESCRIPTION	J0D4					REMARKS
1	JC0–F4111–02	TANK, FUEL	1					
2	JW1–F4610–11	.CAP ASSY	1					
3	JW1–F4112–00	.PIPE	1					
4	JU5–F4375–00	.GROMMET	1					
5	J0B–F4217–00	COVER	1					
6	90450–54008	HOSE CLAMP ASSY	1					
7	JW1–F1738–00	BOLT	2					
8	90560–08251	SPACER	2					
9	J0D–13907–01	FUEL PUMP COMP.	1					
10	JC0–24491–00	BRACKET, FUEL PUMP	1					
11	1S3–24486–00	O-RING	1					
12	95302–06800	NUT, CROWN	6					
13	J0D–13971–00	PIPE, FUEL 1	1					
14	7CC–F4170–01	CANISTER ASSY	1					
15	4WM–24180–00	ROLL OVER VALVE ASSY	1					
16	90464–40825	CLAMP	1					
17	J0B–F4314–00	PIPE 4	1					
18	J0B–F4316–00	PIPE 6	1					
19	J0B–F4317–00	PIPE 7	1					
20	J0B–F419A–00	HOLDER	1					
21	JW7–K7329–00	RIVET	2					
22	90464–18246	CLAMP	1					
23	J0B–K8253–00	PAD, SILENCER 3	1					

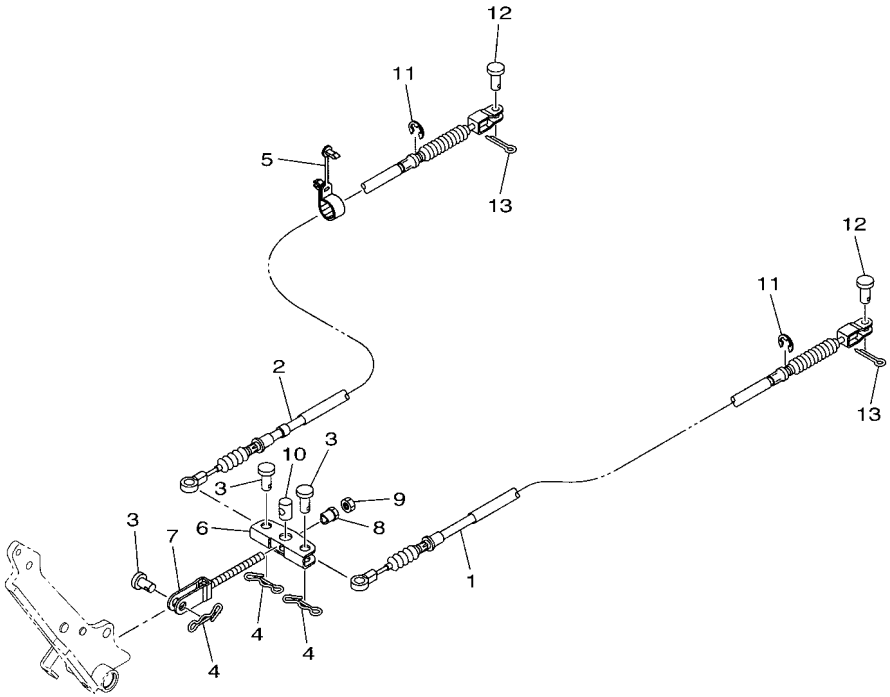

J0B1110-S150

FIG. 16 PEDAL WIRE

REF. NO.	PART NO.	DESCRIPTION	J0D4					REMARKS
1	J0B–F6341–00	WIRE, BRAKE 1	1					
2	J0B–F6351–00	CABLE, BRAKE	1					
3	91702–10026	PIN, CLEVIS	3					
4	90468–20196	CLIP	3					
5	JW7–F312H–00	CLAMP	4					
6	JW8–F5681–10	EQUALIZER, BRAKE	1					
7	JN6–F5685–01	ROD	1					
8	90179–08822	NUT	1					
9	95307–08700	NUT	1					
10	90249–14129	PIN	1					
11	99001–09600	CIRCLIP	2					
12	91702–08018	PIN, CLEVIS	2					
13	91490–25015	PIN. COTTER	2					

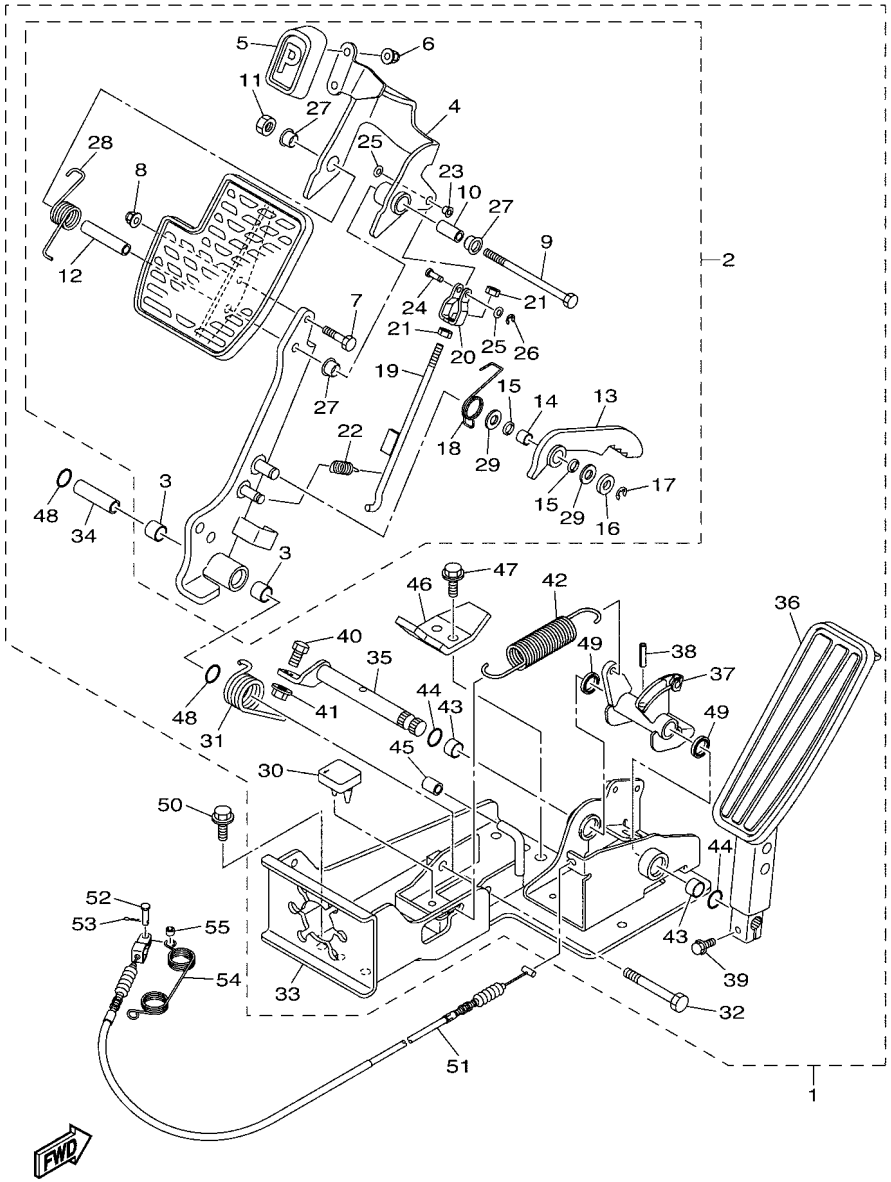

FIG. 17 PEDAL ASSEMBLY

REF. NO.	PART NO.	DESCRIPTION	J0D4					REMARKS
1	J0G–F7850–20	PEDAL ASSY (L.H)	1					
2	J0G–F7200–02	.PEDAL, BRAKE	1					
3	JW8–F7814–21	..BUSH, PEDAL	2					
4	J0G–F5671–00	..PEDAL, PARKING BRAKE	1					
5	J0G–F7854–00	..COVER, PEDAL	1					
6	95607–06200	..NUT, SELF U-FLANGE	2					
7	97012–06020	..BOLT	1					
8	JW8–F8363–00	..NUT	1					
9	J0G–F7416–00	..BOLT, FOOTREST	1					
10	JW8–F639N–00	..COLLAR	1					
11	J0G–F7218–00	..NUT	1					
12	J0G–F7313–00	..COLLAR	1					
13	JW9–F5666–00	..SECTOR, PARKING BRAKE	1					
14	JW8–F7121–00	..BUSH	1					
15	JW9–F7221–00	..SEAL, SHAFT	2					
16	JW8–F7322–00	..WASHER	1					
17	JW8–F3183–00	..CIRCLIP	1					
18	JW8–F7426–01	..SPRING, RETURN	1					
19	JW9–F7231–10	..ROD, BRAKE	1					
20	JW9–F7232–00	..END, ROD 2	1					
21	JW8–F7318–00	..NUT	2					
22	JW8–F6314–00	..SPRING	1					
23	J0G–F7814–00	..BUSH, PEDAL	1					
24	JW9–F7228–00	..PIN, JOINT	1					
25	JW8–F8323–00	..WASHER, LEG SHIELD	2					
26	JW8–F5415–00	..CIRCLIP	1					
27	90386–12800	..BUSH	3					

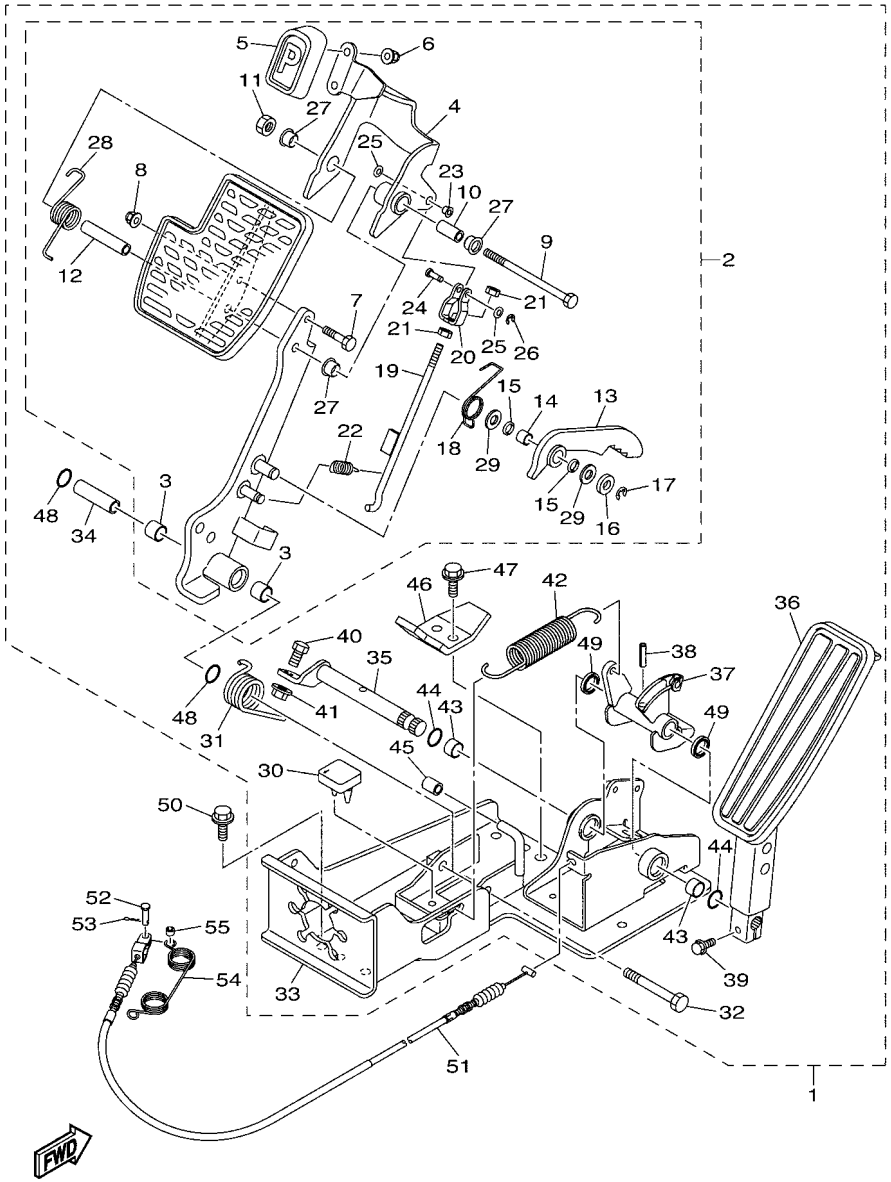

FIG. 17 PEDAL ASSEMBLY

REF. NO.	PART NO.	DESCRIPTION	J0D4					REMARKS
28	J0G–F7825–00	..SPRING, RETURN	1					
29	JW8–F7119–00	..WASHER	2					
30	JW9–F7245–10	.PAD, BRAKE PEDAL	1					
31	JW8–F7316–01	.SPRING, SIDE STAND	1					
32	JW8–F7217–00	.BOLT	1					
33	J0G–F7445–10	.PLATE 1	1					
34	JW8–F7213–20	.COLLAR	1					
35	J0G–F7853–10	.SHAFT, PEDAL 1	1					
36	J0G–F7871–01	.PEDAL, ACCELERATOR	1					
37	J0G–F7872–00	.ARM, ACCELERATOR PEDAL	1					
38	JW8–F7438–00	.PIN, CLEVIS	1					
39	JW8–F7434–00	.BOLT	1					
40	JW8–F7317–00	.BOLT	1					
41	JW8–F7118–00	.NUT	1					
42	J0G–F815H–10	.SPRING	1					
43	J0G–F5922–00	.WASHER	2					
44	JW8–F4486–00	.O-RING	2					
45	JW9–F5673–00	.DAMPER, BRAKE	1					
46	JW9–F7246–20	.NAIL, BRAKE	1					
47	JW8–F8331–00	.BOLT, LEG SHIELD	2					
48	JW8–F4486–00	.O-RING	2					
49	J0G–F3145–00	.OIL SEAL	2					
50	95812–08020	BOLT, FLANGE	6					
51	J0B–F6311–00	WIRE, THROTTLE 1	1					
52	91702–05014	PIN, CLEVIS	1					
53	90468–10049	CLIP	1					
54	90508–16460	SPRING, TORSION	1					

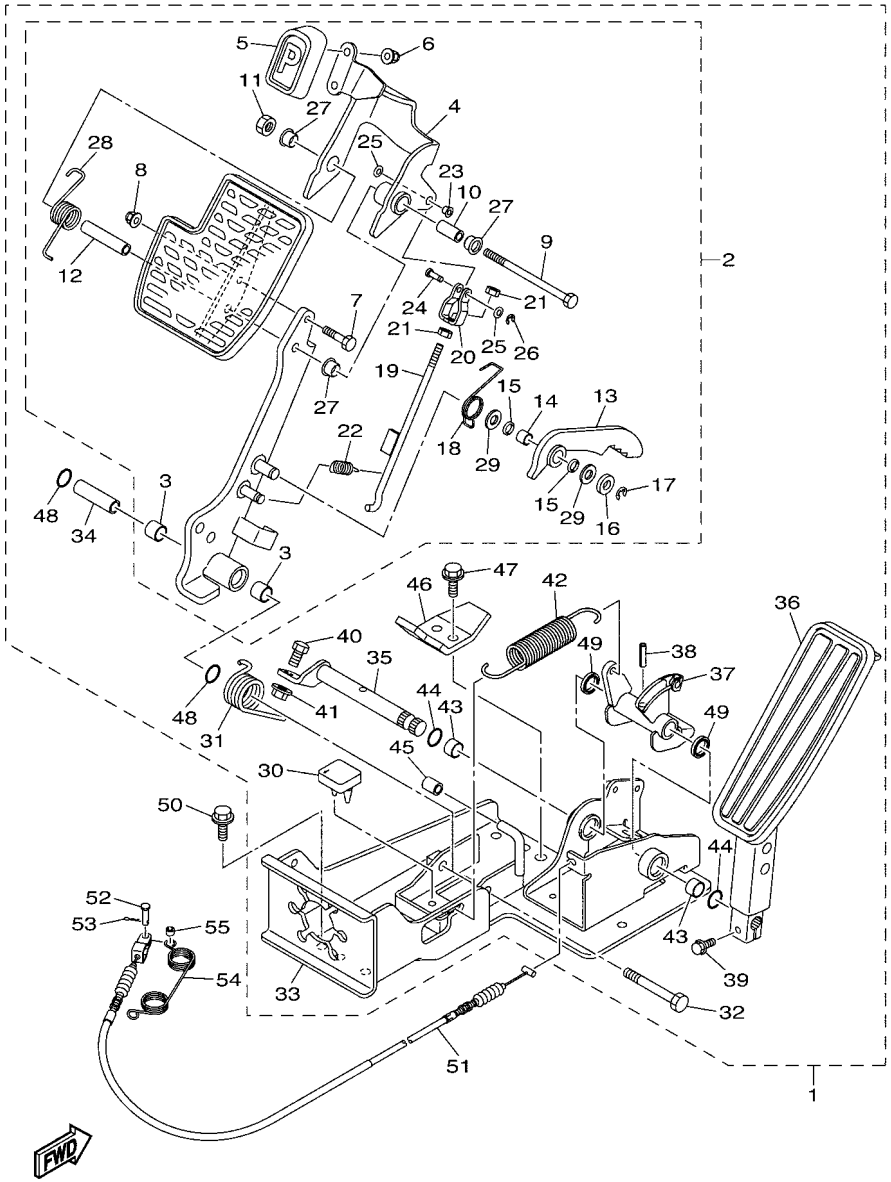

J0B4110-V170

FIG. 17 PEDAL ASSEMBLY

REF. NO.	PART NO.	DESCRIPTION	J0D4					REMARKS
55	90560–05001	SPACER	1					

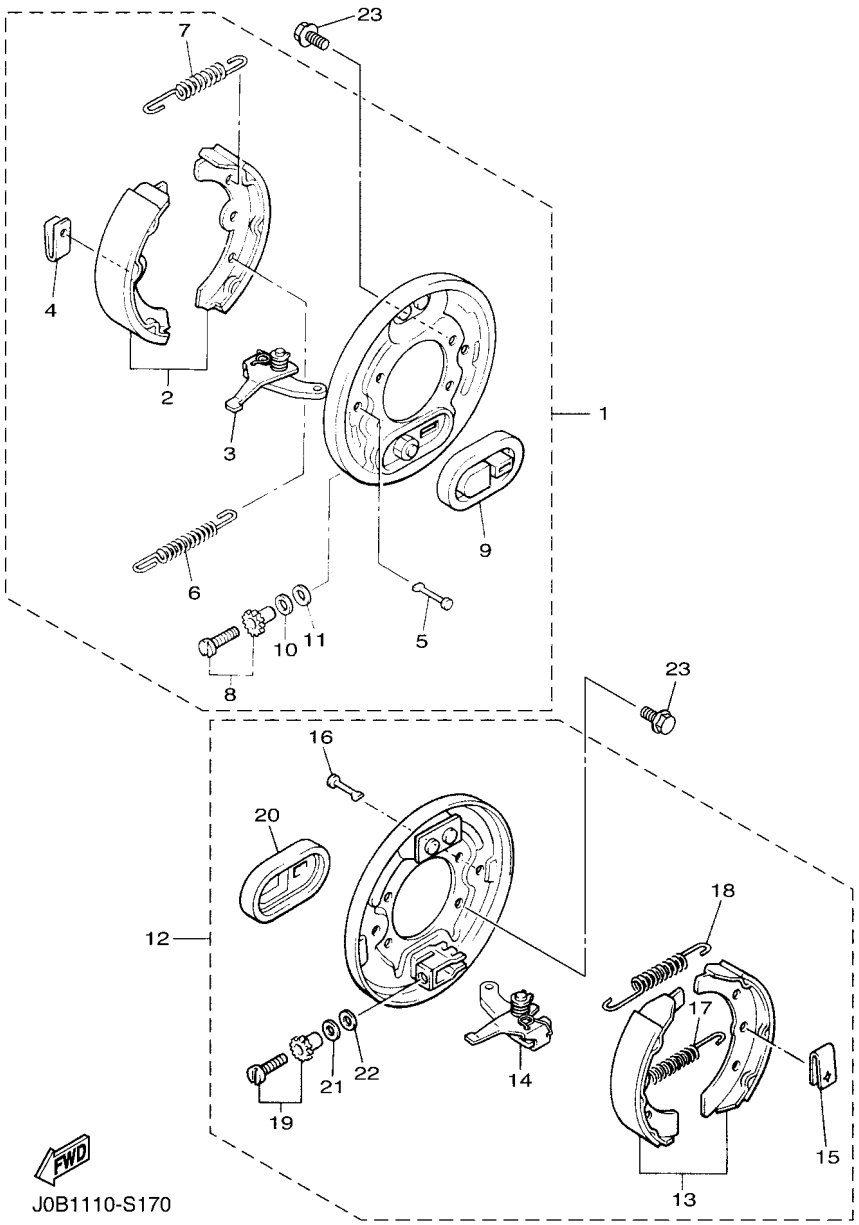

FIG. 18 BRAKE

REF. NO.	PART NO.	DESCRIPTION	J0D4					REMARKS
1	JW8–F7280–10	BACKING PLATE ASSY 1	1					
2	JN9–W2536–11	.BRAKE SHOE SET	1					
3	J38–27204–00	.LEVER ASSY 1	1					
4	JW8–F7281–00	.SPRING, SHOE CLAMP	2					
5	J10–27282–00	.PIN, SHOE HOLD DOWN	2					
6	90506–20281	.SPRING, TENSION	1					
7	90506–14001	.SPRING, TENSION	1					
8	J55–27270–00	.ADJUSTER ASSY	1					
9	JW8–F7286–00	.COVER, DUST	1					
10	90201–121H9	.WASHER, PLATE	1					
11	90201–121H8	.WASHER, PLATE	1					
12	JW8–F7290–10	BACKING PLATE ASSY 2	1					
13	JN9–W2536–11	.BRAKE SHOE SET	1					
14	J38–27205–00	.LEVER ASSY 2	1					
15	JW8–F7281–00	.SPRING, SHOE CLAMP	2					
16	J10–27282–00	.PIN, SHOE HOLD DOWN	2					
17	90506–20281	.SPRING, TENSION	1					
18	90506–14001	.SPRING, TENSION	1					
19	J55–27260–00	.ADJUSTER ASSY	1					
20	JW8–F7286–00	.COVER, DUST	1					
21	90201–121H9	.WASHER, PLATE	1					
22	90201–121H8	.WASHER, PLATE	1					
23	90105–082A0	BOLT, FLANGE	8					

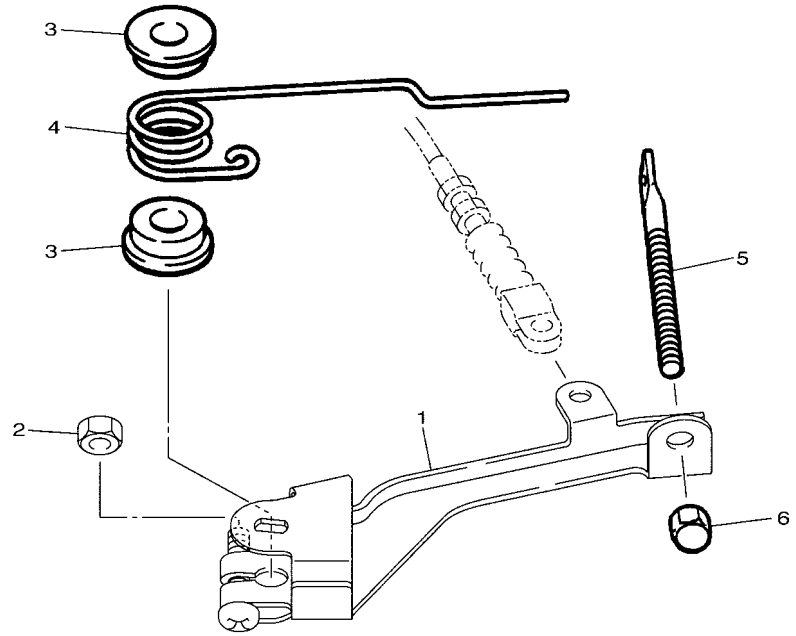

J0B1110-S180

FIG. 19 GOVERNOR

REF. NO.	PART NO.	DESCRIPTION	J0D4					REMARKS
1	J0B–27951–00	LEVER, SPEED LIMITER	1					
2	95302–06600	NUT, HEXAGON	1					
3	90386–08141	BUSH	2					
4	90508–40678	SPRING, TORSION	1					
5	J38–27959–00	SCREW, ADJUSTING	1					
6	95602–06200	NUT, SELF-LOCKING	1					

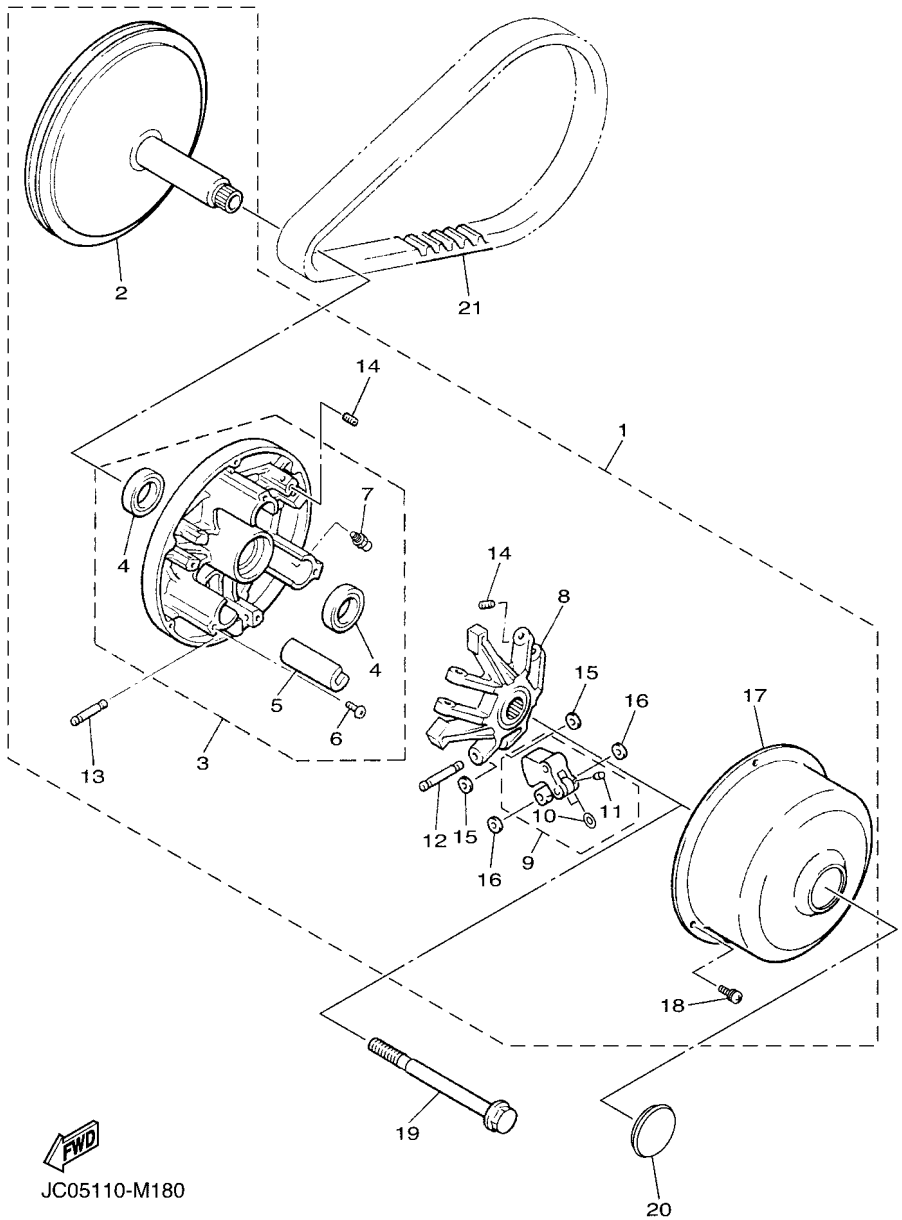

FIG. 20 PRIMARY SHEAVE

REF. NO.	PART NO.	DESCRIPTION	J0D4					REMARKS
1	J0B–G6201–01	PRIMARY CLUTCH ASSY	1					
2	JW8–G6210–01	.PRIMARY FIXED SHEAVE COMP.	1					
3	J0B–G6220–01	.PRIMARY SLIDING SHEAVE COMP.	1					
4	JW8–G624A–00	..OIL SEAL 1	2					
5	JW8–G6253–00	..SLIDER	3					
6	JW8–G4189–00	..SCREW	3					
7	JW8–F135J–00	..NIPPLE	1					
8	JW8–G6251–21	.SPIDER	1					
9	JW8–G6205–22	.WEIGHT LINK ASSY	3					
10	JW8–G5618–00	..WASHER, 1	2					
11	90113–04803	..BOLT, SET	2					
12	JW8–G6236–20	.PIN, WEIGHT	3					
13	JW8–G6237–20	.PIN, WEIGHT 2	3					
14	90113–04803	.BOLT, SET	6					
15	JW8–G5618–00	.WASHER, 1	6					
16	JW8–G5621–00	.WASHER, 2	6					
17	J0B–G6231–00	.CAP	1					
18	JW8–G5282–00	.SCREW	3					
19	JW8–G6249–00	BOLT	1					
20	JW8–G7339–00	PLUG	1					
21	J0D–G6241–00	BELT	1					

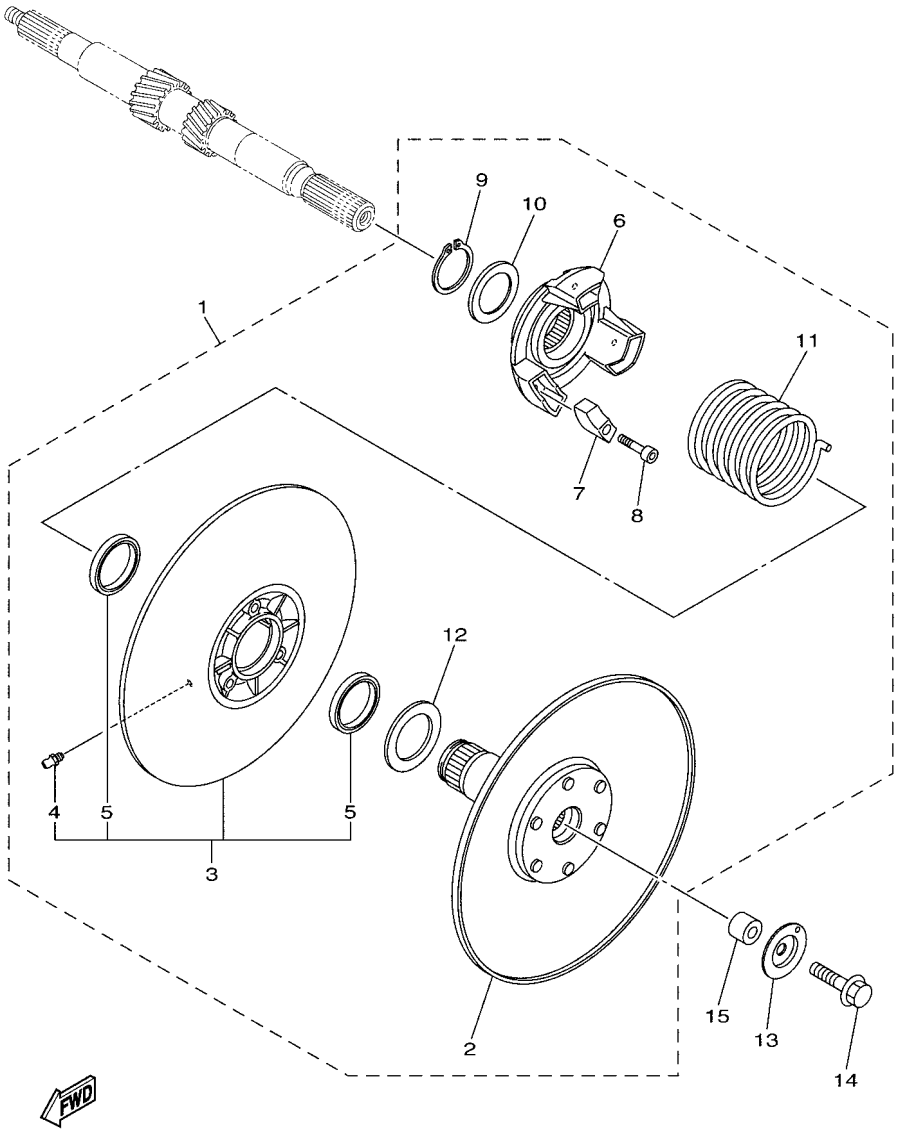

J0D2100-T210

FIG. 21 SECONDARY SHEAVE

REF. NO.	PART NO.	DESCRIPTION	J0D4					REMARKS
1	JW8–G6202–23	SECONDARY SHEAVE ASSY	1					
2	JW8–G6260–23	.SECONDARY FIXED SHEAVE COMP.	1					
3	JW8–G6270–21	.SECONDARY SLIDING SHEAVE COMP.	1					
4	JW8–F135J–00	..NIPPLE	1					
5	JW8–G624B–00	..OIL SEAL 2	2					
6	JW8–G6284–10	.SEAT, SECONDARY SPRING	1					
7	JW8–E7688–00	.SHOE, RAMP	3					
8	JW8–G6159–00	.BOLT 3	3					
9	JW8–G5531–00	.CLIP, DRIVE SHAFT	1					
10	JW8–G6374–00	.COLLAR, SPRING	1					
11	JW8–G6275–10	.SPRING, CLUTCH 1	1					
12	JW8–G5677–00	.WASHER	1					
13	90209–08013	WASHER	1					
14	90105–08260	BOLT, FLANGE	1					
15	JW8–G5697–20	COLLAR	1					

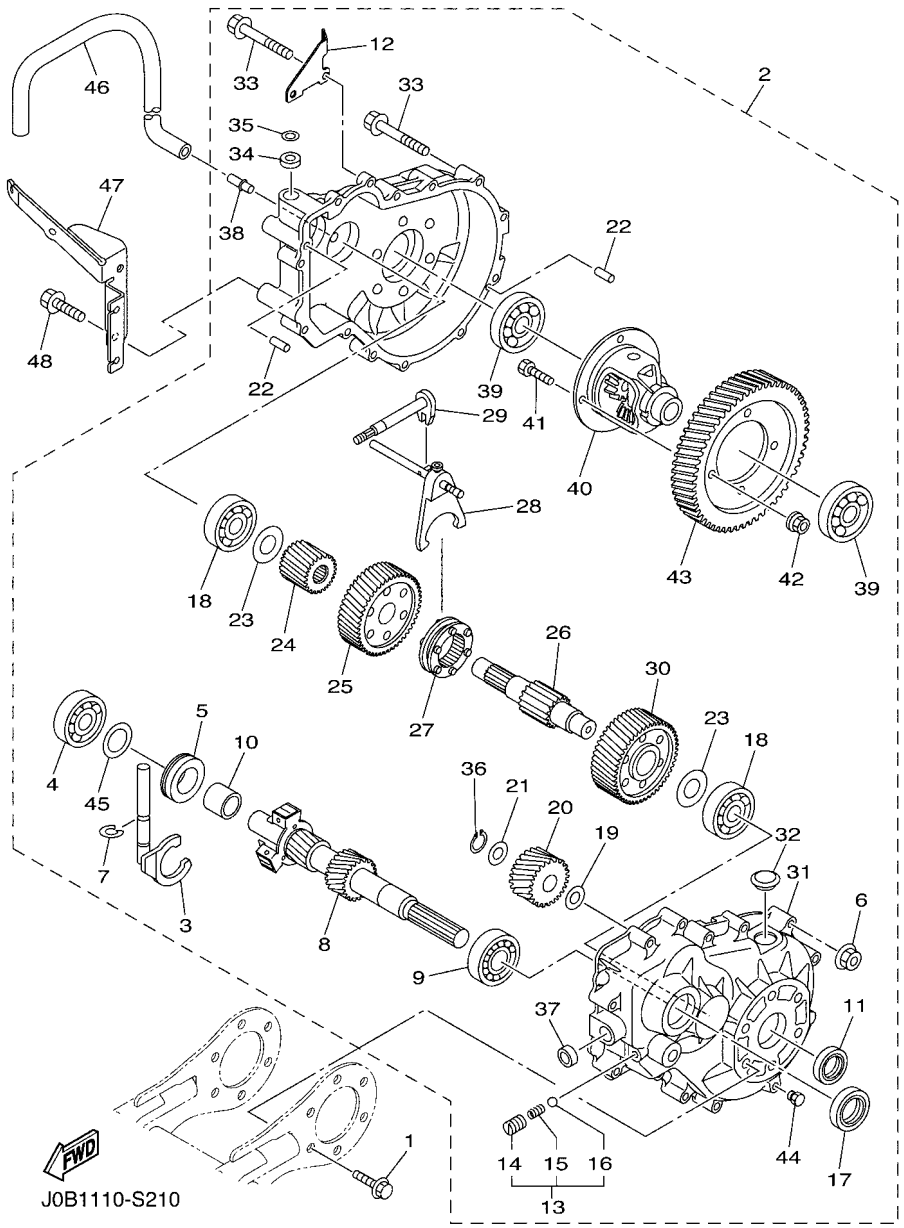

FIG. 22 TRANSMISSION

REF. NO.	PART NO.	DESCRIPTION	J0D4					REMARKS
1	95812–10020	BOLT, FLANGE	6					
2	J0D–G6301–00	TRANSMISSION ASSY	1					
3	J0B–G633E–00	.BAR 1	1					
4	93306–303Y6	.BEARING	1					
5	JW8–E1923–00	.SLEEVE, GOVERNOR	1					
6	J0B–G2391–00	.NUT 1	13					
7	JU0–F722H–00	.RETAINER	1					
8	J0D–G6320–00	.INPUT SHAFT ASSY	1					
9	J0B–G6164–00	.BEARING 1	1					
10	J0B–G3127–00	.COLLAR	1					
11	J0B–G3812–00	.SEAL, DUST	2					
12	J0B–G6555–00	.BRACKET 2	1					
13	JU0–G6376–00	.SPRING SET	1					
14	90113–08803	..BOLT, SET	1					
15	90501–10852	..SPRING, COMPRESSION	1					
16	93500–06826	..BALL	1					
17	93102–25868	.OIL SEAL	1					
18	J0B–G580H–00	.BEARING ASSY	2					
19	90201–208H9	.WASHER, PLATE	1					
20	J0B–G6356–00	.GEAR, IDLER	1					
21	90201–208J0	.WASHER, PLATE	1					
22	93606–10842	.PIN, DOWEL	2					
23	J0B–G1297–00	.WASHER, 1	2					
24	J0B–G6316–00	.GEAR, PINION 1	1					
25	J0B–G6326–00	.GEAR, WHEEL 1	1					
26	J0B–G633G–00	.SHAFT	1					
27	J0B–G6153–00	.COLLAR, GUIDE	1					

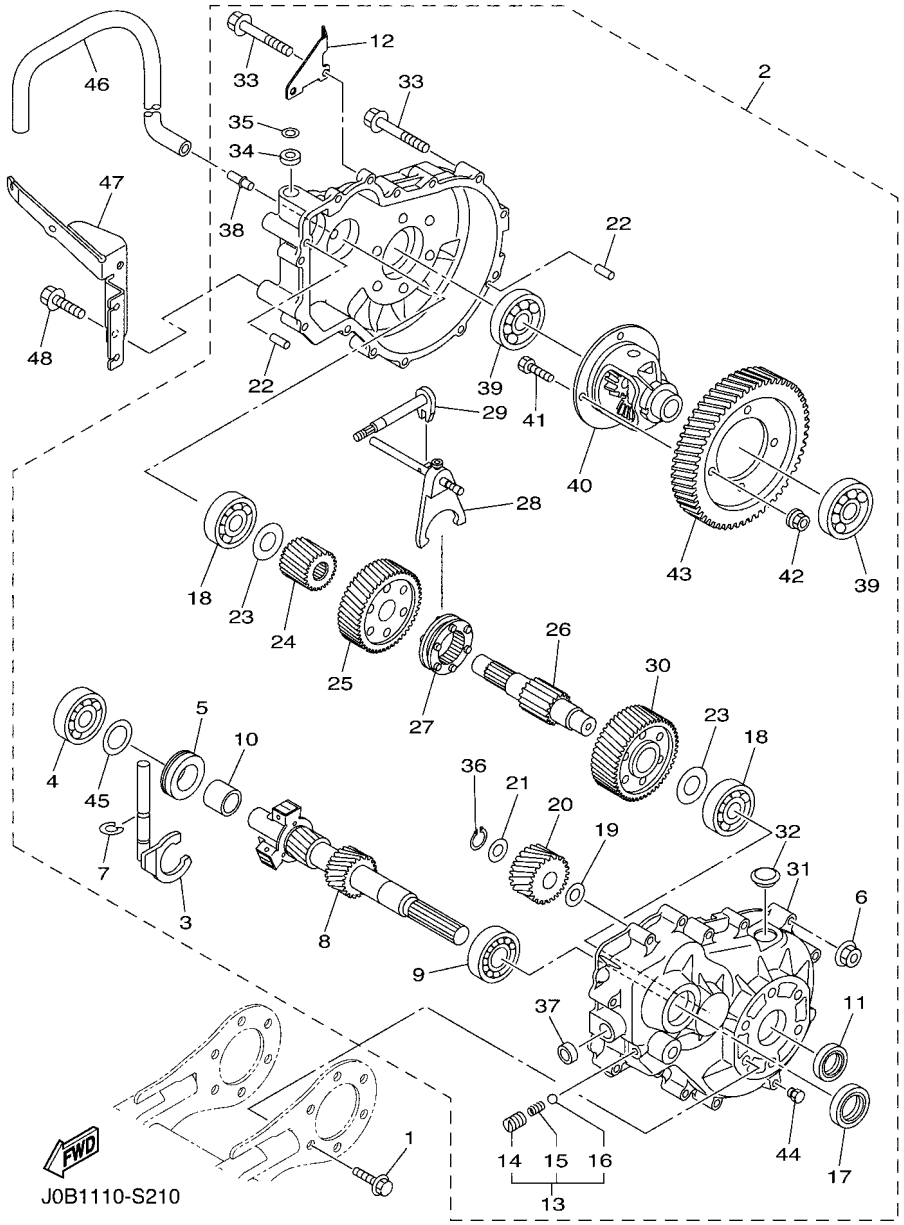

FIG. 22 TRANSMISSION

REF. NO.	PART NO.	DESCRIPTION	J0D4					REMARKS
28	J0B–G638E–00	.BAR, SHIFT 2	1					
29	J0B–G638A–00	.BAR, SHIFT 1	1					
30	J0D–G6327–00	.GEAR, WHEEL 2	1					
31	J0B–G6314–00	.COVER, TRANSMISSION	1					
32	JN3–G6432–00	.STOPPER	1					
33	J0B–G1148–00	.BOLT	13					
34	93109–10820	.OIL SEAL	1					
35	JU0–F723F–00	.WASHER, SPECIAL	1					
36	JW8–F47E3–00	.CIRCLIP	1					
37	93104–11829	.OIL SEAL	1					
38	JW8–G5378–00	.NIPPLE, HOSE	1					
39	93306–007Y0	.BEARING	2					
40	J0B–G6410–00	.DIFFERENTIAL ASSY.	1					
41	JC1–G2544–00	.BOLT	4					
42	90170–10840	.NUT	4					
43	J0B–G6355–00	.GEAR, PRIMARY	1					
44	J0B–G5148–00	.PLUG, DRAIN	1					
45	JN3–G6344–00	.SHIM, 0.76MM (0.030IN)	1					
46	JW8–G2541–00	PIPE 1	1					
47	J0B–G6556–00	BRACKET 3	1					
48	90105–08867	BOLT, FLANGE	2					

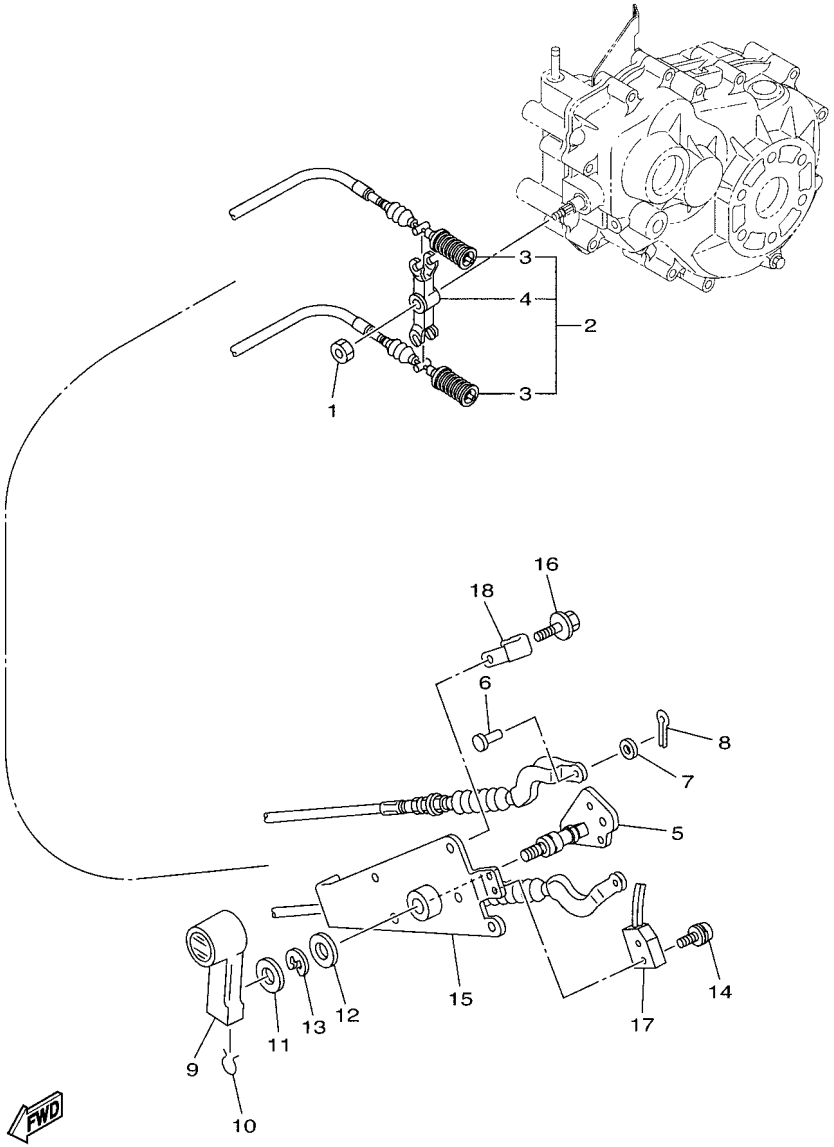

J0B1110-S220

FIG. 23 SHIFTER & CABLES

REF. NO.	PART NO.	DESCRIPTION	J0D4					REMARKS
1	95602–08100	NUT, U	1					
2	J0B–G8330–00	CABLE END ASSY	1					
3	J0B–G6371–00	.WIRE, SHIFT	2					
4	JW8–G6383–10	.LEVER, SHIFT 2	1					
5	J0B–G6382–00	LEVER, SHIFT 1	1					
6	91702–06014	PIN, CLEVIS	2					
7	92902–06600	WASHER, PLATE	2					
8	91402–20012	PIN, COTTER	2					
9	JN3–G6381–00	KNOB, SHIFT	1					
10	JN3–G6376–00	SPRING SET	1					
11	90201–208S8	WASHER, PLATE	1					
12	90201–198S7	WASHER, PLATE	1					
13	99009–19400	CIRCLIP	1					
14	97602–04316	SCREW, PAN HEAD WITH WASHER	2					
15	J0B–G6372–10	BRACKET, SHIFT WIRE	1					
16	90105–06831	BOLT, FLANGE	3					
17	JN3–82617–01	SWITCH	1					
18	90465–06038	CLAMP	1					

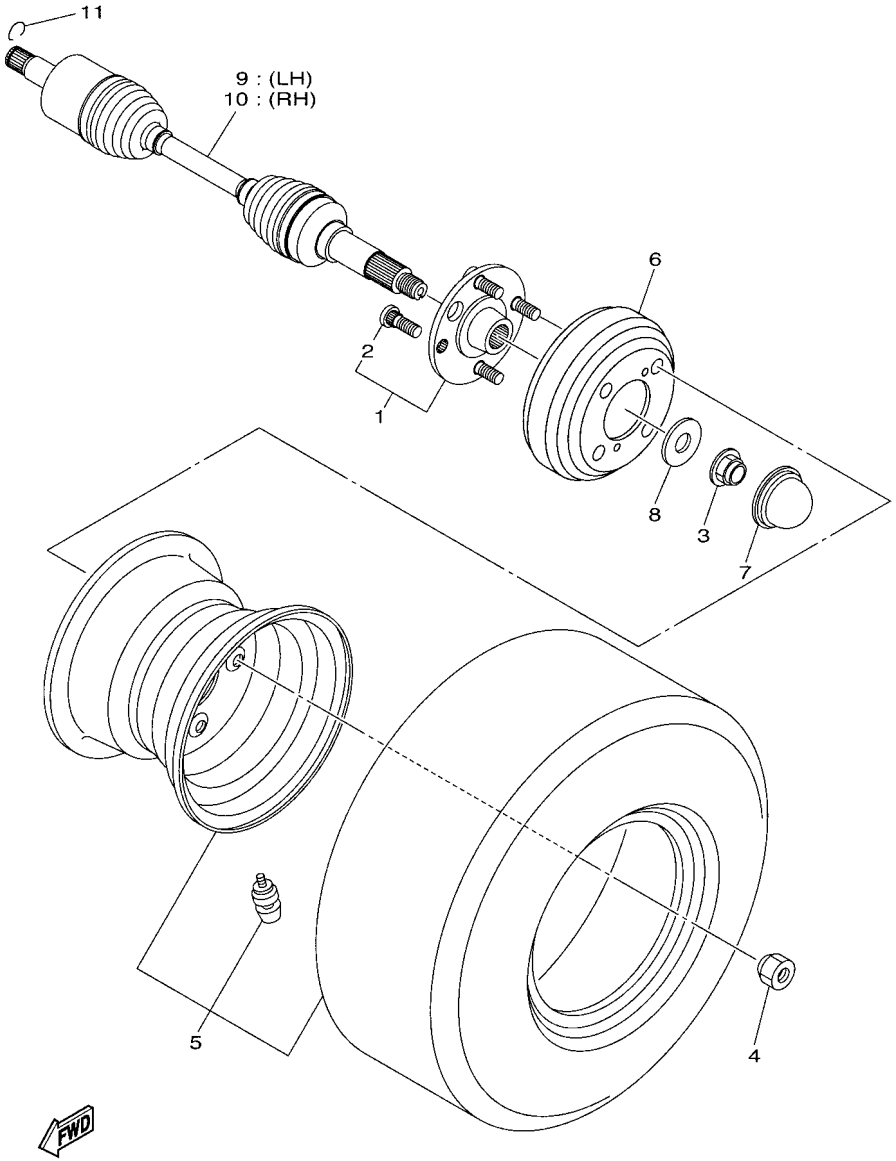

J0D1100-S240

FIG. 24 REAR AXLE & WHEEL

REF. NO.	PART NO.	DESCRIPTION	J0D4					REMARKS
1	J0B–F5310–10	HUB ASSY	2					
2	90114–12006	.BOLT, SERRATION	4					
3	90179–20016	NUT	2					
4	90179–12262	NUT	8					
5	JC1–F5100–01	WHEEL ASSY (205/65-10 4P)	2					
6	JW3–G6521–00	DRUM	2					
7	JW8–F5118–00	COVER, HUB DUST	2					
8	90201–20035	WASHER, PLATE	2					
9	J0B–F518F–00	DRIVE SHAFT ASSY	1					
10	J0B–F518G–00	DRIVE SHAFT ASSY	1					
11	93450–22119	CIRCLIP	2					

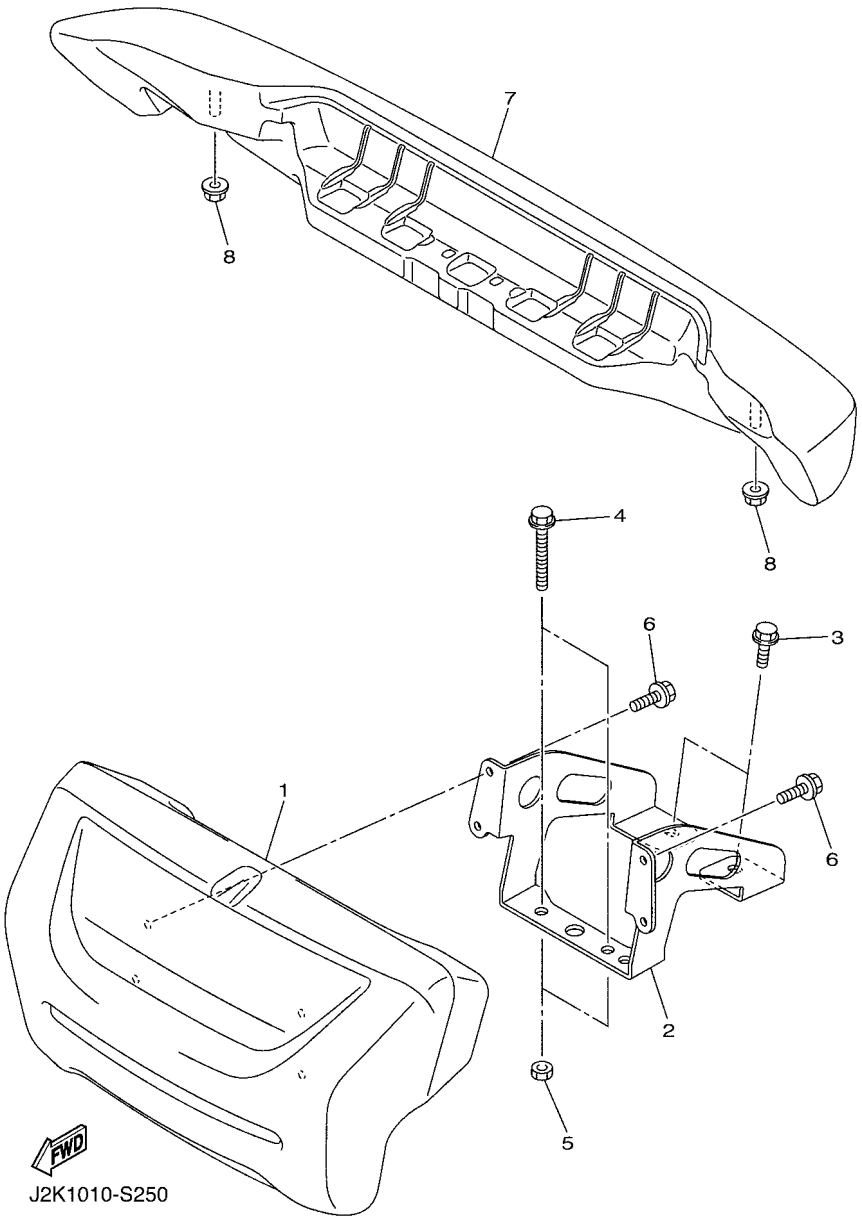

FIG. 25 BUMPER

REF. NO.	PART NO.	DESCRIPTION	J0D4					REMARKS
1	J0B–K7510–01	FRONT BUMPER COMP.	1					
2	J0B–K8164–00	STAY, FRONT BUMPER (L.H)	1					
3	95812–08016	BOLT, FLANGE	2					
4	95812–08050	BOLT, FLANGE	2					
5	95302–08700	NUT, HEXAGON	2					
6	95822–06012	BOLT, FLANGE	4					
7	J0B–K7540–00	REAR BUMPER COMP.	1					
8	95602–10200	NUT, S/L FLANGE	2					

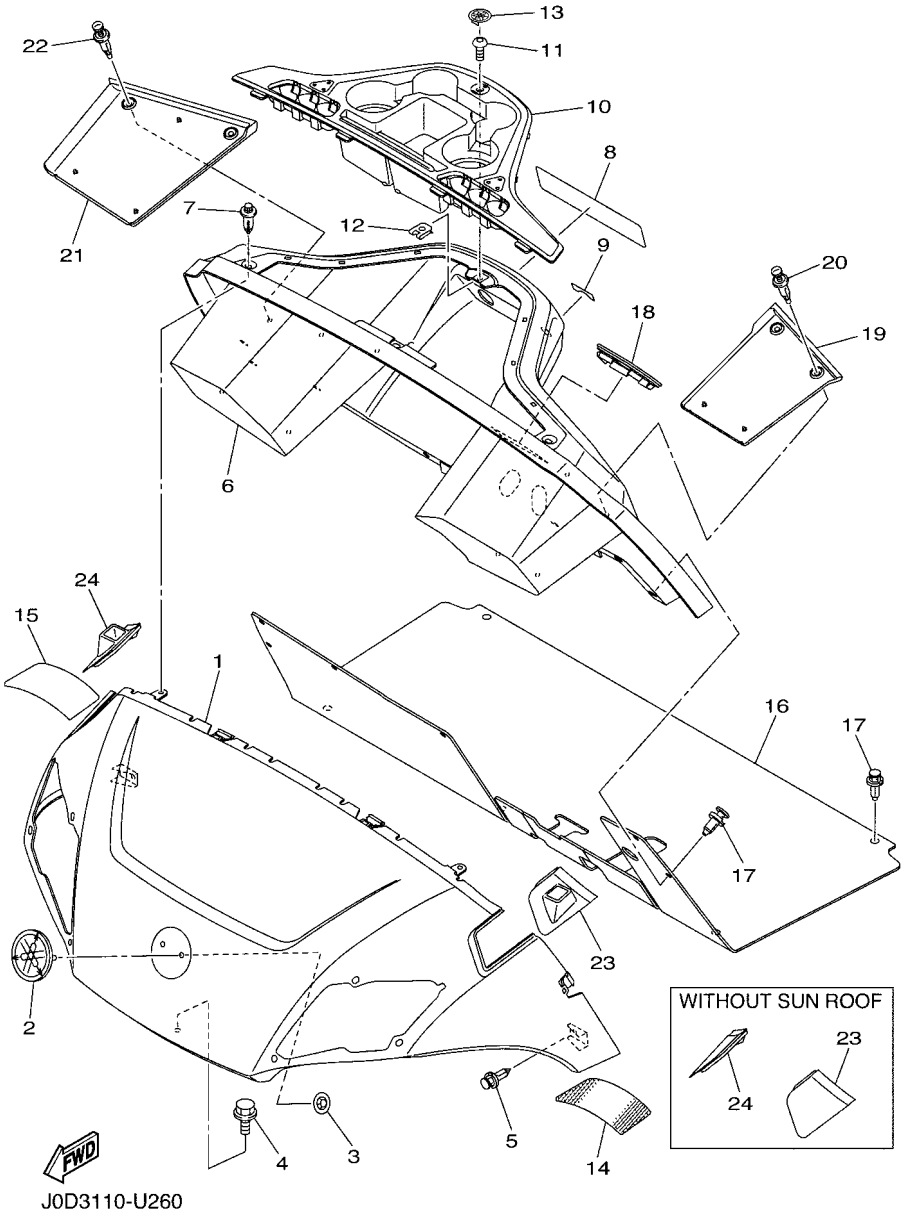

FIG. 26 BODY

REF. NO.	PART NO.	DESCRIPTION	J0D4					REMARKS
1	J0D–K8115–A0	COWL, FRONT	1					UR FOR BW1
	J0D–K8115–00	COWL, FRONT	1					UR FOR DNBME
	J0D–K8115–30	COWL, FRONT	1					UR FOR LNMP
	J0D–K8115–70	COWL, FRONT	1					UR FOR DRMV
	J0D–K8115–80	COWL, FRONT	1					UR FOR BMG
	J0D–K8115–90	COWL, FRONT	1					UR FOR VPBM6
	J0D–K8115–T0	COWL, FRONT	1					UR FOR MNYM2
	J0D–K8115–U0	COWL, FRONT	1					UR FOR MDNM7
	J0D–K8115–V0	COWL, FRONT	1					UR FOR MDOM1
2	J0B–F4161–00	EMBLEM 1	1					
3	JU0–K7573–00	NUT, SPECIAL	2					
4	90105–06831	BOLT, FLANGE	1					
5	90269–06804	RIVET	2					
6	J0D–K8114–01	PANEL, FRONT	1					
7	90269–08001	RIVET	3					
8	J0D–K7768–00	LABEL, WARNING 8	1					UR ENGLISH
	J0D–K7768–10	LABEL, WARNING 8	1					UR ENGLISH/FRENCH
	J0D–K7768–20	LABEL, WARNING 8	1					UR GERMAN
	J0D–K7768–30	LABEL, WARNING 8	1					UR SPANISH
9	J0D–K8282–00	PLATE, SWITCH PANEL	1					
10	J0B–K835E–00	HOLDER, BEVERAGE	1					
11	90111–05805	BOLT,HEX. SOCKET BUTTON	1					
12	90183–05008	NUT, SPRING	1					
13	J0B–H2370–00	PLUG CAP ASSY	1					
14	J0D–H333B–00	REFLECTOR 1	1					
15	J0D–H334B–00	REFLECTOR, 2	1					
16	J0D–K8233–00	MAT, MAIN FLOOR 3	1					

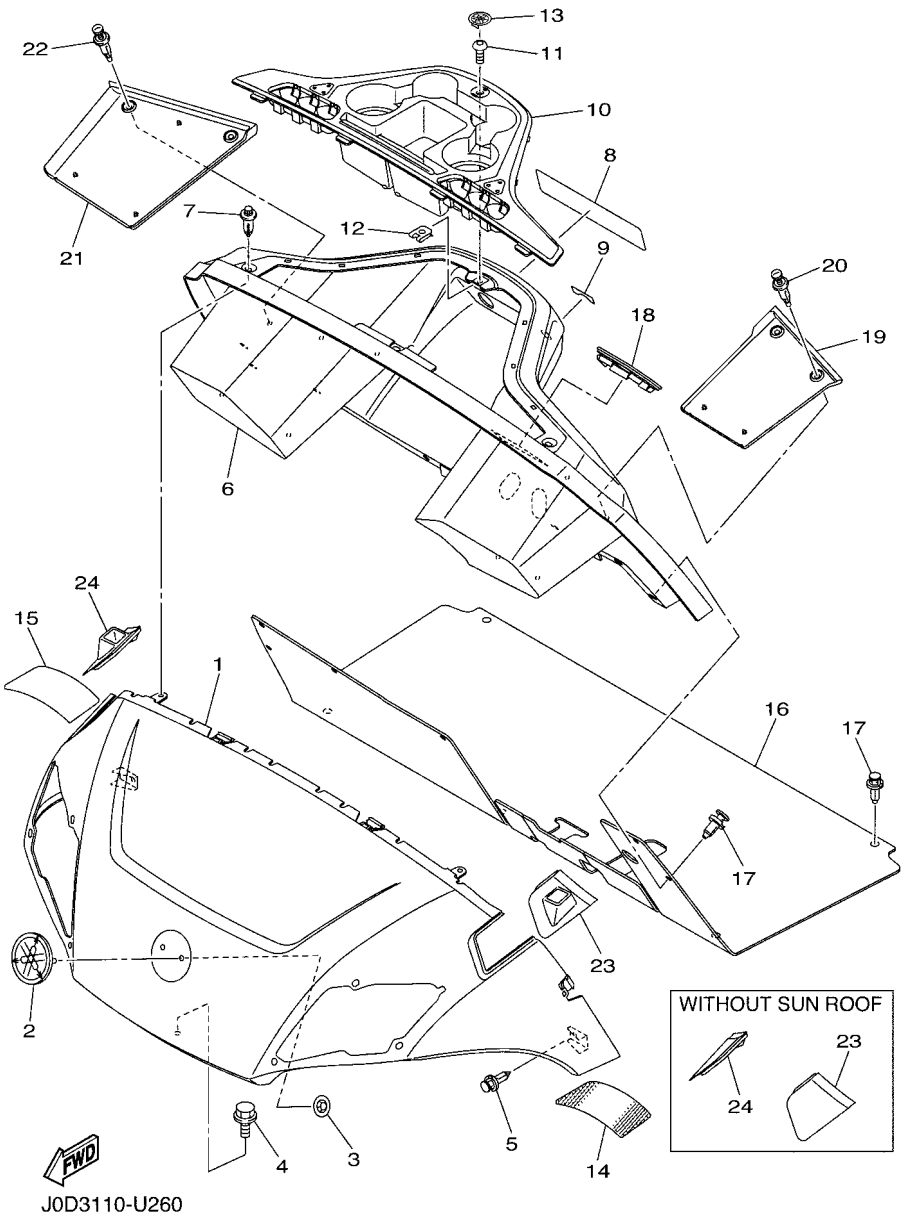

FIG. 26 BODY

REF. NO.	PART NO.	DESCRIPTION	J0D4					REMARKS
17	90269–09003	RIVET	12					
18	J0B–K8273–10	COVER, HOLE	1					
19	J0B–K8243–00	MAT, REAR BODY SIDE (LH)	1					
20	90269–07805	RIVET	2					
21	J0B–K8244–00	MAT, REAR BODY SIDE (RH)	1					
22	90269–07805	RIVET	2					
23	J1B–K832F–00	GROMMET, ROOF SUPPORT 1	1					WITH SUN ROOF
	J0B–K832F–00	GROMMET, ROOF SUPPORT 1	1					WITHOUT SUN ROOF
24	J1B–K832G–00	GROMMET, ROOF SUPPORT 2	1					WITH SUN ROOF
	J0B–K832G–00	GROMMET, ROOF SUPPORT 2	1					WITHOUT SUN ROOF

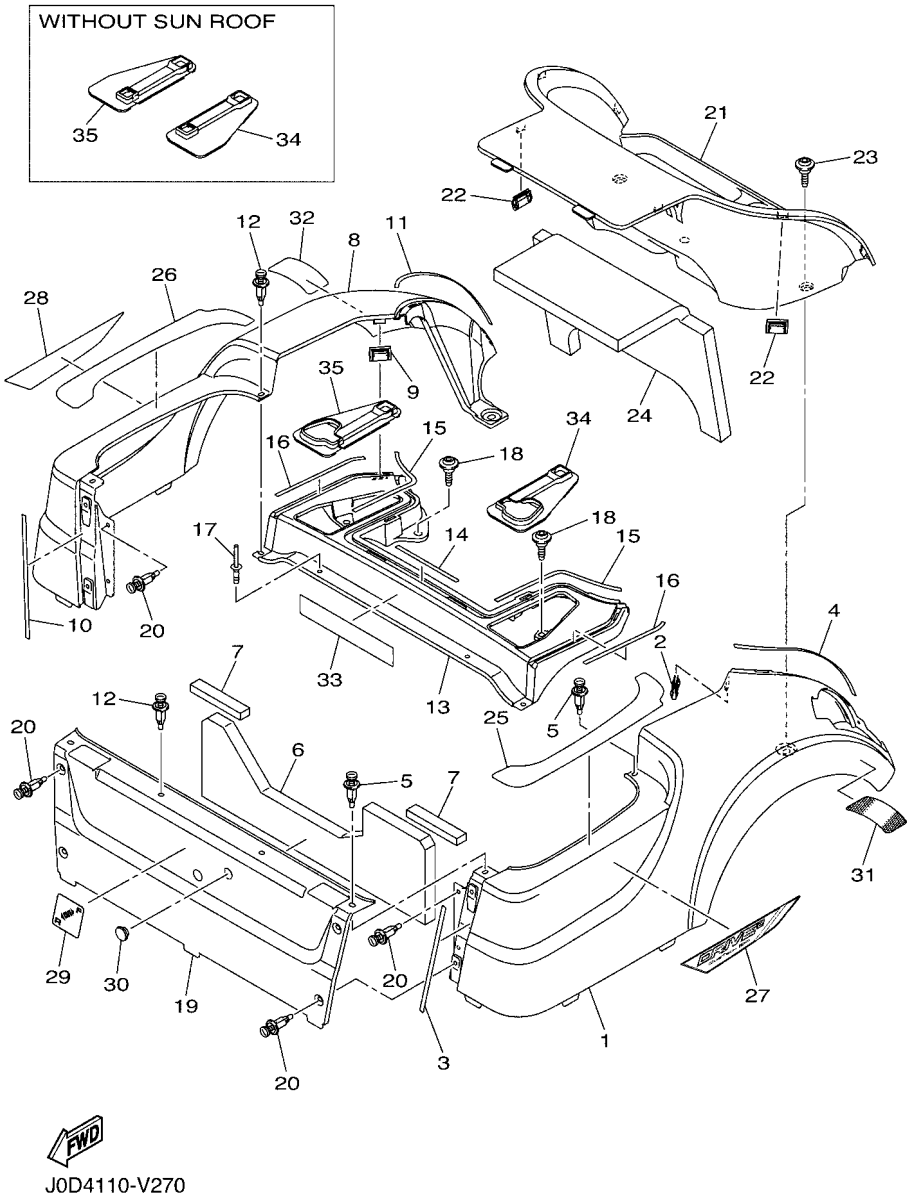

FIG. 27 BODY 2

REF. NO.	PART NO.	DESCRIPTION	J0D4					REMARKS
1	J0D–K8111–A0	PANEL, BODY SHELL	1					UR FOR BW1
	J0D–K8111–00	PANEL, BODY SHELL	1					UR FOR DNBME
	J0D–K8111–30	PANEL, BODY SHELL	1					UR FOR LNMP
	J0D–K8111–70	PANEL, BODY SHELL	1					UR FOR DRMV
	J0D–K8111–80	PANEL, BODY SHELL	1					UR FOR BMG
	J0D–K8111–90	PANEL, BODY SHELL	1					UR FOR VPBM6
	J0D–K8111–T0	PANEL, BODY SHELL	1					UR FOR MNYM2
	J0D–K8111–U0	PANEL, BODY SHELL	1					UR FOR MDNM7
	J0D–K8111–V0	PANEL, BODY SHELL	1					UR FOR MDOM1
2	J0B–F3447–00	CLIP	1					
3	J0B–K814E–00	SEAL, BODY SIDE 1	1					
4	J0B–K814F–00	SEAL, BODY SIDE 2	1					
5	90269–07805	RIVET	3					
6	J0B–K8251–00	PAD, SILENCER 1	1					
7	J0D–K825G–00	PAD, SILENCER 13	2					
8	J0D–K8112–A0	PANEL, BODY SHELL	1					UR FOR BW1
	J0D–K8112–00	PANEL, BODY SHELL	1					UR FOR DNBME
	J0D–K8112–30	PANEL, BODY SHELL	1					UR FOR LNMP
	J0D–K8112–70	PANEL, BODY SHELL	1					UR FOR DRMV
	J0D–K8112–80	PANEL, BODY SHELL	1					UR FOR BMG
	J0D–K8112–90	PANEL, BODY SHELL	1					UR FOR VPBM6
	J0D–K8112–T0	PANEL, BODY SHELL	1					UR FOR MNYM2
	J0D–K8112–U0	PANEL, BODY SHELL	1					UR FOR MDNM7
	J0D–K8112–V0	PANEL, BODY SHELL	1					UR FOR MDOM1
9	J0B–F3447–00	CLIP	1					
10	J0B–K814E–00	SEAL, BODY SIDE 1	1					
11	J0B–K814F–00	SEAL, BODY SIDE 2	1					

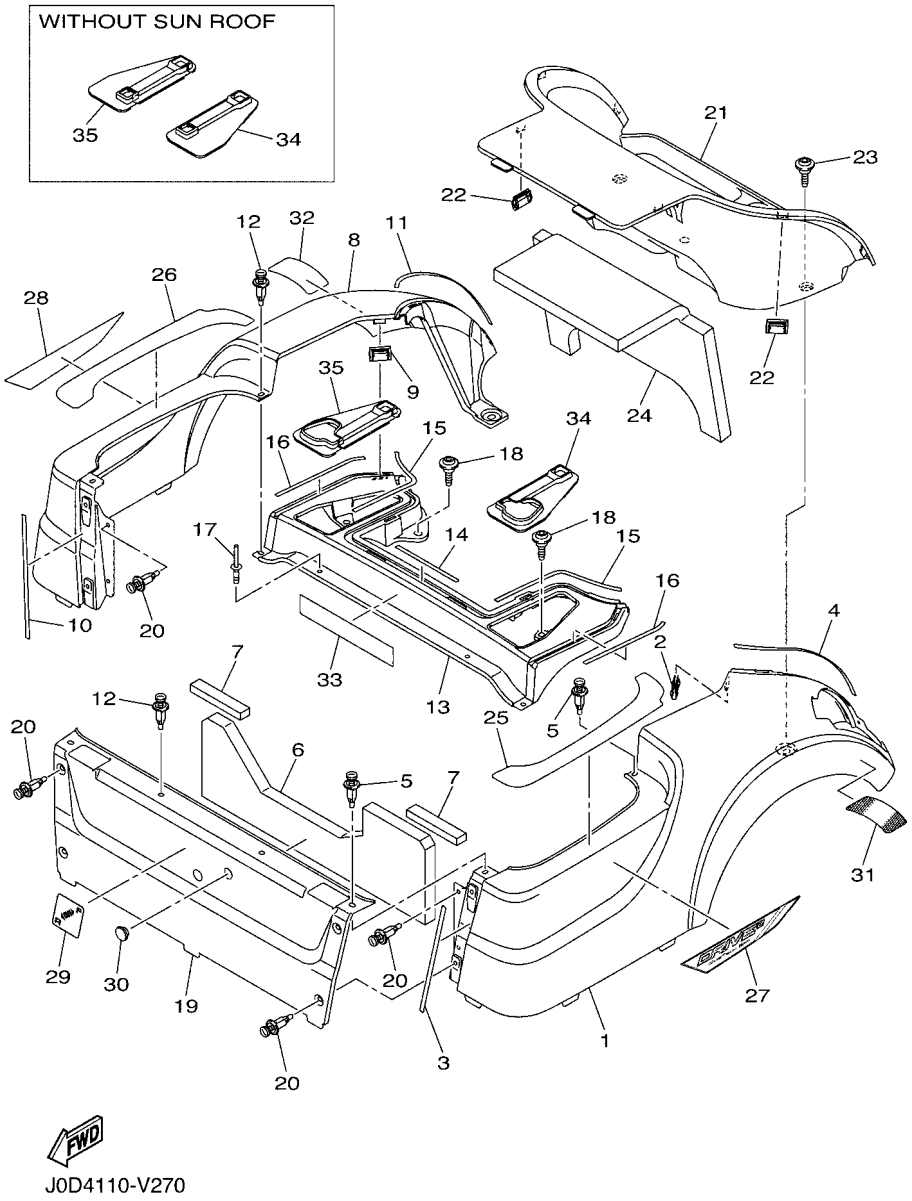

FIG. 27 BODY 2

REF. NO.	PART NO.	DESCRIPTION	J0D4					REMARKS
12	90269–07805	RIVET	3					
13	J0B–K819H–00	SHELL, REAR BODY	1					
14	J0B–K814R–00	SEAL, BODY SIDE 3	1					
15	J0B–K814T–00	SEAL, BODY SIDE 4	2					
16	J0B–K814U–00	SEAL, BODY SIDE	2					
17	JW7–K7329–00	RIVET	2					
18	J0B–F1738–00	BOLT	4					
19	J0B–K8141–A0	PANEL, INTERMEDIATE BODY	1					UR FOR BW1
	J0B–K8141–00	PANEL, INTERMEDIATE BODY	1					UR FOR DNBME
	J0B–K8141–30	PANEL, INTERMEDIATE BODY	1					UR FOR LNMP
	J0B–K8141–70	PANEL, INTERMEDIATE BODY	1					UR FOR DRMV
	J0B–K8141–80	PANEL, INTERMEDIATE BODY	1					UR FOR BMG
	J0B–K8141–90	PANEL, INTERMEDIATE BODY	1					UR FOR VPBM6
	J0B–K8141–T0	PANEL, INTERMEDIATE BODY	1					UR FOR MNYM2
	J0B–K8141–U0	PANEL, INTERMEDIATE BODY	1					UR FOR MDNM7
	J0B–K8141–V0	PANEL, INTERMEDIATE BODY	1					UR FOR MDOM1
20	90269–07805	RIVET	8					
21	J0B–K8237–02	COVER, REAR FLOOR	1					FOR 2 BAGS
22	J0B–F3447–00	CLIP	4					
23	J0B–F1738–00	BOLT	2					
24	J0B–K8255–02	PAD, SILENCER 5	1					
25	J0B–F2873–01	SEAL 1	1					
26	J0B–F2874–01	SEAL 2	1					
27	J0D–F1781–00	EMBLEM 1	1					UR FOR BMG
	J0D–F1781–10	EMBLEM 1	1					UR EXCEPT FOR BMG
28	J0D–F1782–00	EMBLEM 2	1					UR FOR BMG
	J0D–F1782–10	EMBLEM 2	1					UR EXCEPT FOR BMG

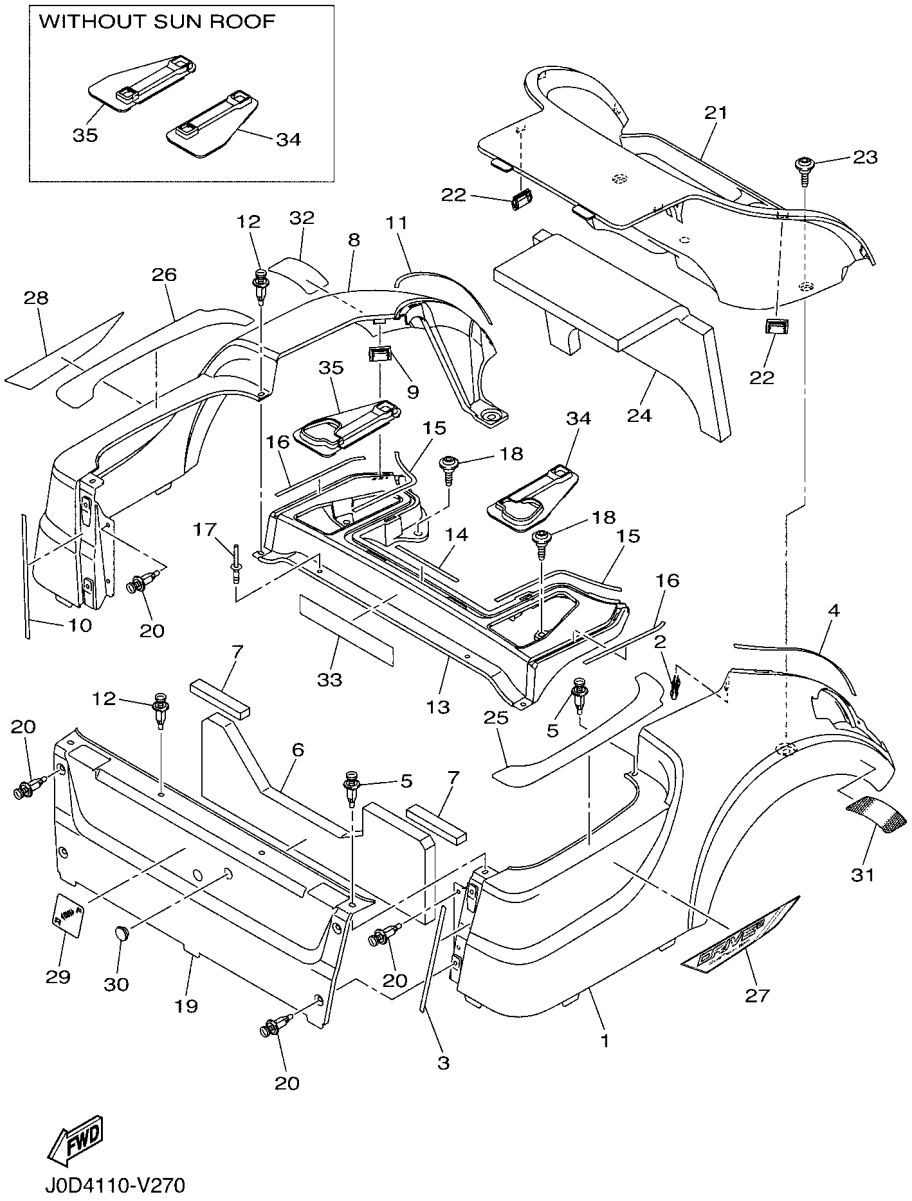

FIG. 27 BODY 2

REF. NO.	PART NO.	DESCRIPTION	J0D4					REMARKS
29	JW1–K7741–00	INDICATOR 1	1					
30	JR1–K8139–00	CAP, END	1					
31	J0D–H360G–00	REFLECTOR 3	1					
32	J0D–H360H–00	REFLECTOR 4	1					
33	JW1–K8297–02	PLATE, CAUTION 1	1					UR ENGLISH/FRENCH
	JW1–K8297–11	PLATE, CAUTION 1	1					UR GERMAN/SPANISH
34	J0B–K817H–10	TRIM, SIDE PANEL 1	1					WITH SUN ROOF
	J0B–K817H–00	TRIM, SIDE PANEL 1	1					WITHOUT SUN ROOF
35	J0B–K817J–10	TRIM, SIDE PANEL 2	1					WITH SUN ROOF
	J0B–K817J–00	TRIM, SIDE PANEL 2	1					WITHOUT SUN ROOF

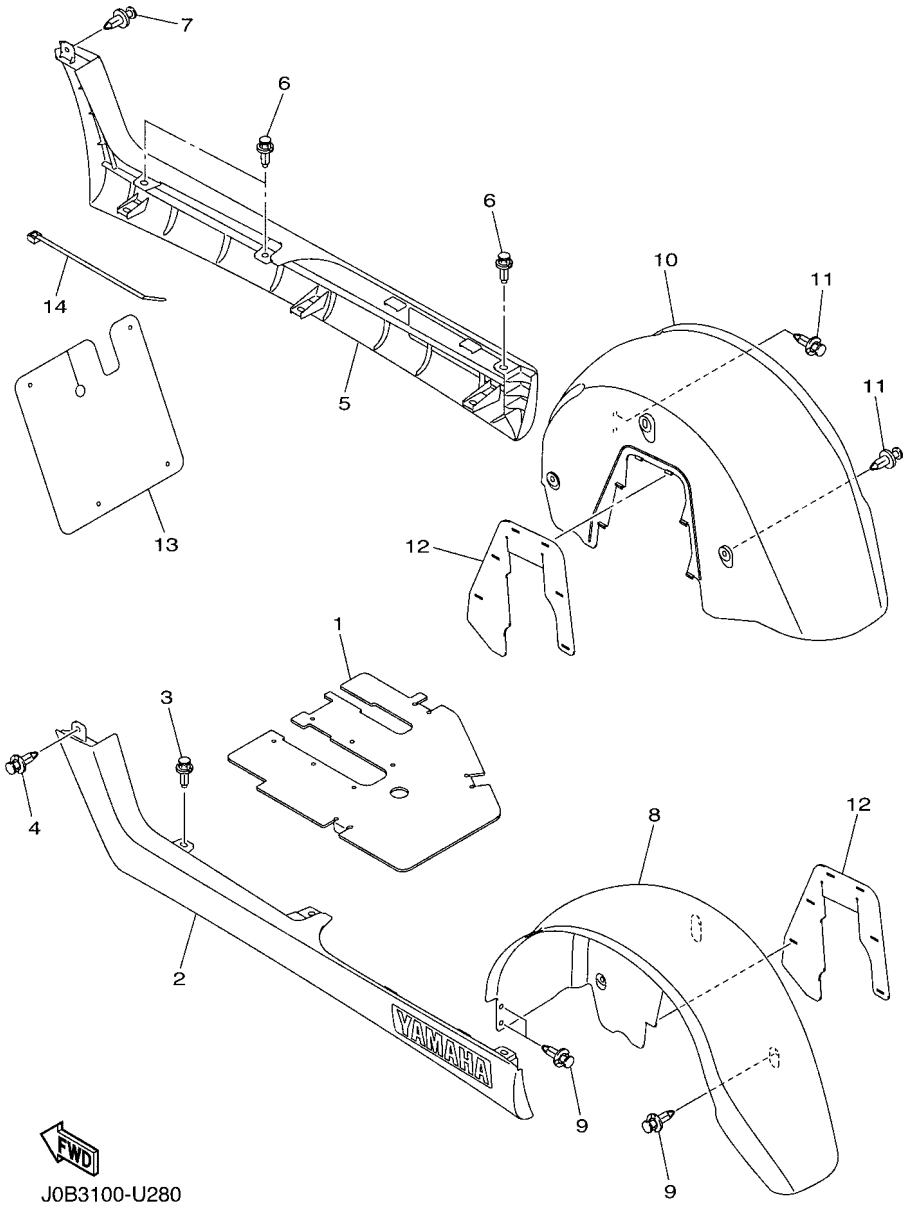

FIG. 28 BODY FITTING

REF. NO.	PART NO.	DESCRIPTION	J0D4					REMARKS
1	J0B–K8271–01	SERVICE LID, PEDAL	1					
2	J0B–K818A–00	PROTECTOR, SIDE PLATE	1					
3	90269–09003	RIVET	3					
4	90269–06804	RIVET	1					
5	J0B–K818B–00	PROTECTOR, SIDE PLATE 2	1					
6	90269–09003	RIVET	3					
7	90269–06804	RIVET	1					
8	J0B–K8191–00	PANEL, REAR FENDER 1	1					
9	90269–06804	RIVET	5					
10	J0B–K8192–00	PANEL, REAR FENDER 2	1					
11	90269–06804	RIVET	5					
12	J0B–K8197–01	FLAP, REAR FENDER	2					
13	J0B–K8187–00	FLAP, FRONT FENDER	1					
14	90464–76800	CLAMP	4					

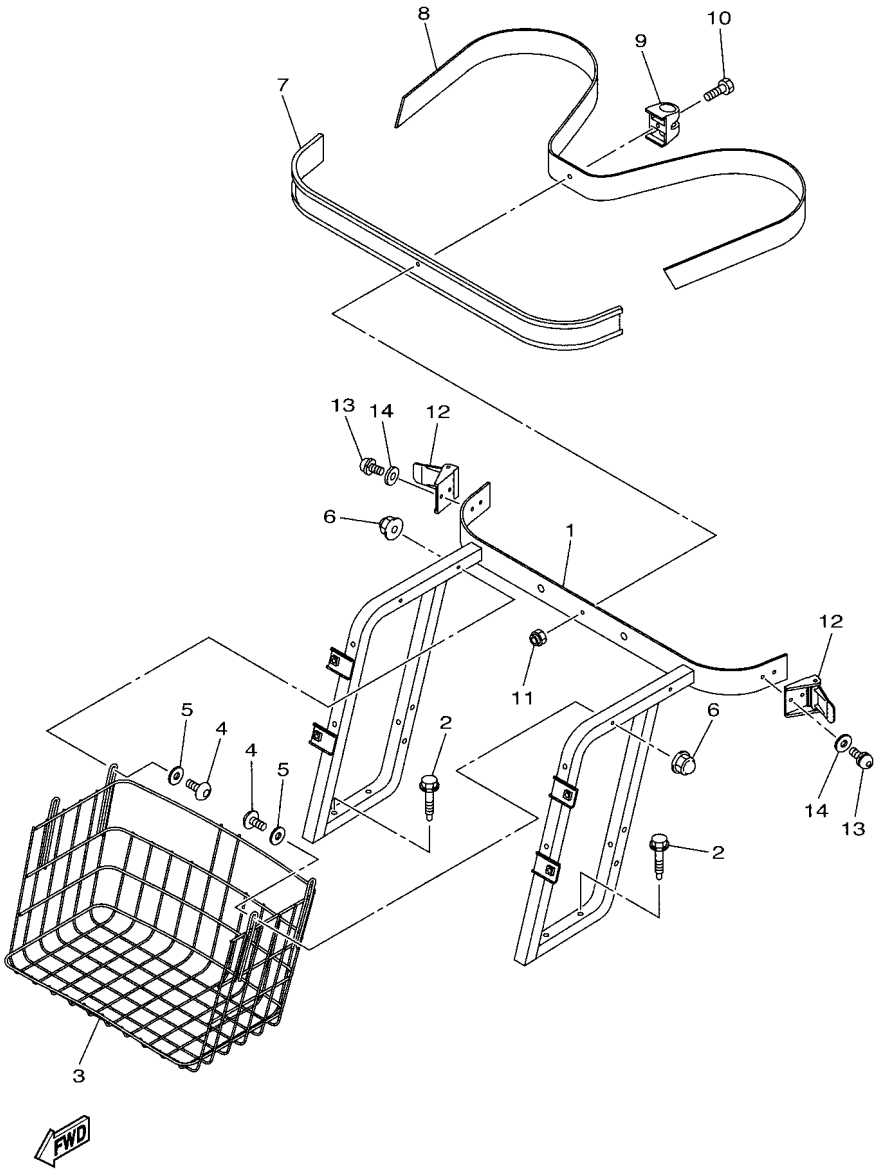

J0B1110-S280

FIG. 29 CARRIER

REF. NO.	PART NO.	DESCRIPTION	J0D4					REMARKS
1	J0B–K8423–00	SUPPORT, SEAT BACK	1					
2	90109–08178	BOLT	4					
3	JW1–K8340–00	LUGGAGE RACK ASSY., REAR	1					
4	92017–06040	BOLT, BUTTON HEAD	4					
5	J0B–K7389–00	WASHER	4					
6	90176–06008	NUT, CROWN	4					
7	JF2–K8356–00	PAD, BAG SUPPORT	1					
8	JN6–K8355–20	BAND	1					
9	JW1–K834G–00	HOLDER, RAKE SAND	1					
10	9708R–06020	BOLT	1					
11	90185–06836	NUT, SELF-LOCKING	1					
12	JN6–K8380–00	LOCK ASSY	2					
13	90159–06845	SCREW, WITH WASHER	4					
14	9299R–06200	WASHER	4					

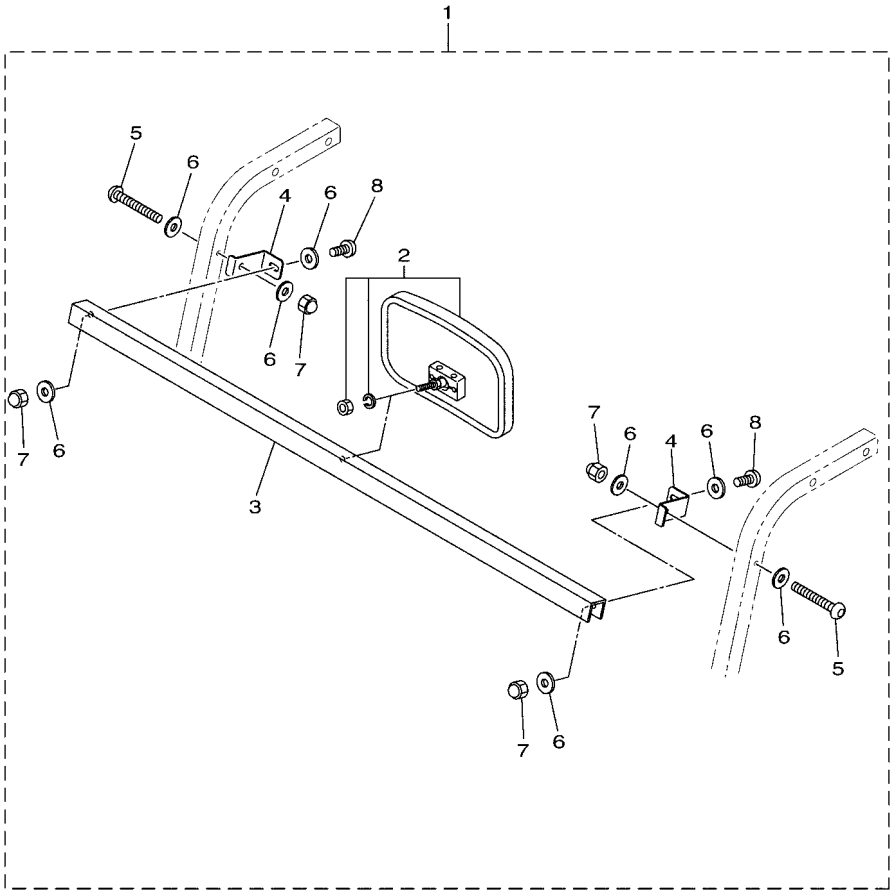

JC17100-P150

FIG. 30 REAR VIEW MIRROR

REF. NO.	PART NO.	DESCRIPTION	J0D4					REMARKS
1	JC0–F6280–11	REAR VIEW MIRROR ASSY (LEFT)	1					
2	JC0–F6291–11	.MIRROR	1					
3	JC0–F831W–20	.STAY, MIRROR 1	1					
4	JC0–F834N–20	.BRACKET, MIRROR 1	2					
5	JW1–K7387–20	.SCREW	2					
6	JC0–K7178–00	.WASHER 1	8					
7	JW1–K7217–10	.NUT, WIND SHIELD	4					
8	JC0–K7212–10	.BOLT, WIND SHIELD	2					

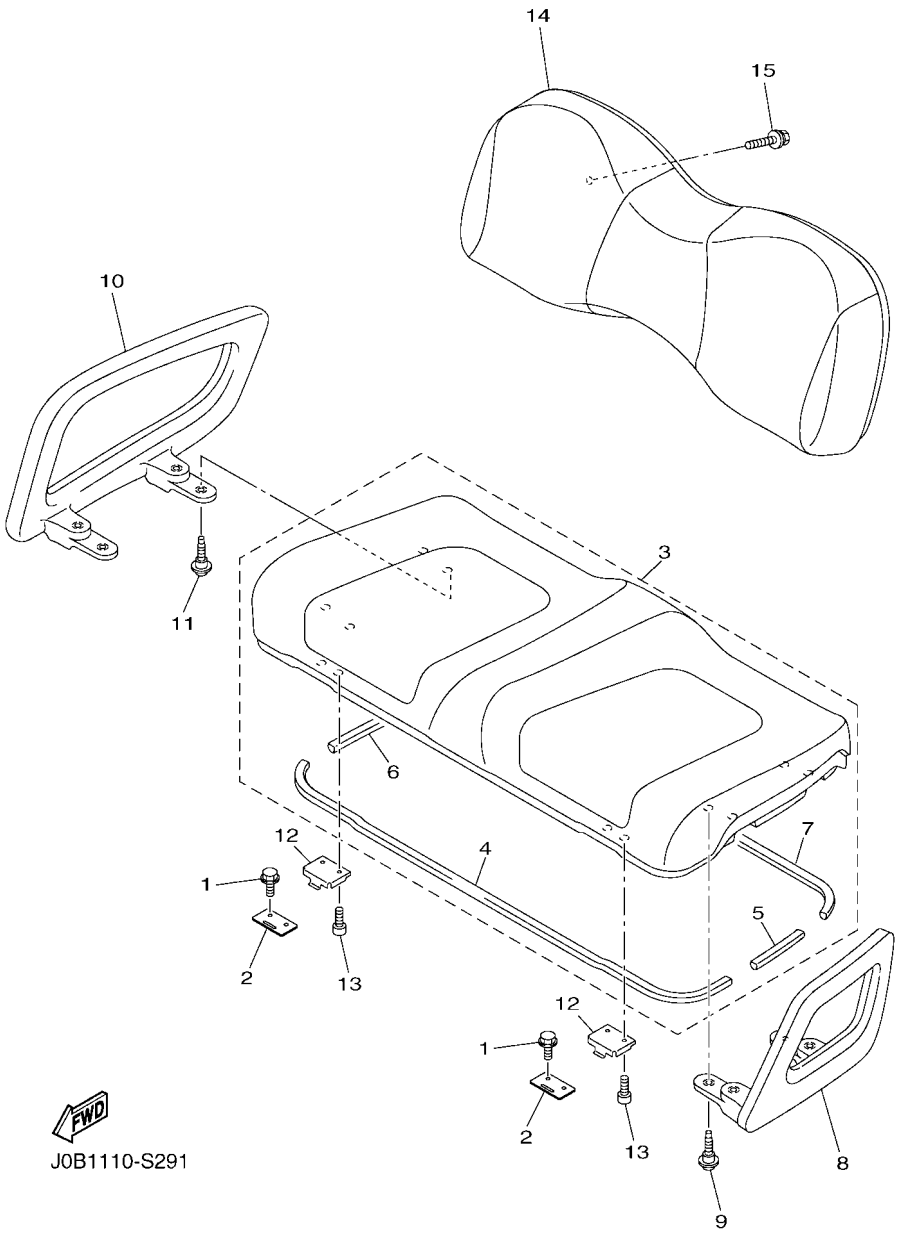

FIG. 31 SEAT

REF. NO.	PART NO.	DESCRIPTION	J0D4					REMARKS
1	JW9–H1674–00	BOLT	4					
2	J0B–K8427–00	HINGE, SEAT 2	2					
3	J0B–K8401–10	SEAT SUB-ASSY,CUSHION	1					
4	J0B–K8245–00	.SEAL 1	1					
5	J0B–K8246–00	.SEAL 2	1					
6	J0B–K8247–00	.SEAL 3	1					
7	J0B–K8248–00	.SEAL 4	1					
8	J0B–K8361–00	ARM REST 1	1					
9	J0B–F1738–00	BOLT	4					
10	J0B–K8362–00	ARM REST 2	1					
11	J0B–F1738–00	BOLT	4					
12	J0B–K8426–10	HINGE, SEAT 1	2					
13	90110–06125	BOLT, HEXAGON SOCKET HEAD	4					
14	JW1–K8402–10	SEAT SUB ASSY, BACK	1					
15	90119–06808	BOLT, WITH WASHER	4					

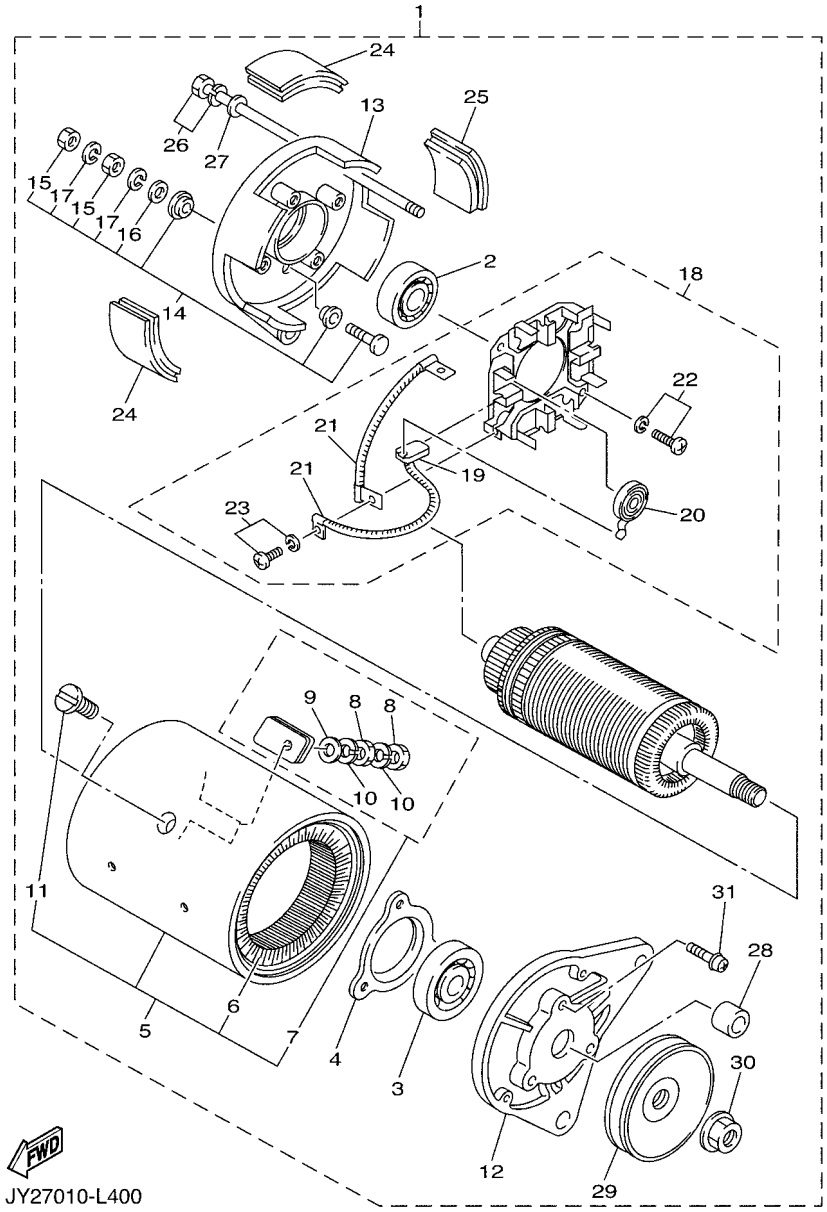

FIG. 32 STARTING MOTOR

REF. NO.	PART NO.	DESCRIPTION	J0D4					REMARKS
1	JN6–H1100–04	STARTER GENERATOR ASSY	1					
2	J10–H1157–10	.BEARING 1	1					
3	J10–H1158–10	.BEARING 2	1					
4	J10–81159–10	.HOLDER, BEARING	1					
5	JN6–H1110–10	.STATOR ASSY	1					
6	JN6–H1160–10	..FIELD COIL ASSY	1					
7	J10–81148–10	..SCREW SET 4	2					
8	9530N–06600	...NUT,HEX	2					
9	9290N–06600	...WASHER	1					
10	92907–06100	...WASHER, SPRING	2					
11	J10–81146–10	..SCREW 2	4					
12	JN6–H1165–00	.BRACKET, STARTER GENERATOR 1	1					
13	J10–H1166–10	.BRACKET, STARTER GENERATOR 2	1					
14	J10–81147–10	.SCREW SET 3	2					
15	9530N–06600	..NUT,HEX	2					
16	9290N–06600	..WASHER	1					
17	92907–06100	..WASHER, SPRING	2					
18	JN6–H1119–00	.BRUSH HOLDER ASSY	1					
19	JF2–H1111–00	..BRUSH	4					
20	JN6–H1113–00	..SPRING, BRUSH	4					
21	J10–81115–10	..WIRE, LEAD	2					
22	9850N–05016	..SCREW, PAN HEAD	2					
23	9850N–04010	..SCREW, PAN HEAD	4					
24	J10–81129–10	.COVER, BRUSH	3					
25	J10–81139–10	.COVER, BRUSH 2	1					
26	J10–H1145–10	.SCREW 1	2					
27	9290N–06600	.WASHER	2					

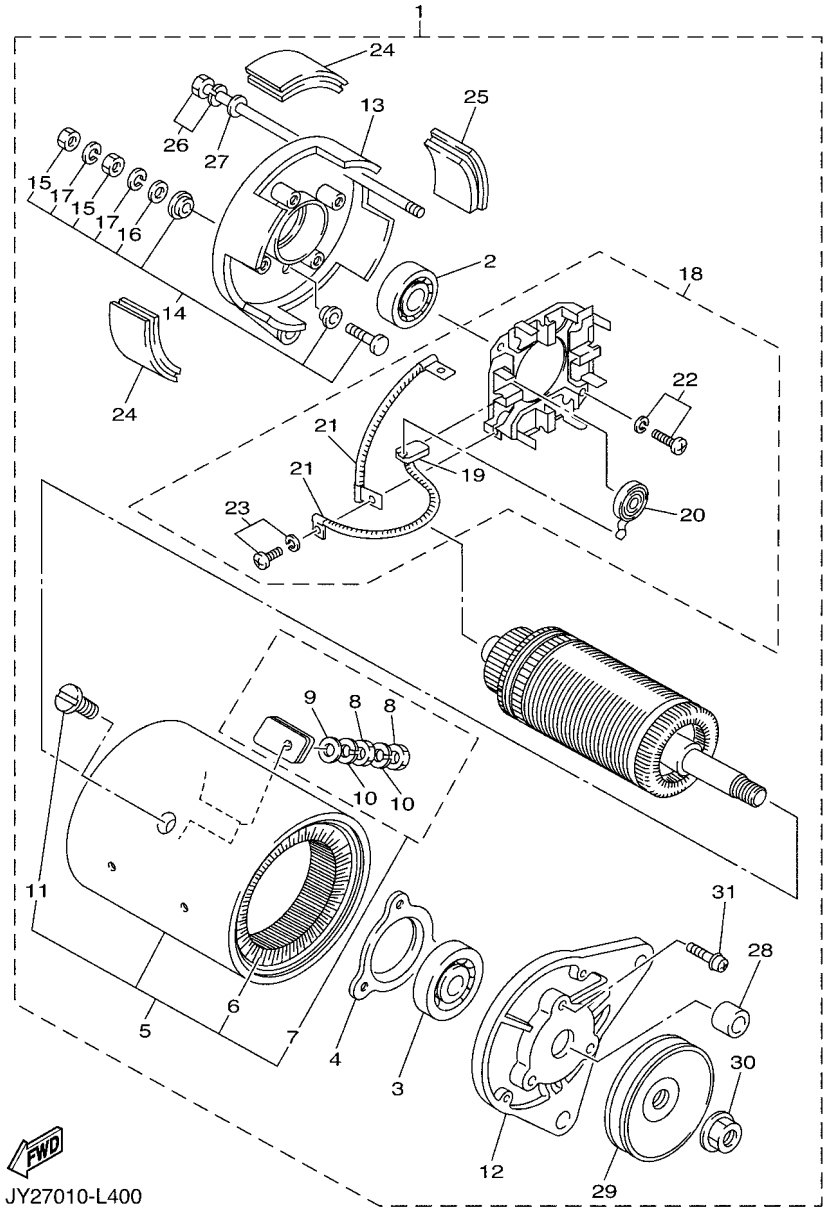

FIG. 32 STARTING MOTOR

REF. NO.	PART NO.	DESCRIPTION	J0D4					REMARKS
28	JN3–H1661–00	.SPACER	1					
29	JN6–H1161–00	.PULLEY	1					
30	90179–16889	.NUT	1					
31	9850N–05018	.SCREW, PAN HEAD	3					

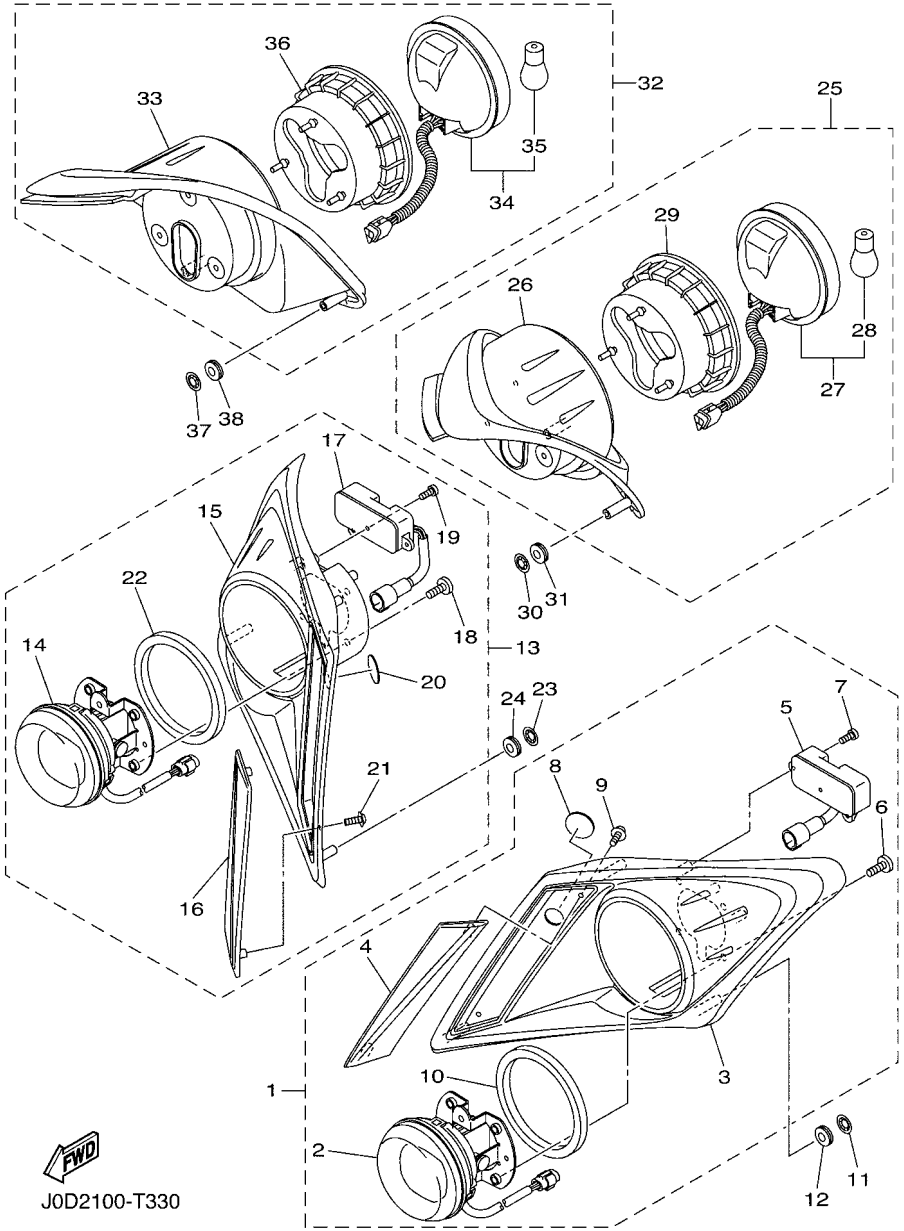

FIG. 33 HEAD & TAIL LIGHT

REF. NO.	PART NO.	DESCRIPTION	J0D4					REMARKS
1	J0D–H4110–01	HEADLIGHT UNIT ASSY	1					
2	J0D–H4300–00	.HEADLIGHT ASSY	1					
3	J0D–H411T–00	.HOLDER, 1	1					
4	J0D–H4385–00	.CAP,1	1					
5	J0D–H5490–01	.LIGHT CONTROL UNIT	1					
6	J0D–H4526–00	.SCREW	4					
7	J0D–H4726–00	.SCREW	3					
8	J0D–H3547–00	.COVER, SOCKET	1					
9	J0D–H4524–00	.SCREW, LENS FITTING	2					
10	J0D–H4195–00	.RING, RETAINING	1					
11	90183–08800	NUT, SPRING	3					
12	90480–13016	GROMMET	3					
13	J0D–H4170–01	HEAD LIGHT UNIT ASSY	1					
14	J0D–H4300–00	.HEADLIGHT ASSY	1					
15	J0D–H411U–00	.HOLDER, 2	1					
16	J0D–H4386–00	.CAP,2	1					
17	J0D–H5490–01	.LIGHT CONTROL UNIT	1					
18	J0D–H4526–00	.SCREW	4					
19	J0D–H4726–00	.SCREW	3					
20	J0D–H3547–00	.COVER, SOCKET	1					
21	J0D–H4524–00	.SCREW, LENS FITTING	2					
22	J0D–H4195–00	.RING, RETAINING	1					
23	90183–08800	NUT, SPRING	3					
24	90480–13016	GROMMET	3					
25	J0D–H4710–01	TAILLIGHT UNIT ASSY	1					
26	J0D–H431U–00	.HOLDER	1					
27	J0D–H4700–01	.TAILLIGHT ASSY	1					

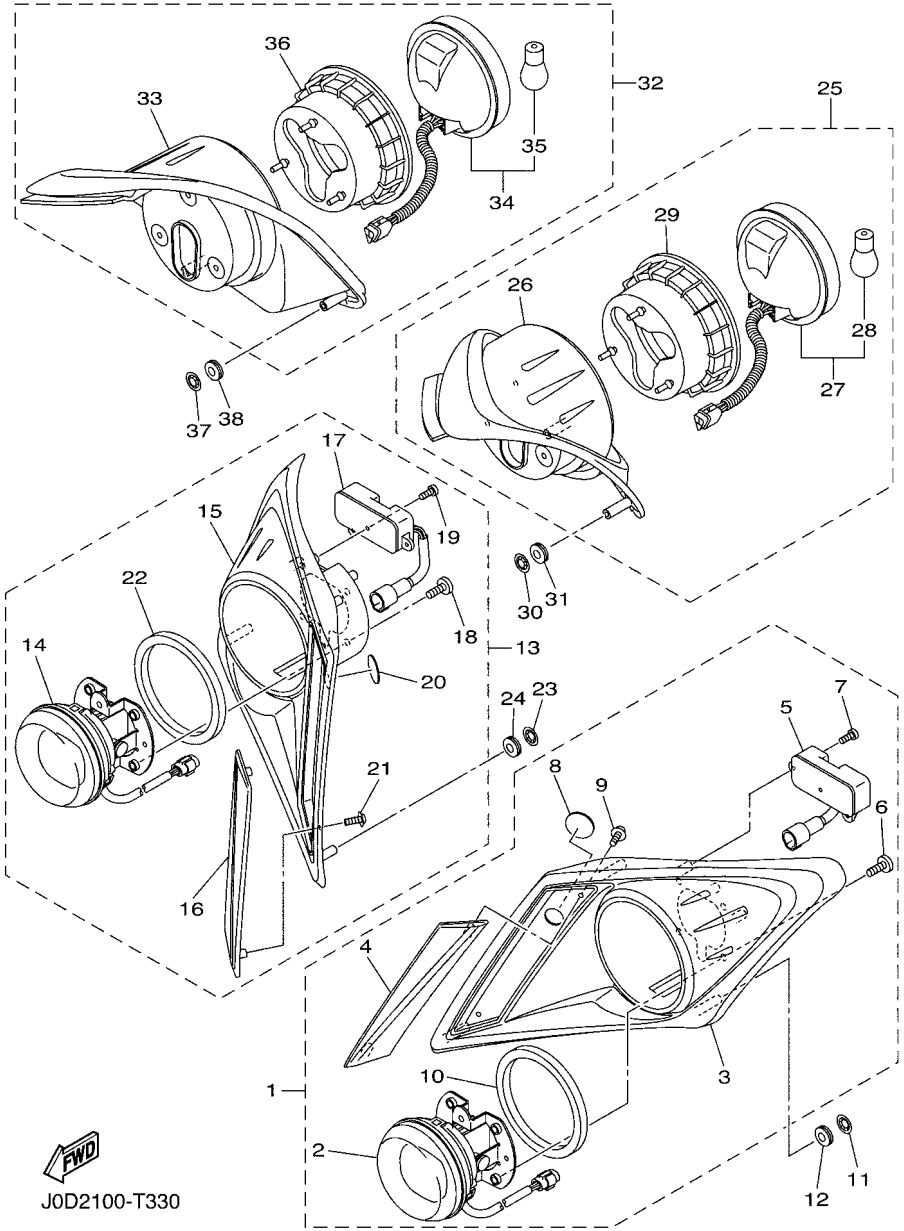

FIG. 33 HEAD & TAIL LIGHT

REF. NO.	PART NO.	DESCRIPTION	J0D4					REMARKS
28	JC0–H4514–01	..BULB	1					
29	J0D–H4718–00	.GROMMET	1					
30	90183–08800	NUT, SPRING	2					
31	90480–13016	GROMMET	2					
32	J0D–H4730–01	TAILLIGHT UNIT ASSY	1					
33	J0D–H4387–00	.HOLDER	1					
34	J0D–H4700–01	.TAILLIGHT ASSY	1					
35	JC0–H4514–01	..BULB	1					
36	J0D–H4718–00	.GROMMET	1					
37	90183–08800	NUT, SPRING	2					
38	90480–13016	GROMMET	2					

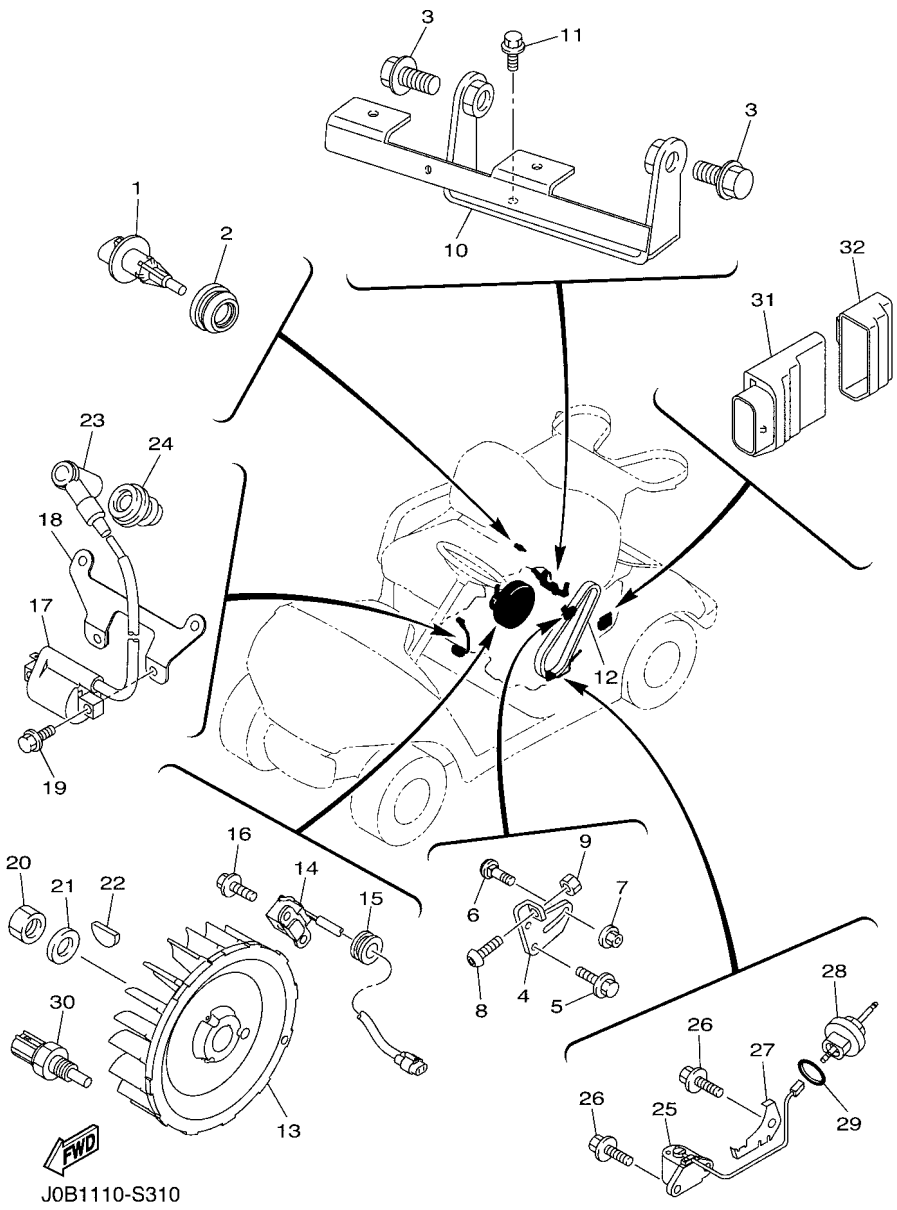

FIG. 34 ELECTRICAL 1

REF. NO.	PART NO.	DESCRIPTION	J0D4					REMARKS
1	5CA–85886–00	SENSOR, AIR TEMPRATURE	1					
2	5CA–14435–00	GROMMET	1					
3	95812–12030	BOLT, FLANGE	2					
4	JW1–H1170–11	TENSIONER ASSY	1					
5	95822–08020	BOLT, FLANGE	2					
6	90109–08827	BOLT	1					
7	95702–08500	NUT, FLANGE	1					
8	92012–06030	BOLT, BUTTON HEAD	1					
9	95302–06600	NUT, HEXAGON	1					
10	JN6–H1171–11	BRACKET, STARTER GENERATOR	1					
11	95822–08020	BOLT, FLANGE	2					
12	JW1–H1173–02	BELT	1					
13	JC0–85650–10	ROTOR ASSY	1					
14	JB2–81670–00	PICK-UP ASSY	1					
15	90480–20564	GROMMET	1					
16	95822–06016	BOLT, FLANGE	2					
17	1S4–82310–01	IGNITION COIL ASSY	1					
18	JC0–82316–00	BRACKET, IGNITION COIL	1					
19	95822–06016	BOLT, FLANGE	2					
20	95302–18600	NUT, HEXAGON	1					
21	90201–18620	WASHER, PLATE	1					
22	90280–04052	KEY, WOODRUFF	1					
23	JN6–82370–00	PLUG CAP ASSY	1					
24	JE8–82372–00	SEAL, PLUG CAP	1					
25	JT0–85720–01	OIL LEVEL GAUGE ASSY	1					
26	95822–06012	BOLT, FLANGE	3					
27	JT0–85724–00	CLAMP	1					

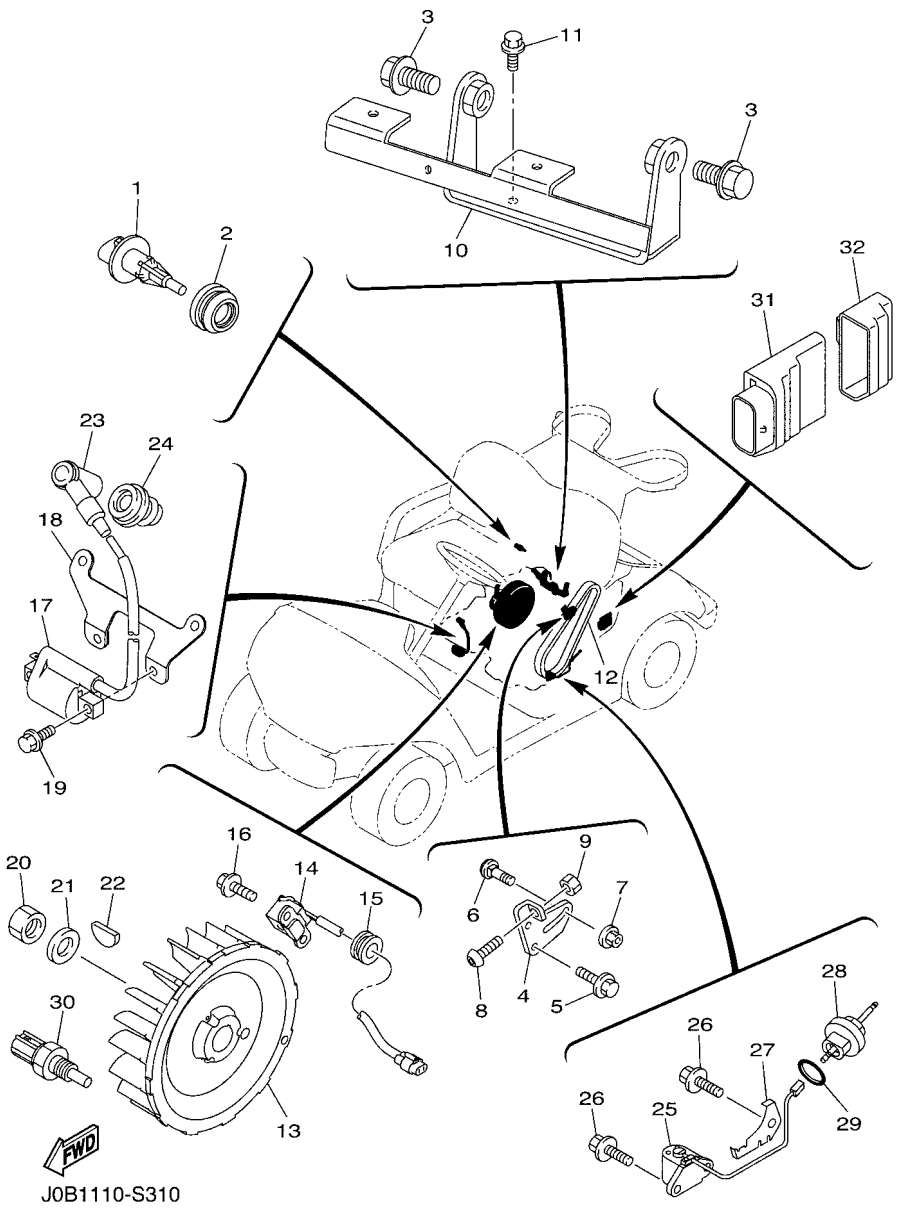

FIG. 34 ELECTRICAL 1

REF. NO.	PART NO.	DESCRIPTION	J0D4					REMARKS
28	JT0–15362–00	PLUG, OIL LEVEL	1					
29	93210–15414	O-RING	1					
30	4P9–83591–00	THERMO UNIT	1					
31	J0B–H591A–01	ENGINE CONTROL UNIT ASSY	1					
32	J0B–H5546–00	BAND	1					

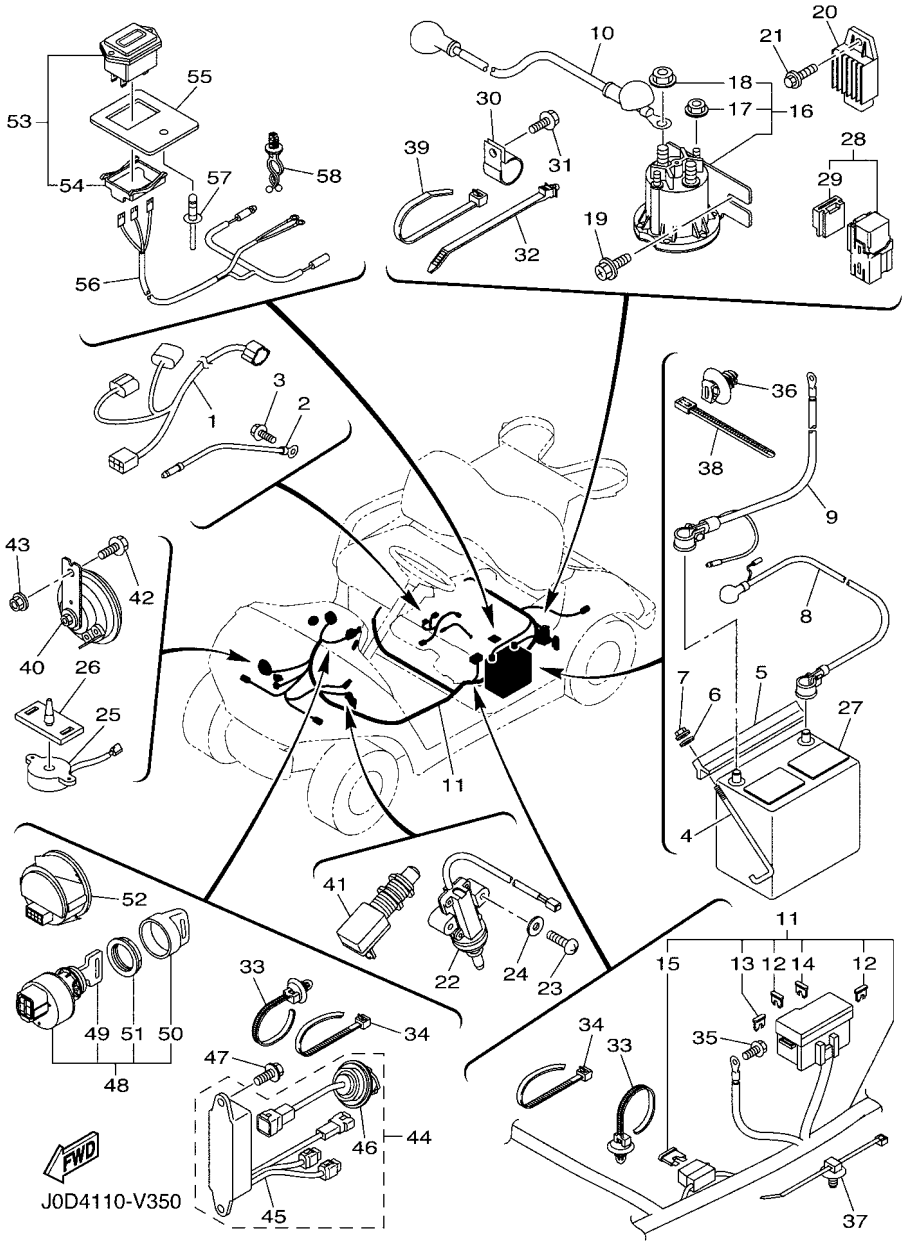

FIG. 35 ELECTRICAL 2

REF. NO.	PART NO.	DESCRIPTION	J0D4					REMARKS
1	J0B–82149–01	WIRE, LEAD 3	1					
2	JC0–82519–00	WIRE, EARTH LEAD	1					
3	95822–06012	BOLT, FLANGE	1					
4	JW1–H2133–00	SCREW, FITTING	2					
5	J55–H2136–00	PLATE, BATTERY FITTING	1					
6	92902–06200	WASHER	2					
7	95702–06500	NUT, FLANGE	2					
8	J0B–H2115–00	WIRE, PLUS LEAD	1					
9	J0B–H2116–01	WIRE, MINUS LEAD	1					
10	J0B–H2117–00	WIRE, LEAD	1					
11	J0D–H2590–01	WIRE HARNESS ASSY	1					
12	JW6–H554E–00	.FUSE (10A)	2					
13	JW6–H554E–20	.FUSE (25A)	1					
14	JW6–H554E–10	.FUSE (15A)	1					
15	J0D–H2151–00	.FUSE (5A)	1					
16	JW1–H1950–00	RELAY ASSY	1					
17	90179–05807	.NUT	2					
18	90179–08824	.NUT	2					
19	90105–06831	BOLT, FLANGE	2					
20	JF2–81910–11	VOLTAGE REGULATOR ASSY	1					
21	90105–06870	BOLT, FLANGE	1					
22	JF7–82817–22	SWITCH	1					
23	98502–05025	SCREW, PAN HEAD	2					
24	92902–05600	WASHER, PLATE	2					
25	JR1–H3383–02	BUZZER	1					
26	JN6–H3386–01	STAY, BUZZER	1					
27	*	BATTERY ASSY (GC-24, 12V)	1					LM

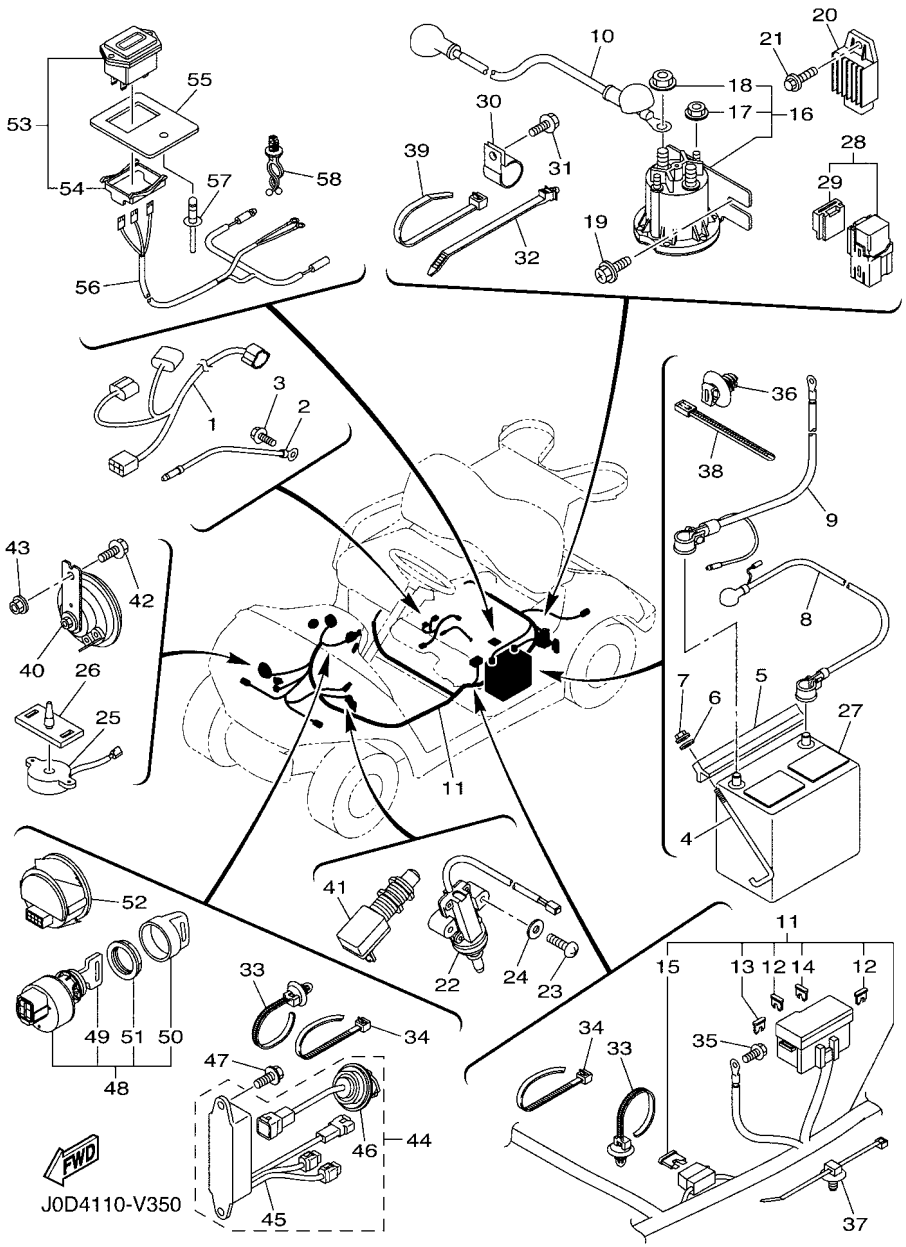

FIG. 35 ELECTRICAL 2

REF. NO.	PART NO.	DESCRIPTION	J0D4					REMARKS
28	1TP–81950–00	RELAY ASSY (1TP-00)	1					
29	5EA–81952–00	.HOLDER, RELAY	1					
30	90461–14108	CLAMP	1					
31	90119–06868	BOLT, WITH WASHER	1					
32	90464–09823	CLAMP	1					
33	90464–20005	CLAMP	3					
34	90464–48800	CLAMP	3					
35	90105–08867	BOLT, FLANGE	1					
36	5UG–F2465–10	HOLDER	1					
37	1NS–F1338–00	CLAMP	3					
38	90464–40825	CLAMP	2					
39	90464–51800	CLAMP	2					213X7.60
40	4LR–83371–11	HORN	1					
41	JR6–H270X–00	SWITCH	1					
42	95822–06016	BOLT, FLANGE	1					
43	95702–06500	NUT, FLANGE	1					
44	J0D–H21E0–02	USB ASSY	1					
45	J0D–H21E1–01	.PLUG, USB	1					
46	J0D–H21E2–01	.CABLE, USB	2					
47	90119–06868	BOLT, WITH WASHER	2					
48	JW6–H2510–00	MAIN SWITCH ASSY	1					
49	JU6–H2511–10	.KEY, MAIN SWITCH	2					
50	5UG–H2579–00	.CAP, KEY	1					
51	JU6–H2569–00	.NUT, MAIN SWITCH	1					
52	JC0–H351C–10	GAUGE 1	1					
53	JN6–H351C–10	GAUGE 1	1					AP
54	JW1–H1128–00	.CLAMP	1					AP

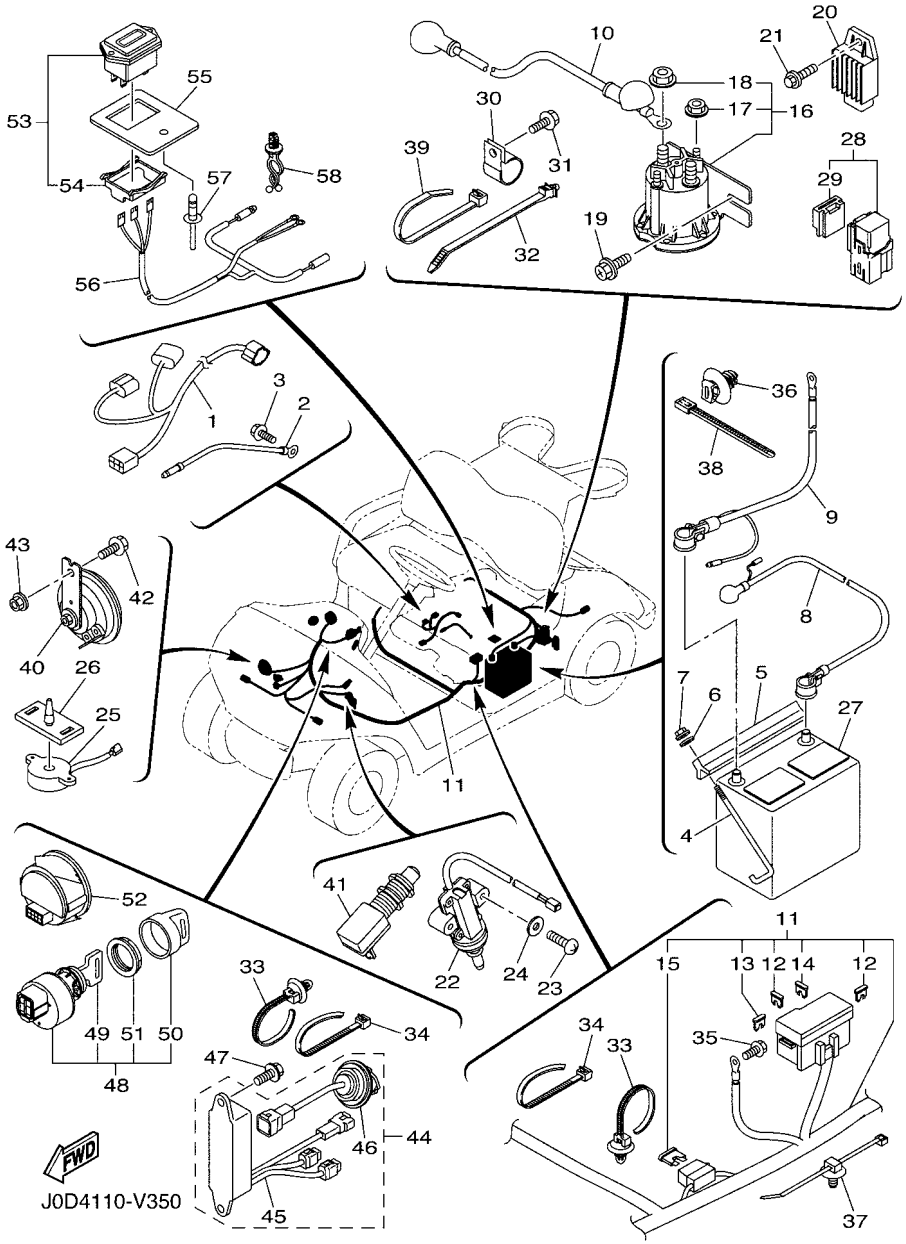

FIG. 35 ELECTRICAL 2

REF. NO.	PART NO.	DESCRIPTION	J0D4					REMARKS
55	J0B–F4881–00	BRKT., METER	1					AP
56	JW1–H2386–10	EXTENSION, WIRE HARNESS	1					AP
57	JW7–K7329–00	RIVET	1					AP
58	90464–12836	CLAMP	1					AP

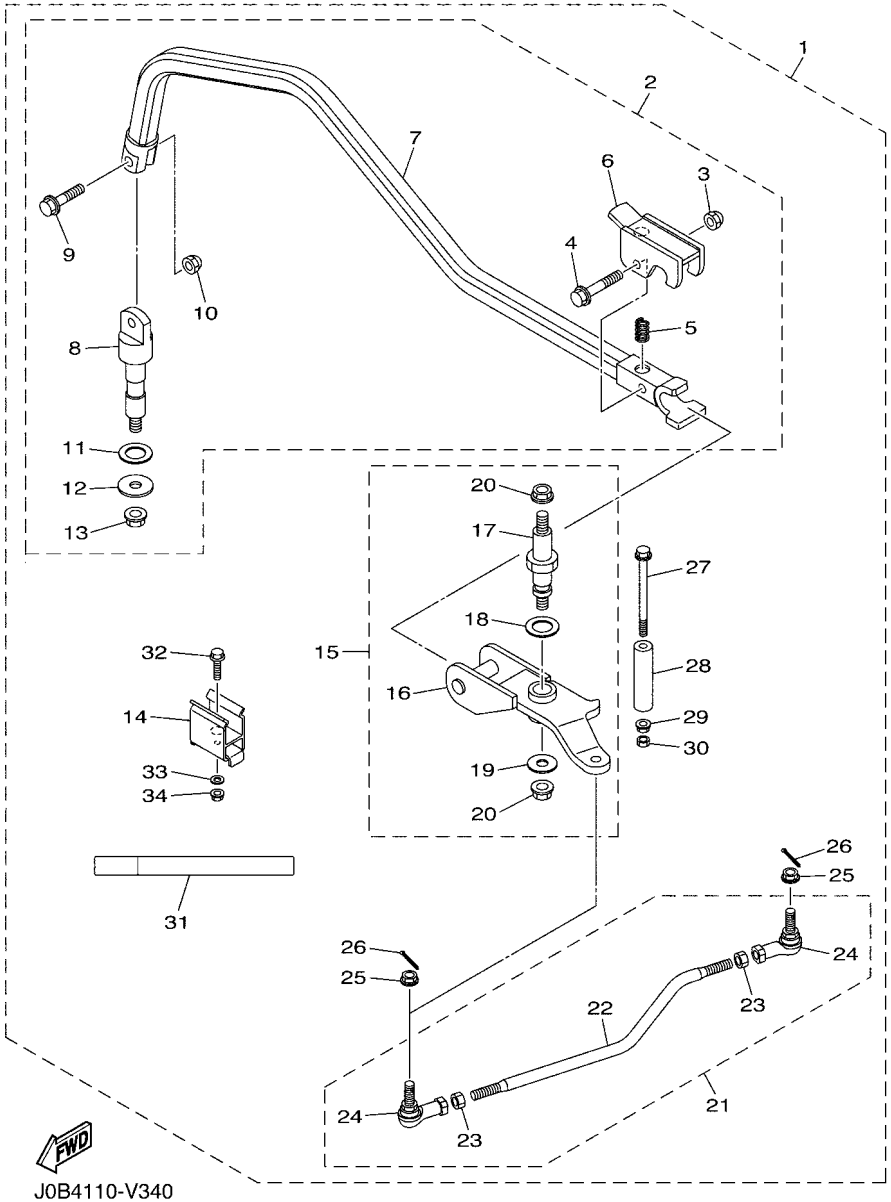

J0B4110-V340

FIG. 36 ALTERNATE FOR CHASSIS

REF. NO.	PART NO.	DESCRIPTION	J0D4					REMARKS
1	J0B–F722B–A3	BAR, TOW	1					AP
2	J0B–F389J–A0	.DRAW BAR ASSY	1					
3	J0B–F4681–00	..NUT, CAP	1					
4	95802–10050	..BOLT, FLANGE	1					
5	J0B–F178D–A0	..SPRING, HOOK	1					
6	J0B–F381J–A0	..BAR, HANDLE	1					
7	J0B–F7224–00	..BAR, PEDAL LINK	1					
8	J0B–F2141–00	..SHAFT, PIVOT	1					
9	95802–10035	..BOLT, FLANGE	1					
10	J0B–F4681–00	..NUT, CAP	1					
11	J0B–F3418–00	..WASHER, SPECIAL	1					
12	90201–128S4	..WASHER, PLATE	1					
13	95602–12200	..NUT, SELF-LOCKING	1					
14	J0B–F5522–00	.HOLDER	1					
15	J0B–F389K–A1	.ARM PIVOT ASSY	1					
16	J0B–F389G–00	..ARM, PIVOT	1					
17	J0B–F3849–A0	..SHAFT 1	1					
18	90201–208S8	..WASHER, PLATE	1					
19	J0B–F3392–00	..WASHER, SPECIAL	1					
20	95602–12200	..NUT, SELF-LOCKING	2					
21	J0B–F3880–A0	.TIE ROD ASSEMBLY 3	1					
22	J0B–F383A–00	..TIE ROD ASSEMBLY 3	1					
23	95302–10600	..NUT, HEXAGON	2					
24	J0B–F3841–A0	..JOINT, UNIVERSAL 1	2					
25	95602–10200	.NUT, S/L FLANGE	2					
26	91402–25020	.PIN, COTTER	2					
27	90105–088A9	.BOLT, FLANGE	1					

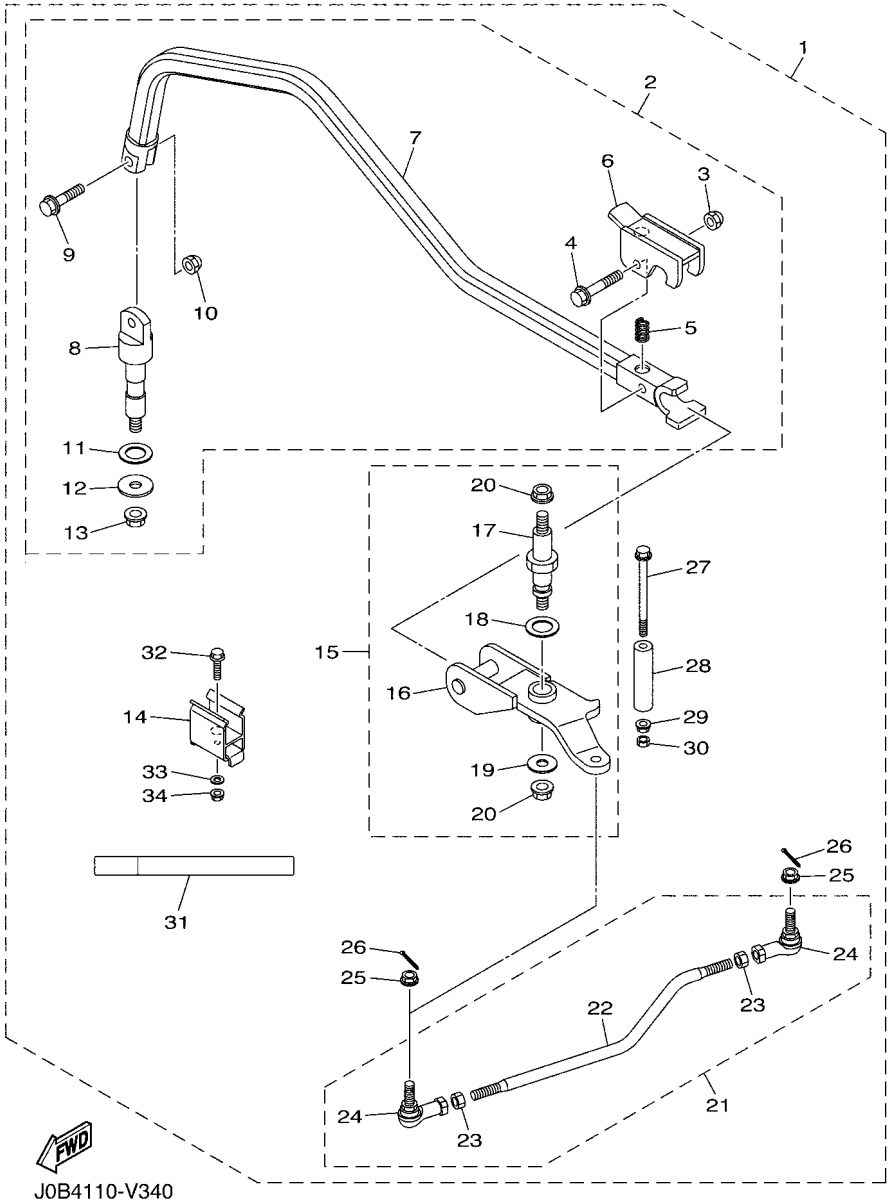

J0B4110-V340

FIG. 36 ALTERNATE FOR CHASSIS

REF. NO.	PART NO.	DESCRIPTION	J0D4					REMARKS
28	J0B–F3432–00	.STOPPER, STEERING 1	1					
29	95602–08200	.NUT, U FLANGE	1					
30	95602–08100	.NUT, U	1					
31	J0B–K7761–A0	.LABEL, WARNING 1	1					
32	95812–06025	.BOLT, FLANGE	1					
33	90201–06102	.WASHER, PLATE	1					
34	95602–06200	.NUT, SELF-LOCKING	1					

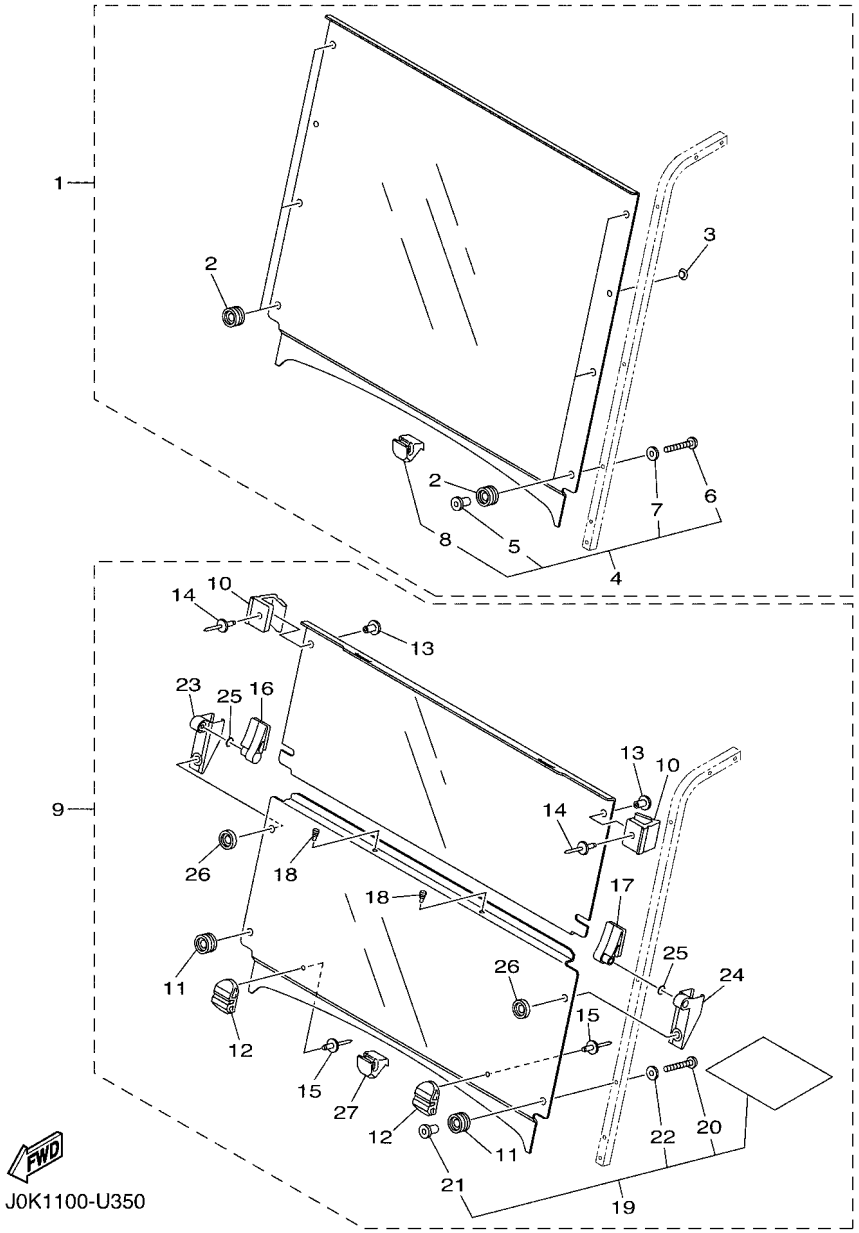

FIG. 37 ALTERNATE FOR WINDSHIELD

REF. NO.	PART NO.	DESCRIPTION	J0D4					REMARKS
1	J0B–K7200–01	WINDSHIELD ASSY	1					UR AP CLEAR
	J0B–K7200–11	WINDSHIELD ASSY	1					UR AP SMOKE
2	J0B–K7237–00	.GROMMET	6					
3	J0B–K7238–00	.DAMPER	2					
4	J0B–K7240–01	.WIND SHIELD HARDWARE KIT 1	1					
5	J0B–K7217–00	..NUT, WIND SHIELD	6					
6	J0B–K7248–00	..SCREW 1	6					
7	J0B–K7218–00	..WASHER 1	6					
8	J0B–K838A–20	..RETAINER 1	1					
9	J0B–K7200–24	WINDSHIELD ASSY	1					UR AP CLEAR
	J0B–K7200–34	WINDSHIELD ASSY	1					UR AP SMOKE
10	J0B–K7173–21	.LEVER, LATCH 1	2					
11	J0B–K7237–00	.GROMMET	2					
12	J0B–K7257–20	.GROMMET, W/S 3	2					
13	J0G–K7155–C0	.RIVET 1	2					
14	J0G–K7156–C0	.RIVET 2	2					
15	J0B–K7155–20	.RIVET 1	2					
16	J0B–K7145–20	.HINGE 1	1					
17	J0B–K7146–20	.HINGE 2	1					
18	J0B–K7529–20	.SPACER, BUMPER	2					
19	J0B–K7240–20	.WIND SHIELD HARDWARE KIT 1	1					
20	J0B–K7248–00	..SCREW 1	4					
21	J0B–K7217–00	..NUT, WIND SHIELD	4					
22	J0B–K7218–00	..WASHER 1	4					
23	J0B–K7147–20	.HINGE 3	1					
24	J0B–K7148–20	.HINGE 4	1					
25	J0B–F3147–20	.O-RING	2					

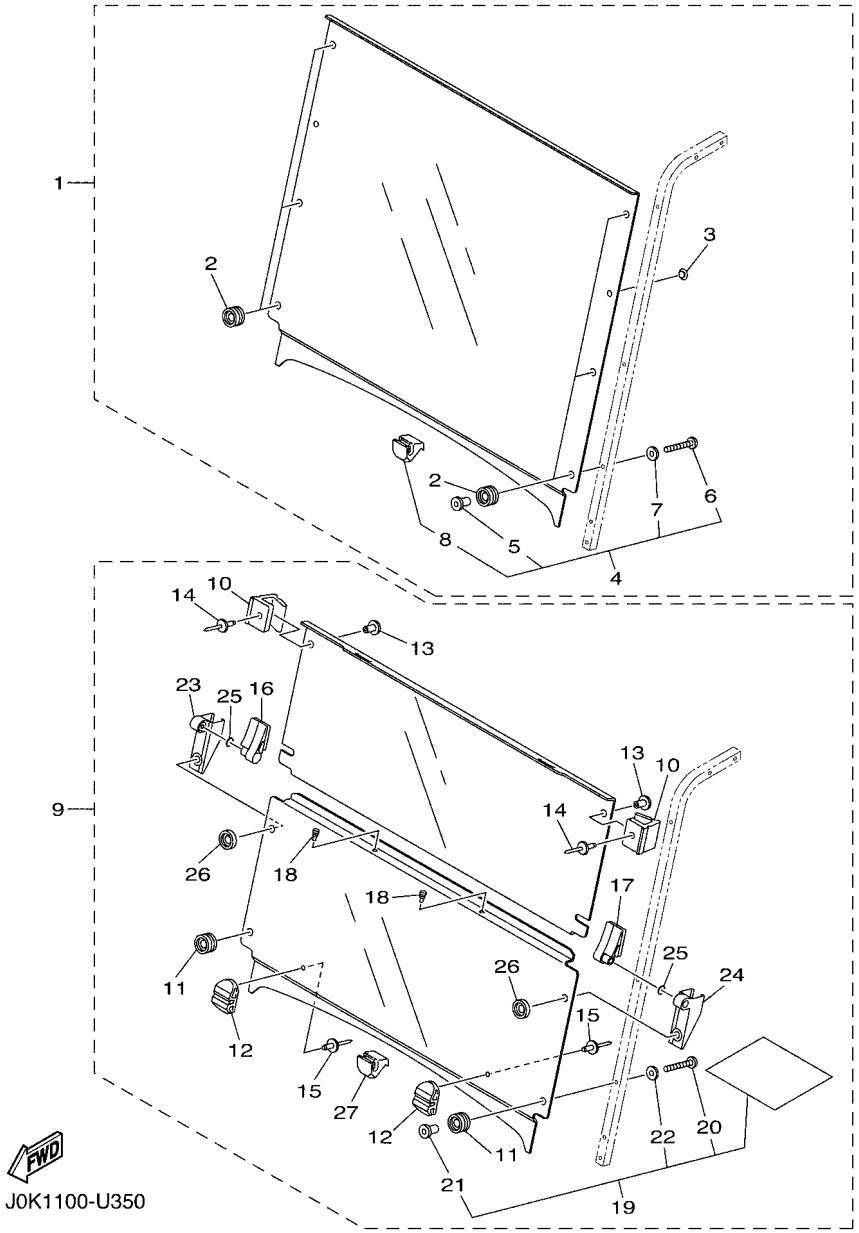

FIG. 37 ALTERNATE FOR WINDSHIELD

REF. NO.	PART NO.	DESCRIPTION	J0D4					REMARKS
26	J0B–K7247–00	.GROMMET, W/S 2	2					
27	J0B–K838A–20	.RETAINER 1	1					

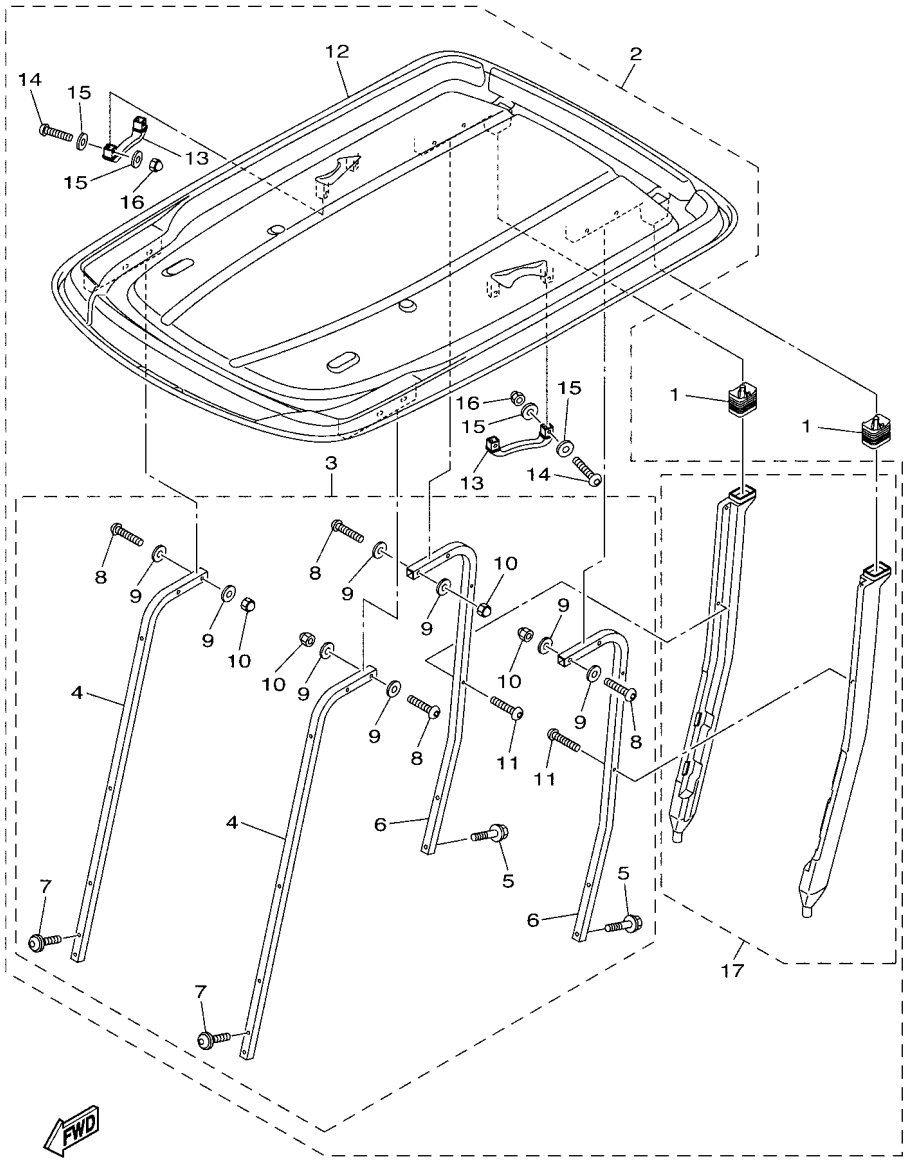

J0A2100-T370

FIG. 38 ALTERNATE FOR SUN ROOF

REF. NO.	PART NO.	DESCRIPTION	J0D4					REMARKS
1	JW1–F414G–10	SEAL	2					
2	J0B–K84A0–00	SUN TOP KIT	1					UR AP TAN
	J0B–K84A0–10	SUN TOP KIT	1					UR AP BLACK
3	J0B–K84A2–00	.HARDWARE KIT, SUN TOP	1					
4	J0B–K8312–00	..SUPPORT, SUN ROOF 1	2					
5	JW1–K8388–00	..BOLT, ROOF 1	4					
6	JW1–K8313–01	..SUPPORT, SUN ROOF 2	2					
7	J0B–K8388–00	..BOLT, ROOF 1	4					
8	JU0–K8388–00	..BOLT, ROOF 1	8					
9	JW1–F1549–01	..WASHER, FENDER MOLD	16					
10	JU0–K8398–00	..NUT, ROOF 1	8					
11	JW1–K7387–00	..SCREW	4					
12	JW1–K8314–10	.COVER, SUN ROOF	1					UR TAN
	JW1–K8314–21	.COVER, SUN ROOF	1					UR BLACK
13	JW1–K8214–00	.GRIP, HAND	2					
14	JU0–K8388–00	.BOLT, ROOF 1	4					
15	JW1–F1549–01	.WASHER, FENDER MOLD	8					
16	JU0–K8398–00	.NUT, ROOF 1	4					
17	J0B–F417A–00	.DRAIN TUBE ASSY	1					

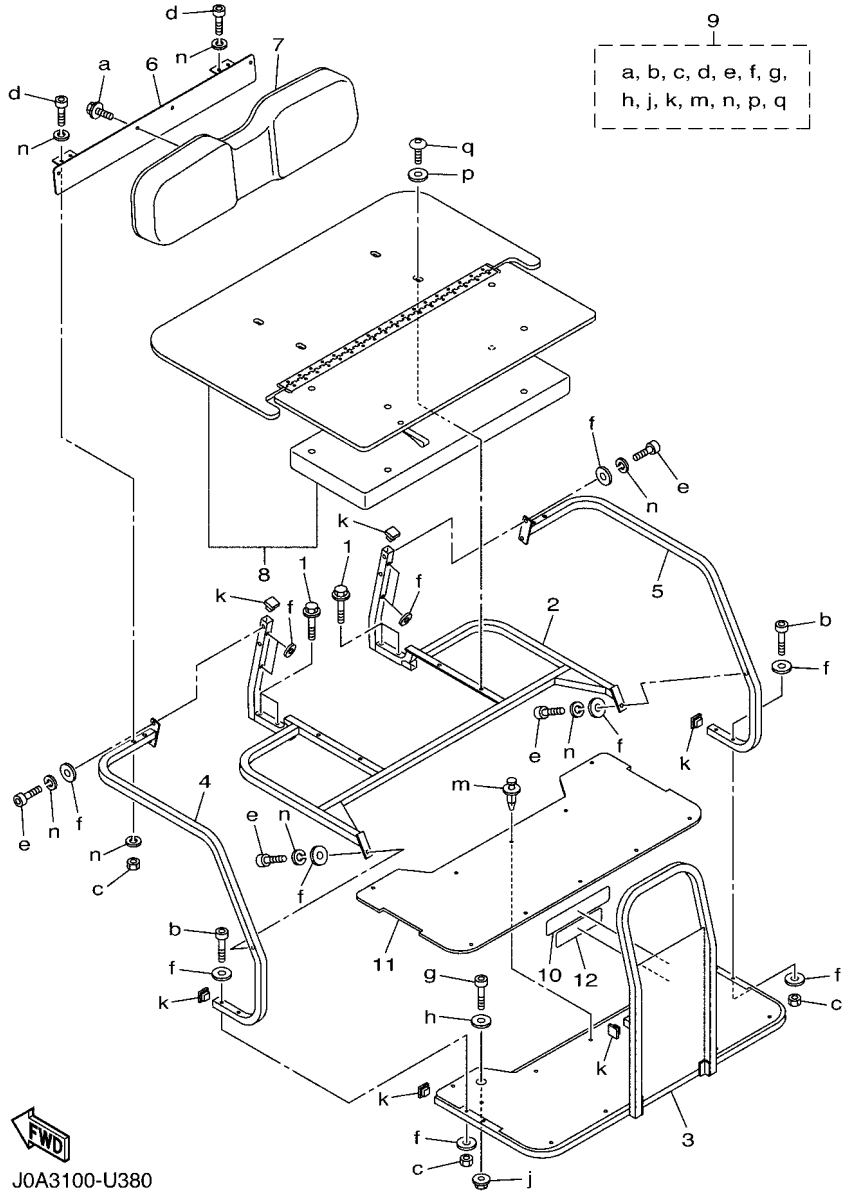

FIG. 39 ALTERNATE FOR SEAT

REF. NO.	PART NO.	DESCRIPTION	J0D4					REMARKS
1	90109–08178	BOLT	4					
2	J0B–K8460–00	SEAT FRAME COMP.	1					
3	J0B–K8477–00	FLOOR ASSEMBLY	1					
4	J0B–K8473–00	HANDRAIL ASSEMBLY (LH)	1					
5	J0B–K8474–00	HANDRAIL ASSEMBLY (RH)	1					
6	J0B–K8432–00	BRACKET, SEAT SUPPORT 2	1					
7	J0B–K8402–00	SEAT SUB ASSY, BACK	1					UR TAN
	J0B–K8402–10	SEAT SUB ASSY, BACK	1					UR BLACK
8	J0B–K8480–00	SEAT BOTTOM COMPLETE 1	1					UR TAN
	J0B–K8480–10	SEAT BOTTOM COMPLETE 1	1					UR BLACK
9	J0B–F47E2–00	HARDWARE KIT, TANDEM SEAT	1					
10	J0B–K8483–00	LABEL WARNING	1					
11	J0B–K8466–00	MAT, RUBBER	1					
12	J0B–F1696–00	LABEL, CAUTION	1					

PART NO.	REF. NO.
JT0–11111–00	2 – 1
JN6–11116–00	2 – 10
JN6–11133–10	2 – 2
JR7–11163–10	2 – 18
JN6–11168–00	2 – 11
JN6–11169–00	2 – 12
JT0–11181–00	2 – 3
JN6–11191–01	2 – 9
JN6–11193–00	2 – 13
812–11198–00	9 – 6
JN6–11400–00	3 – 1
JN6–11454–10	3 – 8
JR7–11610–00	3 – 3
JR7–11610–10	3 – 3
JR7–11610–20	3 – 3
JR7–11631–00–A0	3 – 2
583–11633–00	3 – 4
JR7–11635–00	3 – 2
JR7–11636–00	3 – 2
JN6–11650–10	3 – 6
JN6–11654–10	3 – 7
JN6–12111–10	4 – 2
J38–12117–01	4 – 6
J38–12118–00	4 – 7
4G0–12119–00	4 – 13
7RH–12121–10	4 – 3
JN6–12151–10	4 – 8
JN6–12153–10	4 – 4
JR7–12154–10	4 – 12
J38–12156–20	4 – 11
22F–12159–10	4 – 9
JR7–12180–10	4 – 1
JN6–12621–02	5 – 1
JR7–12634–00	5 – 9
JN6–12651–01	5 – 3
JN6–12652–00	5 – 5
JR7–12658–00	5 – 4
JC0–13542–01	7 – 3
JC0–13567–00	6 – 4
JN6–13567–00	6 – 3
	6 – 5
JC0–13595–00	6 – 1
J0B–13750–01	7 – 1
J0B–13770–00	7 – 5
J0D–13907–01	15 – 9
52S–13938–00	7 – 6
J0D–13971–00	15 – 13
52B–14137–00	7 – 7
52B–14147–00	7 – 8
5CA–14147–00	7 – 9
3B4–14424–00	6 – 14
5CA–14435–00	34 – 2
7KY–14613–01	8 – 3
JC0–15111–01	9 – 1
J38–15361–00	9 – 18
JT0–15362–00	34 – 28
796–15363–01	9 – 16
JN6–15411–01	9 – 8
JY2–15451–00	9 – 12
J0B–19001–40	1 – 1
JT0–21481–00	10 – 5
401–22128–01	13 – 16
2NL–23448–00	13 – 9
5KM–23448–00	11 – 39
2NL–23517–00	13 – 11
5UG–23517–10	11 – 40
2HR–23526–00	11 – 43
	13 – 3
JW8–23841–01	14 – 27
4WM–24180–00	15 – 15
1S3–24486–00	15 – 11
JC0–24491–00	15 – 10
J38–27204–00	18 – 3
J38–27205–00	18 – 14
J55–27260–00	18 – 19
J55–27270–00	18 – 8
J10–27282–00	18 – 5
	18 – 16
J0B–27951–00	19 – 1
J38–27959–00	19 – 5
J10–81115–10	32 – 21
J10–81129–10	32 – 24
J10–81139–10	32 – 25
J10–81146–10	32 – 11
J10–81147–10	32 – 14
J10–81148–10	32 – 7
J10–81159–10	32 – 4
JB2–81670–00	34 – 14
JF2–81910–11	35 – 20
1TP–81950–00	35 – 28
5EA–81952–00	35 – 29
J0B–82149–01	35 – 1
1S4–82310–01	34 – 17
JC0–82316–00	34 – 18
JN6–82370–00	34 – 23
JE8–82372–00	34 – 24
1C7–82380–00	7 – 2
JC0–82519–00	35 – 2
JN3–82617–01	23 – 17
JF7–82817–22	35 – 22
4LR–83371–11	35 – 40
4P9–83591–00	34 – 30
JC0–85650–10	34 – 13
JT0–85720–01	34 – 25
JT0–85724–00	34 – 27
5CA–85886–00	34 – 1
J0B–E1166–00	2 – 16
JW8–E1923–00	22 – 5
J0B–E2691–00	5 – 7
J0B–E4411–01	6 – 13
J0B–E4412–00	6 – 10
J0B–E4413–00	6 – 16
J0B–E4430–10	8 – 7
J0B–E4437–00	6 – 21
J0B–E4451–01	6 – 11
J0B–E4453–01	6 – 23
JU0–E445E–00	6 – 12
J0B–E4710–03	8 – 1
JW1–E4713–00	8 – 4
J0B–E5471–00	6 – 18
JW8–E7688–00	21 – 7
J0B–F125J–00	12 – 30
1NS–F1338–00	35 – 37
JW8–F135J–00	20 – 7
	21 – 4
J0B–F1411–00	10 – 1
J0B–F1419–01	10 – 4
J0B–F1436–00	8 – 2
J0B–F1485–00	10 – 8
J0B–F1531–00	11 – 3
JW1–F1549–01	38 – 9
	38 – 15
J0B–F1696–00	39 – 12
J0B–F1738–00	12 – 9
	12 – 10
	12 – 11
	12 – 29
	27 – 18
	27 – 23
	31 – 9
	31 – 11
JW1–F1738–00	15 – 7
J0D–F1781–00	27 – 27
J0D–F1781–10	27 – 27
J0D–F1782–00	27 – 28
J0D–F1782–10	27 – 28
J0B–F178D–A0	36 – 5
J0B–F2110–02	11 – 1
J0B–F2127–00	12 – 14
J0B–F2141–00	36 – 8
J0B–F2171–01	11 – 37
J0B–F2210–00	11 – 9
	11 – 22
5UG–F2465–10	35 – 36
J0B–F2501–20	12 – 1
J0B–F253B–01	12 – 4
J0B–F255G–00	12 – 2
J0B–F258E–10	12 – 12
J0B–F258R–01	12 – 17
J0B–F2873–01	27 – 25
J0B–F2874–01	27 – 26
J0B–F3113–00	11 – 14
	11 – 27
J0B–F3123–10	12 – 21
JW7–F312H–00	16 – 5
J0B–F3133–10	12 – 25
J0G–F3145–00	17 – 49
J0B–F3147–20	37 – 25
JW1–F3183–00	14 – 12
JW8–F3183–00	17 – 17
J0B–F3350–00	13 – 14
J0B–F3390–00	13 – 19
J0B–F3392–00	36 – 19
JW1–F3400–00	14 – 10
J0B–F3418–00	36 – 11
J0B–F3432–00	36 – 28
J0B–F3447–00	27 – 2
	27 – 9
	27 – 22
5UG–F3489–00	14 – 20
JU0–F3511–20	13 – 4
JW1–F3512–00	13 – 5
JU0–F3521–20	13 – 12
5UG–F3527–00	14 – 21
J0B–F3570–10	13 – 1
J0G–F3811–00	14 – 1
JW1–F3812–00	14 – 13
J0B–F381J–A0	36 – 6
JW1–F3822–01	14 – 29
JU0–F3828–10	14 – 4
1P0–F3833–00	14 – 26
JW1–F3837–00	14 – 22
J0B–F3838–00	14 – 6
J0B–F383A–00	36 – 22
J0B–F3841–A0	36 – 24
5UG–F3844–00	14 – 19
J0B–F3849–A0	36 – 17
JU0–F3857–20	14 – 3
	14 – 5
JW1–F3866–00	14 – 24
JW1–F387A–00	14 – 11
JW1–F387E–00	14 – 14
5UG–F387F–00	14 – 17
5UG–F387G–00	14 – 15
5UG–F387J–00	14 – 18
5UG–F387K–00	14 – 16
J0B–F3880–A0	36 – 21
JW1–F3894–00	14 – 25
J0B–F389G–00	36 – 16
J0B–F389J–A0	36 – 2
J0B–F389K–A1	36 – 15
JC0–F4111–02	15 – 1
JW1–F4112–00	15 – 3
JW1–F414G–10	38 – 1
J0B–F4161–00	26 – 2
7CC–F4170–01	15 – 14
J0B–F417A–00	38 – 17
J0B–F419A–00	15 – 20
J0B–F4217–00	15 – 5
J0B–F4314–00	15 – 17
J0B–F4316–00	15 – 18
J0B–F4317–00	15 – 19
JU5–F4375–00	15 – 4
JW8–F4486–00	17 – 44
	17 – 48
JW1–F4610–11	15 – 2
JW1–F467K–00	14 – 23
J0B–F4681–00	36 – 3
	36 – 10
J0B–F47E2–00	39 – 9
JW8–F47E3–00	22 – 36
J0B–F4881–00	35 – 55
JC1–F5100–01	13 – 31
	24 – 5
JC1–F5103–00	13 – 21
JW8–F5118–00	24 – 7
JN6–F5118–01	13 – 29
J0B–F518F–00	24 – 9
J0B–F518G–00	24 – 10
J0B–F5310–10	24 – 1
J0B–F537W–00	11 – 16
	11 – 29
J0B–F53A1–01	11 – 10
	11 – 23
JW8–F5415–00	17 – 26
J0B–F5522–00	36 – 14
JW9–F5666–00	17 – 13
J0G–F5671–00	17 – 4
JW9–F5673–00	17 – 45
JW8–F5681–10	16 – 6
JN6–F5685–01	16 – 7
J0G–F5922–00	17 – 43
JC0–F6280–11	30 – 1
JC0–F6291–11	30 – 2
J0B–F6311–00	17 – 51
J0B–F6312–00	6 – 15
JW8–F6314–00	17 – 22
J0B–F6341–00	16 – 1
J0B–F6351–00	16 – 2
JW8–F639N–00	17 – 10
JW8–F7118–00	17 – 41
JW8–F7119–00	17 – 29
JW8–F7121–00	17 – 14
J0G–F7200–02	17 – 2
JW8–F7213–20	17 – 34
JW8–F7217–00	17 – 32
J0G–F7218–00	17 – 11
JW9–F7221–00	17 – 15
J0B–F7224–00	36 – 7
JW9–F7228–00	17 – 24
J0B–F722B–A3	36 – 1
JU0–F722H–00	22 – 7
JW9–F7231–10	17 – 19
JW9–F7232–00	17 – 20
JU0–F723F–00	22 – 35
JW9–F7245–10	17 – 30
JW9–F7246–20	17 – 46
JW8–F7280–10	18 – 1
JW8–F7281–00	18 – 4
	18 – 15
JW8–F7286–00	18 – 9
	18 – 20
JW8–F7290–10	18 – 12
J0G–F7313–00	17 – 12
JW8–F7316–01	17 – 31
JW8–F7317–00	17 – 40
JW8–F7318–00	17 – 21
JW8–F7322–00	17 – 16

PART NO.	REF. NO.
J0D–F7411–01	12 – 7
J0B–F7413–01	12 – 6
J0G–F7416–00	17 – 9
JW8–F7426–01	17 – 18
JW8–F7434–00	17 – 39
JW8–F7438–00	17 – 38
J0G–F7445–10	17 – 33
J0G–F7814–00	17 – 23
JW8–F7814–21	17 – 3
J0G–F7825–00	17 – 28
J0G–F7850–20	17 – 1
J0G–F7853–10	17 – 35
J0G–F7854–00	17 – 5
J0G–F7871–01	17 – 36
J0G–F7872–00	17 – 37
J0G–F815H–10	17 – 42
J0B–F8218–00	11 – 4
J0B–F8228–00	11 – 5
J0B–F8238–00	11 – 6
J0B–F8268–00	11 – 7
J0B–F8278–00	11 – 8
JC0–F831W–20	30 – 3
JW8–F8323–00	17 – 25
JW8–F8331–00	17 – 47
JC0–F834N–20	30 – 4
JW8–F8363–00	17 – 8
J0B–G1148–00	22 – 33
J0B–G1297–00	22 – 23
J0B–G2391–00	22 – 6
JW8–G2541–00	22 – 46
JC1–G2544–00	22 – 41
J0B–G3127–00	22 – 10
J0B–G3812–00	22 – 11
JW8–G4189–00	20 – 6
J0B–G5148–00	22 – 44
JW8–G5282–00	20 – 18
JW8–G5378–00	22 – 38
JW8–G5531–00	21 – 9
JW8–G5618–00	20 – 10
	20 – 15
JW8–G5621–00	20 – 16
JW8–G5677–00	21 – 12
JW8–G5697–20	21 – 15
J0B–G580H–00	22 – 18
J0B–G6153–00	22 – 27
JW8–G6159–00	21 – 8
J0B–G6164–00	22 – 9
J0B–G6201–01	20 – 1

PART NO.	REF. NO.
JW8–G6202–23	21 – 1
JW8–G6205–22	20 – 9
JW8–G6210–01	20 – 2
J0B–G6220–01	20 – 3
J0B–G6231–00	20 – 17
JW8–G6236–20	20 – 12
JW8–G6237–20	20 – 13
J0D–G6241–00	20 – 21
JW8–G6249–00	20 – 19
JW8–G624A–00	20 – 4
JW8–G624B–00	21 – 5
JW8–G6251–21	20 – 8
JW8–G6253–00	20 – 5
JW8–G6260–23	21 – 2
JW8–G6270–21	21 – 3
JW8–G6275–10	21 – 11
JW8–G6284–10	21 – 6
J0D–G6301–00	22 – 2
J0B–G6314–00	22 – 31
J0B–G6316–00	22 – 24
J0D–G6320–00	22 – 8
J0B–G6326–00	22 – 25
J0D–G6327–00	22 – 30
J0B–G633E–00	22 – 3
J0B–G633G–00	22 – 26
JN3–G6344–00	22 – 45
J0B–G6355–00	22 – 43
J0B–G6356–00	22 – 20
J0B–G6371–00	23 – 3
J0B–G6372–10	23 – 15
JW8–G6374–00	21 – 10
JN3–G6376–00	23 – 10
JU0–G6376–00	22 – 13
JN3–G6381–00	23 – 9
J0B–G6382–00	23 – 5
JW8–G6383–10	23 – 4
J0B–G638A–00	22 – 29
J0B–G638E–00	22 – 28
J0B–G6410–00	22 – 40
JN3–G6432–00	22 – 32
JW3–G6521–00	24 – 6
J0B–G6555–00	22 – 12
J0B–G6556–00	22 – 47
JW8–G7339–00	20 – 20
J0B–G8330–00	23 – 2
JN6–H1100–04	32 – 1
JN6–H1110–10	32 – 5
JF2–H1111–00	32 – 19

PART NO.	REF. NO.
JN6–H1113–00	32 – 20
JN6–H1119–00	32 – 18
JW1–H1128–00	35 – 54
J10–H1145–10	32 – 26
J10–H1157–10	32 – 2
J10–H1158–10	32 – 3
JN6–H1160–10	32 – 6
JN6–H1161–00	32 – 29
JN6–H1165–00	32 – 12
J10–H1166–10	32 – 13
JW1–H1170–11	34 – 4
JN6–H1171–11	34 – 10
JW1–H1173–02	34 – 12
JN3–H1661–00	32 – 28
JW9–H1674–00	31 – 1
JW1–H1950–00	35 – 16
J0B–H2115–00	35 – 8
J0B–H2116–01	35 – 9
J0B–H2117–00	35 – 10
JW1–H2133–00	35 – 4
J55–H2136–00	35 – 5
J0D–H2151–00	35 – 15
J0D–H21E0–02	35 – 44
J0D–H21E1–01	35 – 45
J0D–H21E2–01	35 – 46
J0B–H2370–00	26 – 13
JW1–H2386–10	35 – 56
JW6–H2510–00	35 – 48
JU6–H2511–10	35 – 49
JU6–H2569–00	35 – 51
5UG–H2579–00	35 – 50
J0D–H2590–01	35 – 11
JR6–H270X–00	35 – 41
J0D–H333B–00	26 – 14
J0D–H334B–00	26 – 15
JR1–H3383–02	35 – 25
JN6–H3386–01	35 – 26
JC0–H351C–10	35 – 52
JN6–H351C–10	35 – 53
J0D–H3547–00	33 – 8
	33 – 20
J0D–H360G–00	27 – 31
J0D–H360H–00	27 – 32
J0D–H4110–01	33 – 1
J0D–H411T–00	33 – 3
J0D–H411U–00	33 – 15
J0D–H4170–01	33 – 13
J0D–H4195–00	33 – 10

PART NO.	REF. NO.
J0D–H4195–00	33 – 22
J0D–H4300–00	33 – 2
	33 – 14
J0D–H431U–00	33 – 26
J0D–H4385–00	33 – 4
J0D–H4386–00	33 – 16
J0D–H4387–00	33 – 33
JC0–H4514–01	33 – 28
	33 – 35
J0D–H4524–00	33 – 9
	33 – 21
J0D–H4526–00	33 – 6
	33 – 18
J0D–H4700–01	33 – 27
	33 – 34
J0D–H4710–01	33 – 25
J0D–H4718–00	33 – 29
	33 – 36
J0D–H4726–00	33 – 7
	33 – 19
J0D–H4730–01	33 – 32
J0D–H5490–01	33 – 5
	33 – 17
J0B–H5546–00	34 – 32
JW6–H554E–00	35 – 12
JW6–H554E–10	35 – 14
JW6–H554E–20	35 – 13
J0B–H591A–01	34 – 31
J0B–K7115–00	14 – 37
J0B–K7145–20	37 – 16
J0B–K7146–20	37 – 17
J0B–K7147–20	37 – 23
J0B–K7148–20	37 – 24
J0B–K7155–20	37 – 15
J0G–K7155–C0	37 – 13
J0G–K7156–C0	37 – 14
J0B–K7173–21	37 – 10
JC0–K7178–00	30 – 6
J0B–K7200–01	37 – 1
J0B–K7200–11	37 – 1
J0B–K7200–24	37 – 9
J0B–K7200–34	37 – 9
JC0–K7212–10	30 – 8
J0B–K7217–00	37 – 5
	37 – 21
JW1–K7217–10	30 – 7
J0B–K7218–00	37 – 7
	37 – 22

PART NO.	REF. NO.
J0B–K7237–00	37 – 2
	37 – 11
J0B–K7238–00	37 – 3
J0B–K7240–01	37 – 4
J0B–K7240–20	37 – 19
J0B–K7247–00	37 – 26
J0B–K7248–00	37 – 6
	37 – 20
J0B–K7257–20	37 – 12
JW7–K7329–00	15 – 21
	27 – 17
	35 – 57
J0B–K7363–00	14 – 36
J0B–K7387–00	14 – 34
JW1–K7387–00	38 – 11
JW1–K7387–20	30 – 5
J0B–K7389–00	29 – 5
J0B–K7510–01	25 – 1
J0B–K7529–20	37 – 18
J0B–K7540–00	25 – 7
JU0–K7573–00	26 – 3
JW1–K7741–00	27 – 29
J0B–K7761–A0	36 – 31
J0D–K7762–20	14 – 38
J0D–K7762–30	14 – 38
J0D–K7768–00	26 – 8
J0D–K7768–10	26 – 8
J0D–K7768–20	26 – 8
J0D–K7768–30	26 – 8
J0D–K8111–00	27 – 1
J0D–K8111–30	27 – 1
J0D–K8111–70	27 – 1
J0D–K8111–80	27 – 1
J0D–K8111–90	27 – 1
J0D–K8111–A0	27 – 1
J0D–K8111–T0	27 – 1
J0D–K8111–U0	27 – 1
J0D–K8111–V0	27 – 1
J0D–K8112–00	27 – 8
J0D–K8112–30	27 – 8
J0D–K8112–70	27 – 8
J0D–K8112–80	27 – 8
J0D–K8112–90	27 – 8
J0D–K8112–A0	27 – 8
J0D–K8112–T0	27 – 8
J0D–K8112–U0	27 – 8
J0D–K8112–V0	27 – 8
J0D–K8114–01	26 – 6

PART NO.	REF. NO.
J0D–K8115–00	26 – 1
J0D–K8115–30	26 – 1
J0D–K8115–70	26 – 1
J0D–K8115–80	26 – 1
J0D–K8115–90	26 – 1
J0D–K8115–A0	26 – 1
J0D–K8115–T0	26 – 1
J0D–K8115–U0	26 – 1
J0D–K8115–V0	26 – 1
JR1–K8139–00	27 – 30
J0B–K8141–00	27 – 19
J0B–K8141–30	27 – 19
J0B–K8141–70	27 – 19
J0B–K8141–80	27 – 19
J0B–K8141–90	27 – 19
J0B–K8141–A0	27 – 19
J0B–K8141–T0	27 – 19
J0B–K8141–U0	27 – 19
J0B–K8141–V0	27 – 19
J0B–K814E–00	27 – 3
	27 – 10
J0B–K814F–00	27 – 4
	27 – 11
J0B–K814R–00	27 – 14
J0B–K814T–00	27 – 15
J0B–K814U–00	27 – 16
J0B–K8164–00	25 – 2
J1B–K816M–00	12 – 15
J0B–K817H–00	27 – 34
J0B–K817H–10	27 – 34
J0B–K817J–00	27 – 35
J0B–K817J–10	27 – 35
J0B–K8187–00	28 – 13
J0B–K818A–00	28 – 2
J0B–K818B–00	28 – 5
J0B–K8191–00	28 – 8
J0B–K8192–00	28 – 10
J0B–K8197–01	28 – 12
J0B–K819H–00	27 – 13
JW1–K8214–00	38 – 13
J0B–K821A–00	12 – 20
J0D–K8233–00	26 – 16
J0B–K8237–02	27 – 21
J0B–K8243–00	26 – 19
J0B–K8244–00	26 – 21
J0B–K8245–00	31 – 4
J0B–K8246–00	31 – 5
J0B–K8247–00	31 – 6

PART NO.	REF. NO.
J0B–K8248–00	31 – 7
J0B–K8251–00	27 – 6
J0B–K8252–01	12 – 18
J0B–K8253–00	15 – 23
J0B–K8254–00	11 – 38
J0B–K8255–02	27 – 24
J0B–K8256–00	12 – 22
J0B–K8257–00	12 – 23
J0B–K8258–00	12 – 24
J0B–K8259–00	12 – 26
J0B–K825A–00	12 – 27
J0B–K825E–00	12 – 28
J0D–K825G–00	27 – 7
J0B–K8271–01	28 – 1
J0B–K8273–10	26 – 18
J0D–K8282–00	26 – 9
JW1–K8297–02	27 – 33
JW1–K8297–11	27 – 33
J0B–K8312–00	38 – 4
JW1–K8313–01	38 – 6
JW1–K8314–10	38 – 12
JW1–K8314–21	38 – 12
J0B–K832F–00	26 – 23
J1B–K832F–00	26 – 23
J0B–K832G–00	26 – 24
J1B–K832G–00	26 – 24
JW1–K8340–00	29 – 3
JW1–K834G–00	29 – 9
JN6–K8355–20	29 – 8
JF2–K8356–00	29 – 7
J0D–K8357–00	14 – 32
J0B–K8358–00	14 – 33
J0B–K835E–00	26 – 10
J0B–K8361–00	31 – 8
J0B–K8362–00	31 – 10
JN6–K8380–00	29 – 12
J0B–K8388–00	38 – 7
JU0–K8388–00	38 – 8
	38 – 14
JW1–K8388–00	38 – 5
J0B–K838A–20	37 – 8
	37 – 27
JU0–K8398–00	38 – 10
	38 – 16
J0B–K8401–10	31 – 3
J0B–K8402–00	39 – 7
J0B–K8402–10	39 – 7
JW1–K8402–10	31 – 14
J0B–K8423–00	29 – 1
J0B–K8426–10	31 – 12
J0B–K8427–00	31 – 2
J0B–K8432–00	39 – 6
J0B–K8460–00	39 – 2
J0B–K8466–00	39 – 11
J0B–K8473–00	39 – 4
J0B–K8474–00	39 – 5
J0B–K8477–00	39 – 3
J0B–K8480–00	39 – 8
J0B–K8480–10	39 – 8
J0B–K8483–00	39 – 10
J0B–K84A0–00	38 – 2
J0B–K84A0–10	38 – 2
J0B–K84A2–00	38 – 3
JN9–W2536–11	18 – 2
	18 – 13
90105–06057	6 – 19
90105–06831	23 – 16
	26 – 4
	35 – 19
90105–06870	35 – 21
90105–08260	21 – 14
90105–082A0	18 – 23
90105–08867	12 – 5
	12 – 13
	12 – 19
	22 – 48
	35 – 35
90105–088A9	36 – 27
90105–088B6	12 – 16
90105–10185	11 – 41
90105–10219	13 – 8
90105–10267	11 – 44
	13 – 13
	13 – 20
90105–10373	13 – 6
90105–10847	14 – 28
90109–08178	29 – 2
	39 – 1
90109–08827	34 – 6
90110–06125	31 – 13
90111–05805	26 – 11
90113–04803	20 – 11
	20 – 14
90113–08803	22 – 14
90114–12006	24 – 2
90114–12805	13 – 22
90119–06808	31 – 15
90119–06868	35 – 31
	35 – 47
90159–06845	29 – 13
90170–05302	4 – 10
90170–10840	22 – 42
90176–06008	29 – 6
90179–05807	35 – 17
90179–08822	16 – 8
90179–08824	35 – 18
90179–12262	13 – 30
	24 – 4
90179–16889	32 – 30
90179–20016	24 – 3
90183–05008	26 – 12
90183–08800	33 – 11
	33 – 23
	33 – 30
	33 – 37
90185–06836	29 – 11
90185–10012	11 – 42
90185–12008	14 – 7
90185–12810	13 – 18
90185–12811	11 – 18
	11 – 31
	14 – 9
90201–04810	14 – 35
90201–06102	36 – 33
90201–10057	2 – 5
	9 – 15
90201–10072	10 – 3
90201–121H8	18 – 11
	18 – 22
90201–121H9	18 – 10
	18 – 21
90201–128S4	36 – 12
90201–18620	34 – 21
90201–198S7	23 – 12
90201–20035	24 – 8
90201–208H9	22 – 19
90201–208J0	22 – 21
90201–208S8	23 – 11
	36 – 18
90208–14801	13 – 27
90209–08013	21 – 13
90249–14129	16 – 10
90269–06804	26 – 5
	28 – 4
90269–06804	28 – 7
	28 – 9
	28 – 11
90269–07805	26 – 20
	26 – 22
	27 – 5
	27 – 12
	27 – 20
90269–08001	26 – 7
90269–09003	12 – 8
	26 – 17
	28 – 3
	28 – 6
90269–10001	5 – 8
90280–04052	34 – 22
90340–12097	9 – 5
90381–17800	13 – 10
90381–17803	11 – 15
	11 – 28
90381–18801	13 – 2
90386–08141	19 – 3
90386–12800	17 – 27
90387–12016	13 – 15
90387–241M7	13 – 25
90450–54008	15 – 6
90461–14108	35 – 30
90462–05061	2 – 15
90464–09823	8 – 8
	35 – 32
90464–12836	35 – 58
90464–18246	15 – 22
90464–20005	35 – 33
90464–40825	15 – 16
	35 – 38
90464–48800	35 – 34
90464–51800	35 – 39
90464–76800	12 – 31
	28 – 14
90465–06038	23 – 18
90467–13847	2 – 19
90467–24140	6 – 22
90468–10049	6 – 8
	17 – 53
90468–20196	16 – 4
90480–13016	33 – 12
	33 – 24
	33 – 31
	33 – 38
90480–20564	34 – 15
90501–10852	22 – 15
90501–264A9	4 – 5
90506–14001	18 – 7
	18 – 18
90506–20281	18 – 6
	18 – 17
90508–16460	17 – 54
90508–40678	19 – 4
90560–05001	17 – 55
90560–08251	15 – 8
91402–20012	23 – 8
91402–25020	36 – 26
91490–25015	16 – 13
91702–05010	6 – 7
91702–05014	17 – 52
91702–06014	23 – 6
91702–08018	16 – 12
91702–10026	16 – 3
92012–06030	34 – 8
92017–06040	29 – 4
92902–05600	35 – 24
92902–06200	35 – 6
92902–06600	23 – 7
92902–08600	14 – 31
92902–10200	10 – 6
92902–12200	14 – 8
92907–06100	32 – 10
	32 – 17
9290N–06600	32 – 9
	32 – 16
	32 – 27
9299R–06200	29 – 14
93102–25868	22 – 17
93102–30083	13 – 26
93102–35014	9 – 3
	9 – 10
93104–11829	22 – 37
93106–38046	11 – 13
	11 – 26
93109–10820	22 – 34
93210–15414	34 – 29
93210–19001	11 – 21
	11 – 34
93210–22344	9 – 17
93306–005Y3	13 – 24
93306–006X0	11 – 11
	11 – 24
93306–006Y4	11 – 12
	11 – 25
93306–007Y0	22 – 39
93306–20201	9 – 4
	9 – 11
93306–204X0	13 – 23
93306–20714	9 – 9
93306–303Y6	22 – 4
93306–30709	9 – 2
93450–21053	3 – 5
93450–22119	24 – 11
93500–06826	22 – 16
93606–10842	22 – 22
94702–00343	2 – 8
94702–00348	2 – 8
95302–06600	19 – 2
	34 – 9
95302–06800	15 – 12
95302–08700	25 – 5
95302–10600	36 – 23
95302–18600	34 – 20
95307–08700	16 – 9
9530N–06600	32 – 8
	32 – 15
95602–06200	19 – 6
	36 – 34
95602–08100	23 – 1
	36 – 30
95602–08200	36 – 29
95602–08710	2 – 17
95602–10200	10 – 7
	10 – 9
	11 – 36
	11 – 45
	13 – 7
	25 – 8
	36 – 25
95602–12200	36 – 13
	36 – 20
95602–14100	13 – 28
95607–06200	17 – 6
95622–08618	2 – 7
95702–06500	35 – 7
	35 – 43
95702–08500	6 – 2
	8 – 6
	11 – 20
	11 – 33

PART NO.	REF. NO.
95702–08500	34 – 7
95802–06016	6 – 6
95802–06020	5 – 2
	5 – 6
95802–10035	36 – 9
95802–10050	36 – 4
95812–06025	7 – 10
	36 – 32
95812–08016	25 – 3
95812–08020	14 – 2
	17 – 50
95812–08040	12 – 3
95812–08045	9 – 13
95812–08050	25 – 4
95812–08060	11 – 19
	11 – 32
95812–10020	10 – 2
	22 – 1
95812–10055	11 – 35
95812–12030	34 – 3
95812–12055	11 – 17
	11 – 30
95812–12080	13 – 17
95822–06012	25 – 6
	34 – 26
	35 – 3
95822–06016	34 – 16
	34 – 19
	35 – 42
95822–06030	2 – 14
95822–08020	8 – 5
	34 – 5
	34 – 11
95822–10020	11 – 2
97012–06020	17 – 7
97012–08030	14 – 30
97012–10050	9 – 14
97012–10070	2 – 4
9708R–06020	29 – 10
97602–04316	23 – 14
97702–50016	6 – 20
97702–60416	6 – 17
98502–05025	35 – 23
98502–06014	7 – 4
9850N–04010	32 – 23
9850N–05016	32 – 22
9850N–05018	32 – 31
99001–07600	6 – 9
99001–09600	16 – 11
99009–19400	23 – 13
99530–08016	9 – 7
99530–14016	2 – 6