YAMAHA

PARTS CATALOGUE

DR2A20T EFI (J1J1) OTHERS

YAMAHA GENUINE Parts & Accessories

1VJ1J-400E1

( )

DR2A20T EFI
PARTS CATALOGUE
©2020 by Yamaha Motor Co., Ltd.
1st edition, October 2020
All rights reserved.
Any reprinting or unauthorized use
without the written permission of
Yamaha Motor Co., Ltd.
is expressly prohibited.
Printed in Japan.

FOREWORD

This Parts Catalogue is related to the parts for the model(s) on the cover page. When you are ordering replacement parts, please refer to this Parts Catalogue and quote both part numbers and part names correctly.

1. Modifications or additions which have been made after the issue of the Parts Catalogue will be announced in the Parts News.
   It is advisable that you make the necessary corrections to the Parts Catalogue according to the Parts News.

2. Abbreviations
   The following abbreviations are used in this Parts Catalogue.

   "UR" Use specified parts number.

   "UN" Use as many as needed.

   "AP" Alternate Parts

   "LM" Locally Made (Parts need to be ordered locally)

   "F#" Frame No. (Applicable machine No.)

   "O/S" Over Size

3. The number of components for assembly
   - Parts, which are to be supplied in an assembly, are listed with a dot (.) in front of the part name as shown below.
   - The numeral appearing to the right of each component part indicates the quantity of parts for each assembly unit.

PART NO.	DESCRIPTION	Q'TY	REMARKS
2F5–83310–60	FRONT FLASHER LIGHT ASSY	2	
115–83311–60	.BULB (6V–18W)	1	

4. Applicable colours of graphics are represented in the "REMARKS" as shown below.

PART NO.	DESCRIPTION	Q'TY	REMARKS
2N4–24110–00–X5	FUEL TANK COMP.	2	MXR
3J1–24240–10	.GRAPHIC, FUEL TANK	1	FOR MXR

5. Note that the illustrations for reference in finding parts numbers are not to be used for assembling. When assembling, please use the applicable service manual.

6. The asterisk (*) before a reference number indicates modified items after the first edition.

7. Applicable Serial No.

Engine Serial No.

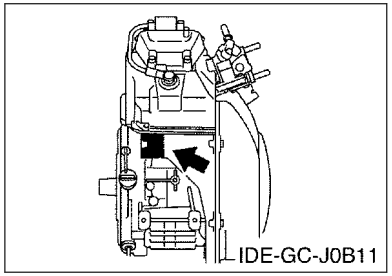

Frame Serial No.

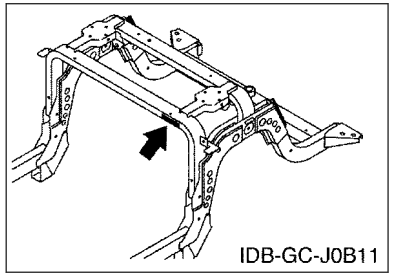

8. Applicable Colour Code (The (*) mark shows Model colour.)

Abbreviation	Colour Name	Colour Code
BW1(*)	BLUISH WHITE 1	1571
DNGM3(*)	DARK GRAYISH GREEN METALLIC 3	0712
DPBMU(*)	DARK PURPLISH BLUE METALLIC U	0996
DRMK(*)	DEEP RED METALLIC K	0918
LYNM9(*)	LIGHT YELLOWISH GRAY ME 9	0752
SM1(*)	SILVER METALLIC 1	0660

9. Quantity Column Information

Column No.	Name Of Q'ty Column	Destination
1	J1J1	OTHERS

10. Applicable Starting Serial No.

Frame Serial No.

Serial No.	Name Of Q'ty Column	Model Code
J1J-101001	J1J1	J1J1

CONTENTS

ENGINE

CYLINDER HEAD....1
CRANKSHAFT & PISTON....2
CAMSHAFT & VALVE....3
AIR SHROUD & FAN....4
INTAKE 1....5
INTAKE 2....6
EXHAUST....7
CRANKCASE....8

BODY

ENGINE BRACKET....9
REAR ARM & SUSPENSION....10
FRAME....12
FRONT SUSPENSION & WHEEL....14
STEERING....16
FUEL TANK....18
PEDAL WIRE....19
PEDAL ASSEMBLY....20
BRAKE....23
GOVERNOR....24

DRIVE

PRIMARY SHEAVE....25
SECONDARY SHEAVE....26
TRANSMISSION....27
SHIFTER & CABLES....29
REAR AXLE & WHEEL....30

R/G

WINDSHIELD....31
BUMPER....32
BODY....33
BODY 2....35
BODY FITTING....37
SUN ROOF....38
CARRIER....39
SEAT....40

ELECTRICAL

STARTING MOTOR....41
ELECTRICAL 1....42
ELECTRICAL 2....44

INDEX

NUMERICAL INDEX....46

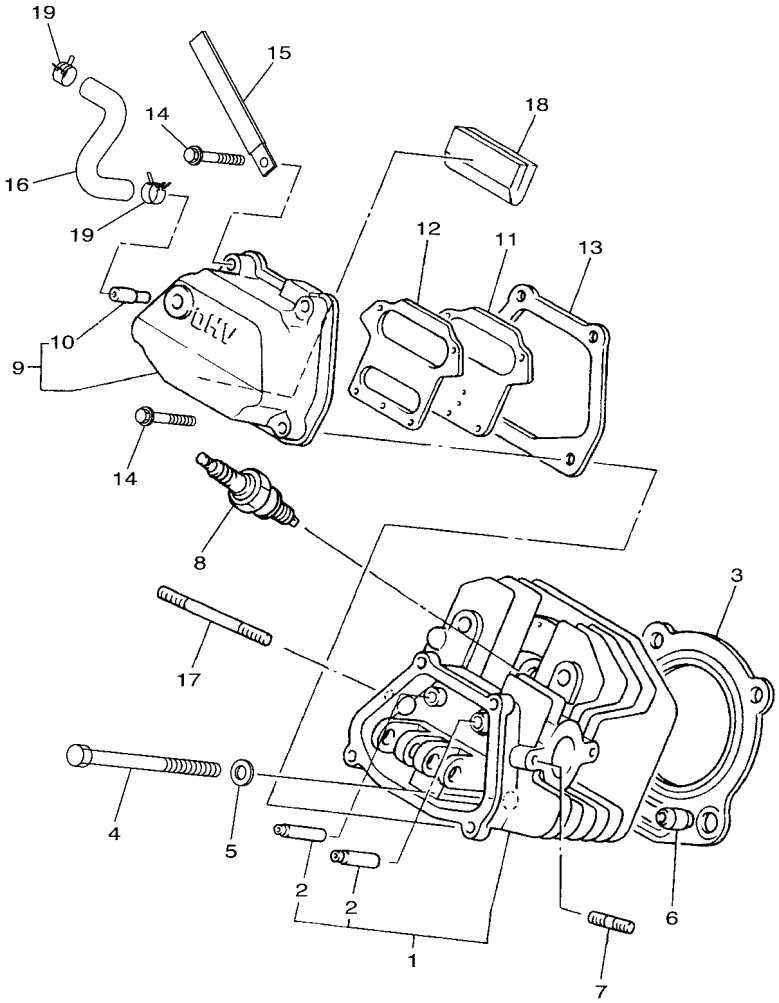

J0B1110-S010

FIG. 1 CYLINDER HEAD

REF. NO.	PART NO.	DESCRIPTION	J1J1					REMARKS
1	JT0–11111–00	HEAD, CYLINDER 1	1					
2	JN6–11133–10	.GUIDE, VALVE 1	2					
3	JT0–11181–00	GASKET, CYLINDER HEAD 1	1					
4	97012–10070	BOLT	4					
5	90201–10057	WASHER, PLATE	4					
6	99530–14016	PIN, DOWEL	2					
7	95622–08618	BOLT, STUD	2					
8	94702–00348	PLUG, SPARK (NGK-BPR2ES)	1					
9	JN6–11191–01	COVER, CYLINDER HEAD 1	1					
10	JN6–11116–00	.JOINT, BREATHER	1					
11	JN6–11168–00	COVER, BREATHER	1					
12	JN6–11169–00	GASKET, BREATHER COVER	1					
13	JN6–11193–00	GASKET, HEAD COVER 1	1					
14	95822–06030	BOLT, FLANGE	4					
15	90462–05061	CLAMP	1					
16	J1J–E1166–00	PIPE, BREATHER 1	1					
17	95602–08710	BOLT, STUD	2					
18	JR7–11163–10	ELEMENT	1					
19	90467–13806	CLIP	2					

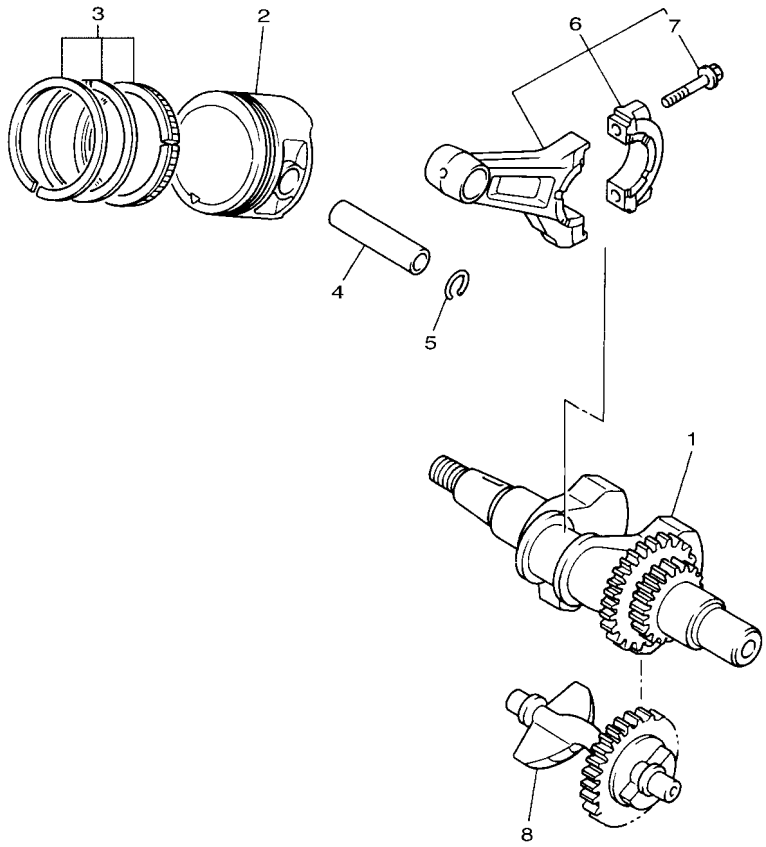

JN7010-6021

FIG. 2 CRANKSHAFT & PISTON

REF. NO.	PART NO.	DESCRIPTION	J1J1					REMARKS
1	JN6–11400–00	CRANKSHAFT ASSY	1					
2	JR7–11631–00–A0	PISTON (STD)	1					
	JR7–11635–00	PISTON (0.25MM O/S)	1					AP
	JR7–11636–00	PISTON (0.50MM O/S)	1					AP
3	JR7–11610–00	PISTON RING SET (STD)	1					
	JR7–11610–10	PISTON RING SET (0.25MM O/S)	1					AP
	JR7–11610–20	PISTON RING SET (0.50MM O/S)	1					AP
4	583–11633–00	PIN, PISTON	1					
5	93450–21053	CIRCLIP	2					
6	JN6–11650–10	CONNECTING ROD ASSY	1					
7	JN6–11654–10	.BOLT, CONNECTING ROD	2					
8	JN6–11454–10	WEIGHT 1	1					

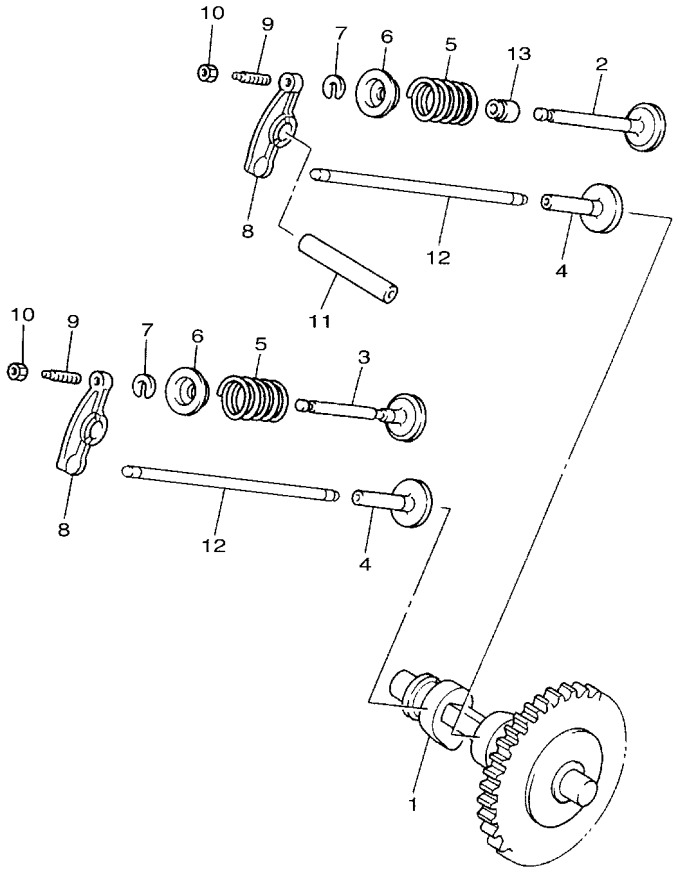

FWD

JD13110-K030

FIG. 3 CAMSHAFT & VALVE

REF. NO.	PART NO.	DESCRIPTION	J1J1					REMARKS
1	JR7–12180–10	CAMSHAFT ASSY 2	1					
2	JN6–12111–10	VALVE, INTAKE	1					
3	7RH–12121–10	VALVE, EXHAUST	1					
4	JN6–12153–10	LIFTER, VALVE	2					
5	90501–264A9	SPRING, COMPRESSION	2					
6	J38–12117–01	RETAINER, VALVE SPRING	2					
7	J38–12118–00	LOCK, VALVE SPRING RETAINER	2					
8	JN6–12151–10	ARM, VALVE ROCKER	2					
9	22F–12159–10	SCREW, VALVE ADJUSTING	2					
10	90170–05302	NUT	2					
11	J38–12156–20	SHAFT, ROCKER 2	1					
12	JR7–12154–10	ROD, VALVE PUSH	2					
13	4G0–12119–00	SEAL, VALVE STEM	1					

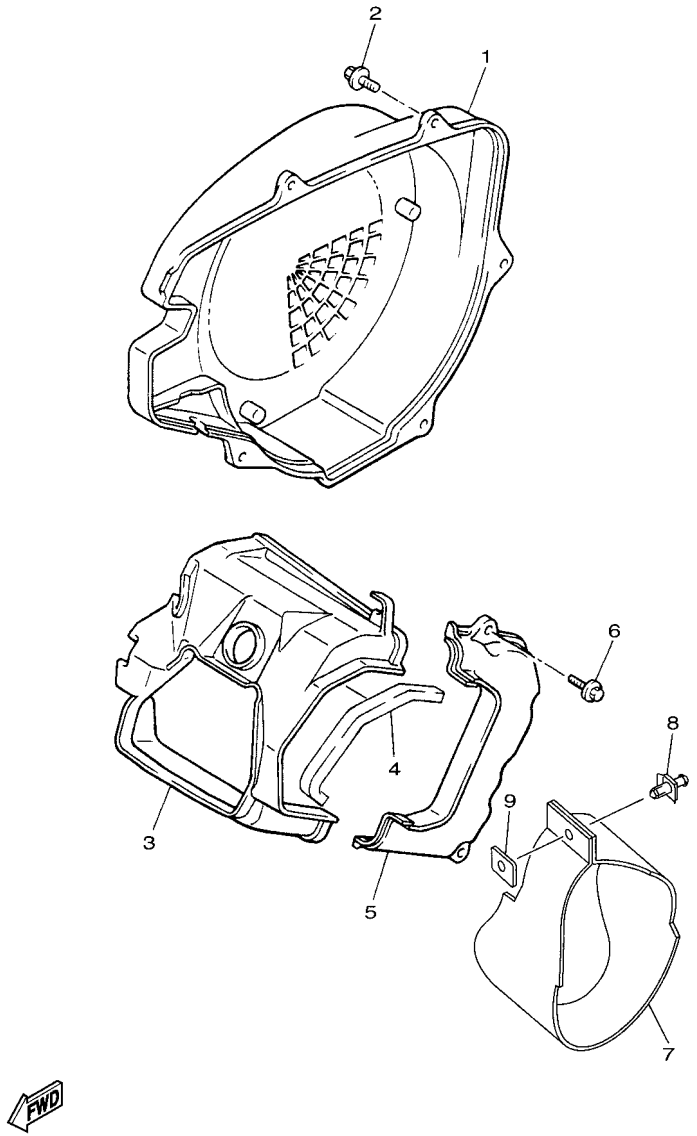

J0B1110-S040

FIG. 4 AIR SHROUD & FAN

REF. NO.	PART NO.	DESCRIPTION	J1J1					REMARKS
1	JN6–12621–02	CASE, FAN	1					
2	95802–06020	BOLT, FLANGE	4					
3	JN6–12651–01	AIR SHROUD, CYLINDER 1	1					
4	JR7–12658–00	DAMPER, AIR SHROUD 1	1					
5	JN6–12652–00	AIR SHROUD, CYLINDER 2	1					
6	95802–06020	BOLT, FLANGE	2					
7	J1J–E2691–00	DUCT 1	1					
8	90269–10001	RIVET	1					
9	J1J–E2634–00	PLATE 2	1					

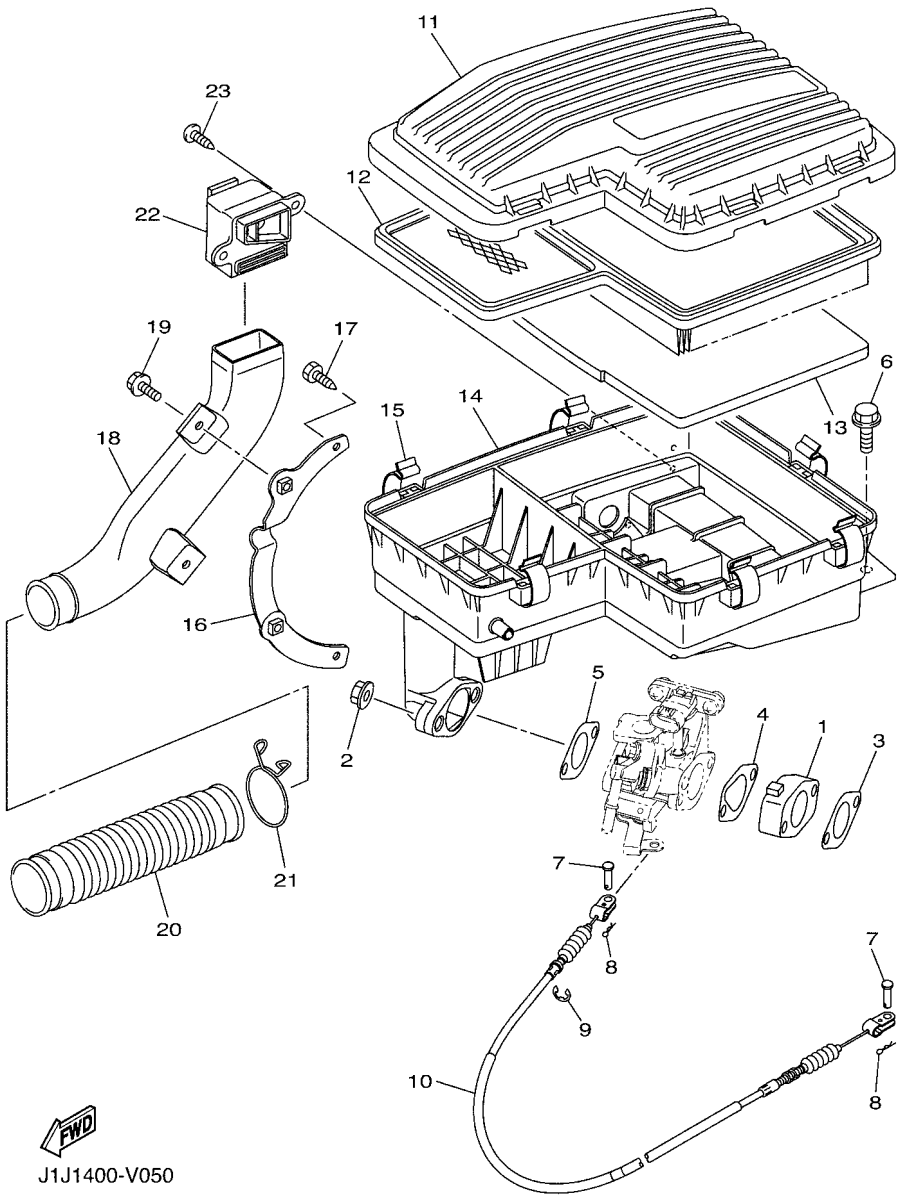

J1J1400-V050

FIG. 5 INTAKE 1

REF. NO.	PART NO.	DESCRIPTION	J1J1					REMARKS
1	JC0–13595–00	JOINT	1					
2	95702–08500	NUT, FLANGE	2					
3	JN6–13567–00	GASKET	1					
4	JC0–13567–00	GASKET	1					
5	JN6–13567–00	GASKET	1					
6	95D02–06016	BOLT, FLANGE DEEP RECESS	2					
7	91702–05010	PIN, CLEVIS	2					
8	90468–10049	CLIP	2					
9	99002–07600	CIRCLIP(E)	1					
10	J0B–F6312–00	CABLE, THROTTLE 2	1					
11	J0B–E4412–00	CAP, CLEANER CASE 1	1					
12	J0B–E4451–01	ELEMENT, AIR CLEANER	1					
13	JU0–E445E–00	FILTER 1	1					
14	J0B–E4411–01	CASE, AIR CLEANER 1	1					
15	3B4–14424–00	CLIP, CAP FITTING	7					
16	J1J–E4413–00	STAY	1					
17	97702–60416	SCREW, TAPPING	2					
18	J0B–E5471–00	DUCT, AIR	1					
19	90105–06057	BOLT, FLANGE	2					
20	J1J–E4437–00	DUCT	1					
21	90467–24140	CLIP	1					
22	J0B–E4453–01	JOINT, AIR CLEANER 1	1					
23	97702–50016	SCREW,TAPPING	2					

FIG. 6 INTAKE 2

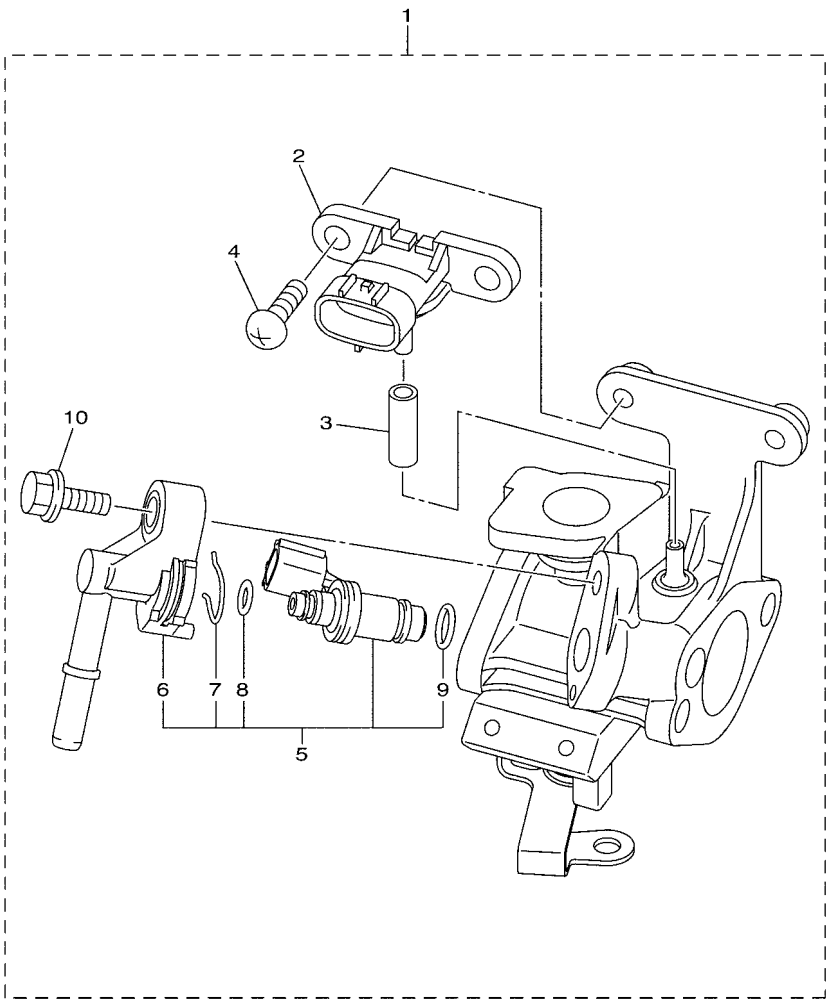

J0B1110-S061

REF. NO.	PART NO.	DESCRIPTION	J1J1					REMARKS
1	J0B–13750–01	THROTTLE BODY ASSY	1					
2	1C7–82380–00	.SENSOR, PRESSURE	1					
3	JC0–13542–01	.HOSE, VACUUM SENSING 1	1					
4	98502–06014	.SCREW, PAN HEAD	2					
5	J0B–13770–00	.INJECTOR ASSY	1					
6	52S–13938–00	..PIPE	1					
7	52B–14137–00	..CLIP	1					
8	52B–14147–00	..O-RING	1					
9	5CA–14147–00	..O-RING	1					
10	95812–06025	.BOLT, FLANGE	1					

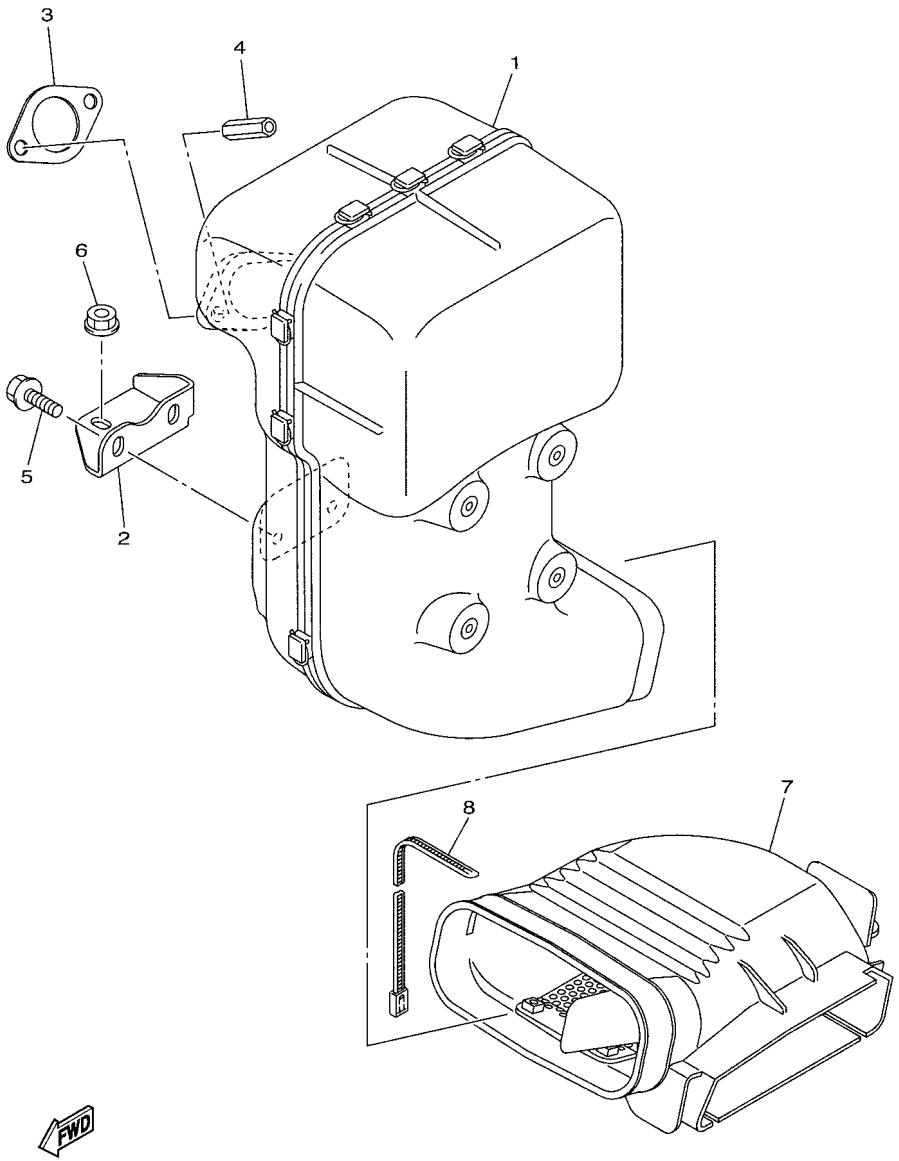

J0B4110-V080

FIG. 7 EXHAUST

REF. NO.	PART NO.	DESCRIPTION	J1J1					REMARKS
1	J0B–E4710–03	MUFFLER ASSY 1	1					
2	J1J–F1436–00	BRKT., MUFF. 2	1					
3	7KY–14613–01	GASKET, EXHAUST 1	1					
4	JW1–E4713–00	NUT, MUFFLER JOINT	2					
5	95D32–08020	BOLT, FLANGE DEEP RECESS	2					
6	95702–08500	NUT, FLANGE	1					
7	J0B–E4430–10	DUCT ASSY	1					
8	90464–09823	CLAMP	1					

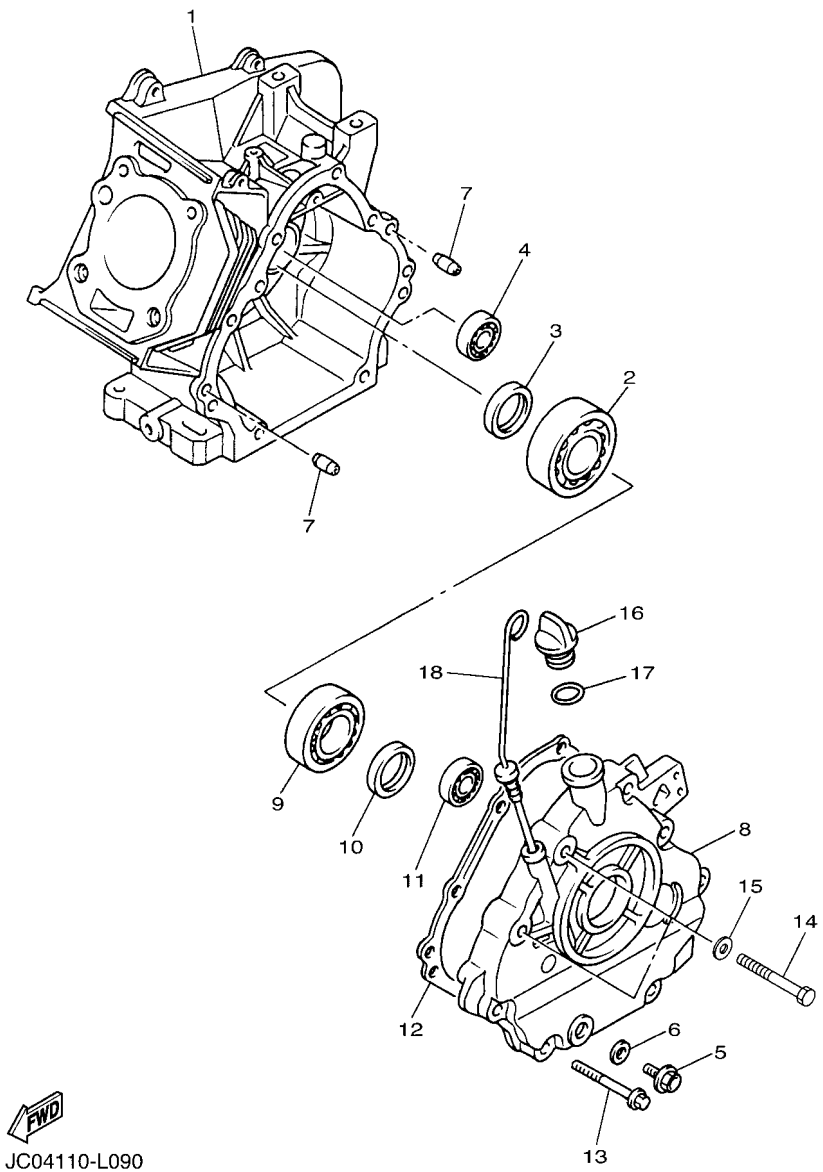

FIG. 8 CRANKCASE

REF. NO.	PART NO.	DESCRIPTION	J1J1					REMARKS
1	JC0–15111–01	CRANKCASE 1	1					
2	93306–30709	BEARING	1					
3	93102–35014	OIL SEAL	1					
4	93306–20201	BEARING	1					
5	90340–12097	PLUG, STRAIGHT SCREW	1					
6	812–11198–00	GASKET	1					
7	99530–08016	PIN, DOWEL	2					
8	JN6–15411–10	COVER, CRANKCASE 1	1					
9	93306–20714	BEARING	1					
10	93102–35014	OIL SEAL	1					
11	93306–20201	BEARING	1					
12	JY2–15451–00	GASKET, CRANKCASE COVER 1	1					
13	95812–08045	BOLT, FLANGE	6					
14	97012–10050	BOLT	2					
15	90201–10057	WASHER, PLATE	2					
16	796–15363–01	PLUG, OIL	1					
17	93210–22344	O-RING	1					
18	J38–15361–00	GAUGE, LEVEL	1					

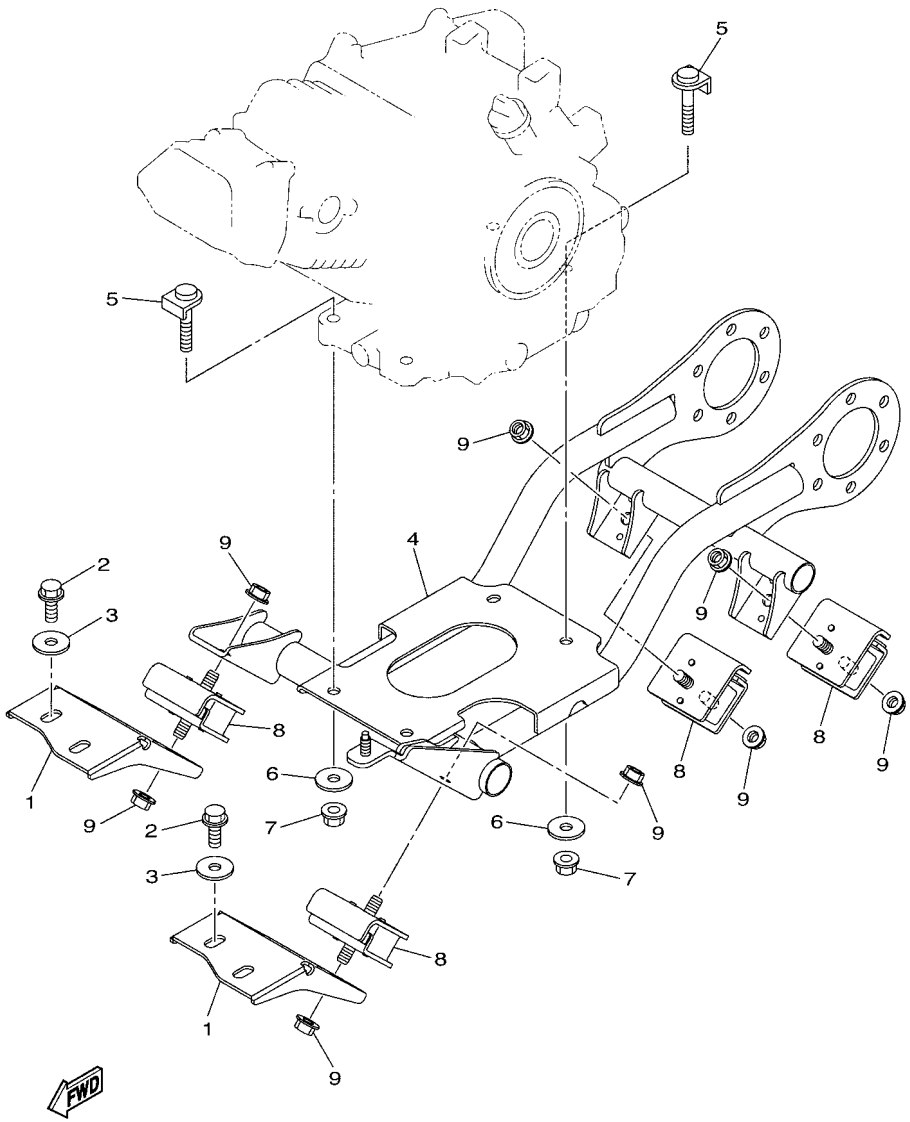

J1J1400-V090

FIG. 9 ENGINE BRACKET

REF. NO.	PART NO.	DESCRIPTION	J1J1					REMARKS
1	J1J–F1411–00	BRACKET, ENGINE 1	2					
2	95812–10020	BOLT, FLANGE	4					
3	90201–10072	WASHER, PLATE	4					
4	J1J–F1419–00	BRACKET, ENGINE 2	1					
5	JT0–21481–00	BOLT, ENGINE MOUNTING 1	4					
6	92902–10200	WASHER	4					
7	95602–10200	NUT, S/L FLANGE	4					
8	J0B–F1485–00	DAMPER, RUBBER 1	4					
9	95602–10200	NUT, S/L FLANGE	8					

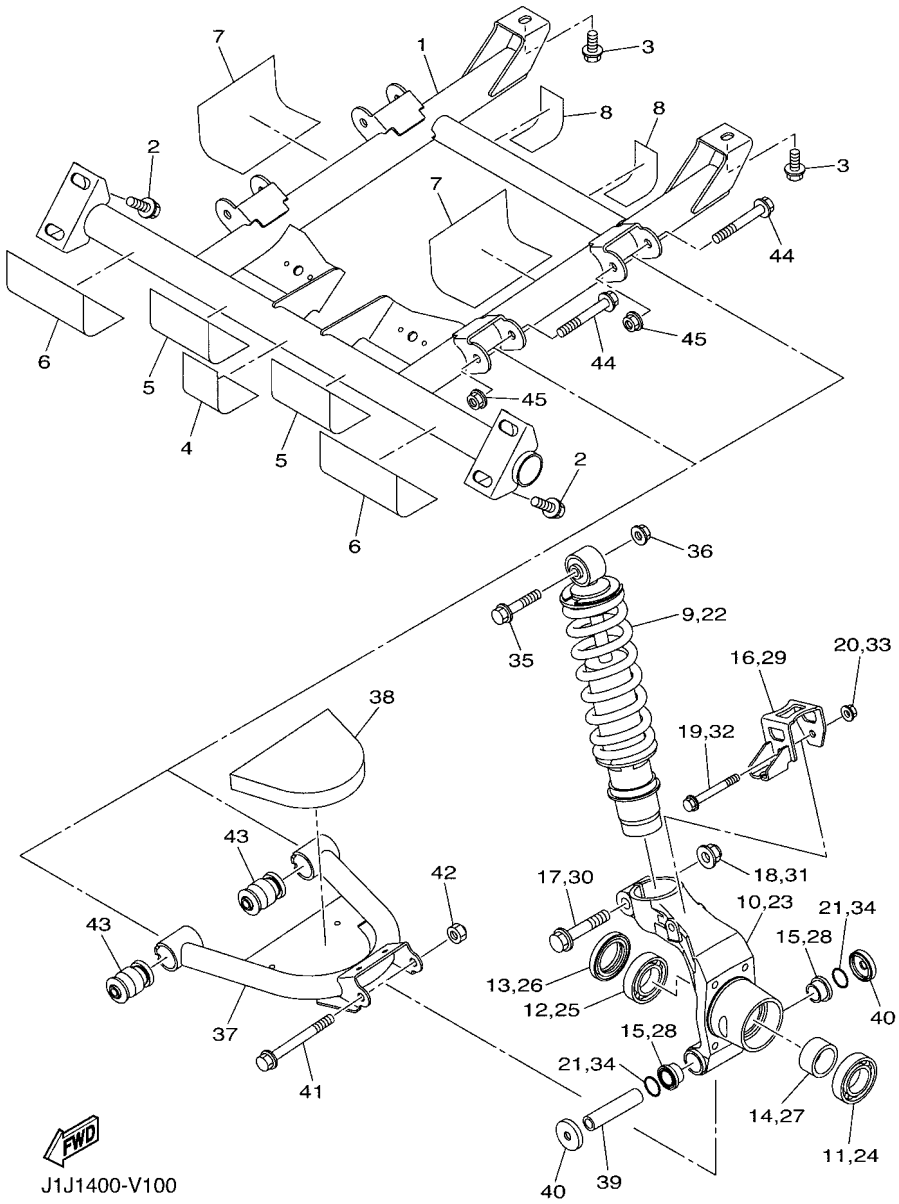

J1J1400-V100

FIG. 10 REAR ARM & SUSPENSION

REF. NO.	PART NO.	DESCRIPTION	J1J1					REMARKS
1	J1J–F2110–00	REAR ARM COMP.	1					
2	95812–10016	BOLT, FLANGE	4					
3	95812–10020	BOLT, FLANGE	2					
4	J1J–F8218–00	SEAL 1	1					
5	J1J–F8228–00	SEAL 2	2					
6	J1J–F8238–00	SEAL 3	2					
7	J1J–F8268–00	SEAL 4	2					
8	J1J–F8278–00	SEAL 5	2					
9	J0B–F2210–00	SHOCK ABSORBER ASSY, REAR	1					
10	J0B–F53A1–01	KNUCKLE, REAR	1					
11	93306–006Y9	BEARING	1					
12	93306–006Y4	BEARING	1					
13	93106–38803	OIL SEAL	1					
14	90387–30800	COLLAR	1					
15	90381–17803	BUSH, SOLID	2					
16	J1J–F537W–00	BRACKET 1	1					
17	95812–12055	BOLT, FLANGE	1					
18	95602–12200	NUT, SELF-LOCKING	1					
19	95812–08060	BOLT, FLANGE	1					
20	95702–08500	NUT, FLANGE	1					
21	93210–19001	O-RING	2					
22	J0B–F2210–00	SHOCK ABSORBER ASSY, REAR	1					
23	J0B–F53A1–01	KNUCKLE, REAR	1					
24	93306–006Y9	BEARING	1					
25	93306–006Y4	BEARING	1					
26	93106–38803	OIL SEAL	1					
27	90387–30800	COLLAR	1					

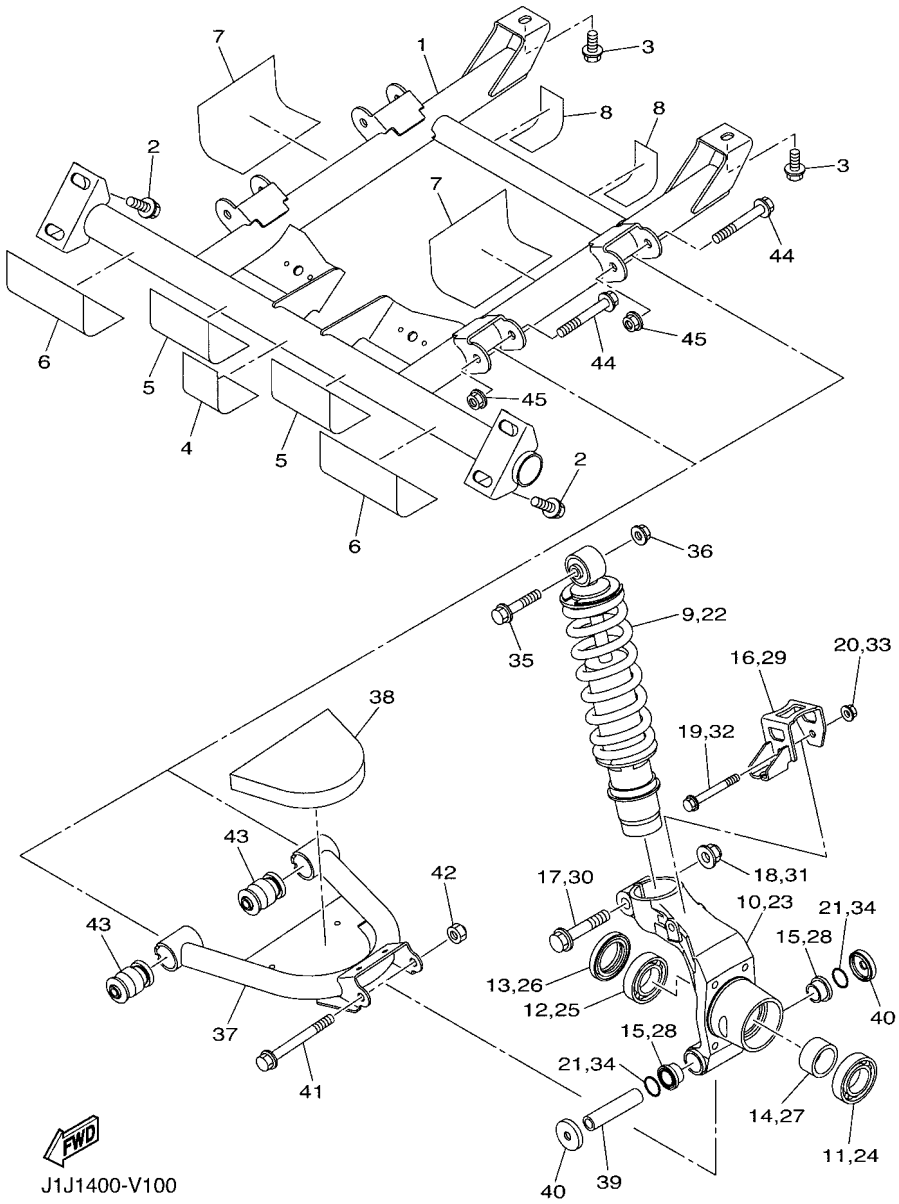

FIG. 10 REAR ARM & SUSPENSION

REF. NO.	PART NO.	DESCRIPTION	J1J1					REMARKS
28	90381–17803	BUSH, SOLID	2					
29	J1J–F537W–00	BRACKET 1	1					
30	95812–12055	BOLT, FLANGE	1					
31	95602–12200	NUT, SELF-LOCKING	1					
32	95812–08060	BOLT, FLANGE	1					
33	95702–08500	NUT, FLANGE	1					
34	93210–19001	O-RING	2					
35	95812–10055	BOLT, FLANGE	2					
36	95602–10200	NUT, S/L FLANGE	2					
37	J0B–F2171–01	ARM, REAR 1	2					
38	J0B–K8254–00	PAD, SILENCER 4	2					
39	90387–10868	COLLAR	2					
40	93102–28805	OIL SEAL	4					
41	90105–10185	BOLT, FLANGE	2					
42	90185–10012	NUT, SELF-LOCKING	2					
43	2HR–23526–00	BUSH	4					
44	90105–10267	BOLT, FLANGE	4					
45	95602–10200	NUT, S/L FLANGE	4					

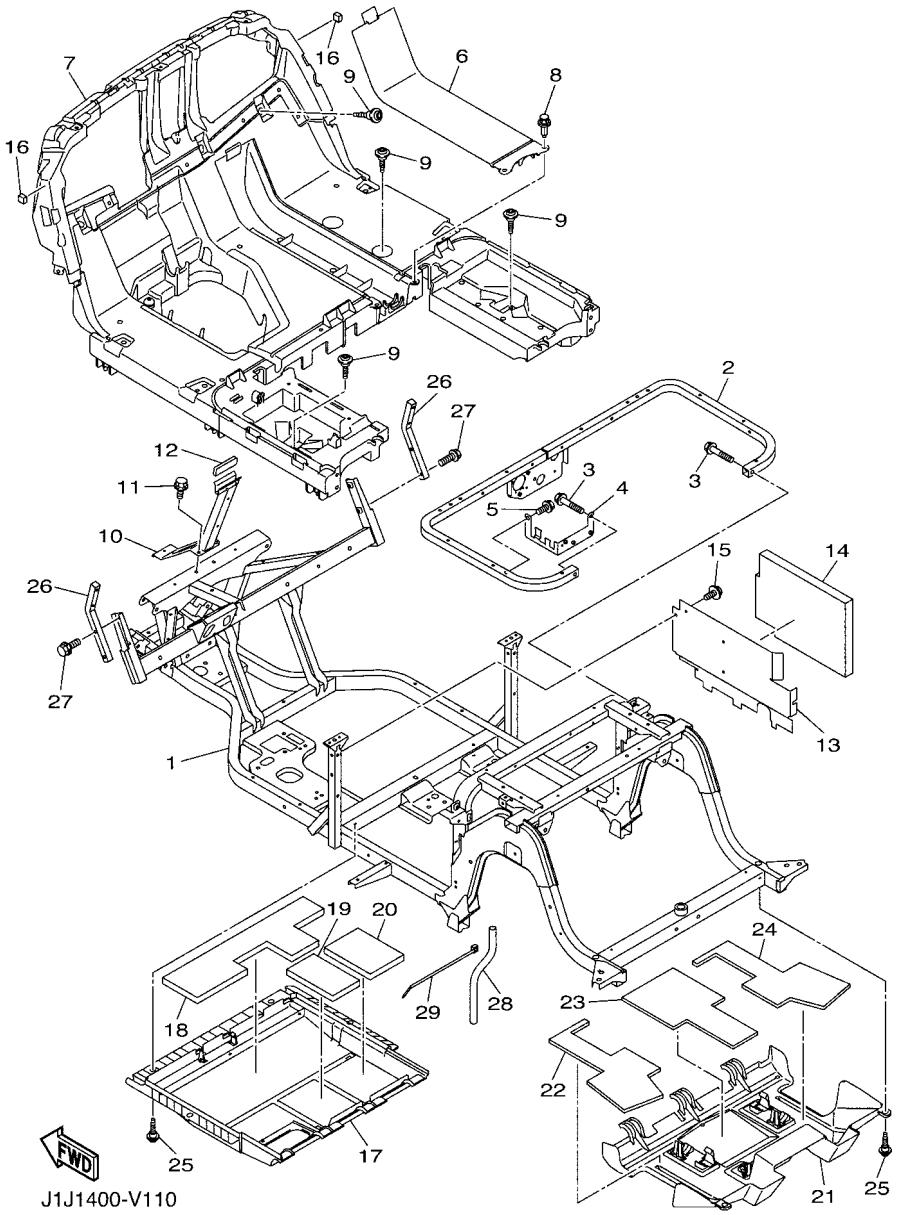

FIG. 11 FRAME

REF. NO.	PART NO.	DESCRIPTION	J1J1					REMARKS
1	J1J–F2501–00	FRAME COMP.	1					
2	J1J–F255G–00	MEMBER, SEAT SUPPORT	1					
3	95812–08040	BOLT, FLANGE	2					
4	J1J–F253B–00	STAY, RELAY	1					
5	95D32–08016	BOLT, FLANGE DEEP RECESS	1					
6	J0B–F7413–01	COVER, FOOTREST	1					
7	J0D–F7411–01	FOOTREST 1	1					
8	90269–09003	RIVET	2					
9	J0B–F1738–00	BOLT	9					
10	J1B–F258E–00	SUPPORT, FRONT COWL	1					
11	95D32–08016	BOLT, FLANGE DEEP RECESS	2					
12	J1B–F2127–00	SHIM	1					
13	J1J–F258R–00	PLATE, BATTERY 3	1					
14	J1J–K8252–00	PAD, SILENCER 2	1					
15	95D32–08016	BOLT, FLANGE DEEP RECESS	2					
16	J1B–K821A–00	PAD, BODY MOUNTING1	2					
17	J0B–F3123–10	COVER, UNDER 1	1					
18	J0B–K8256–00	PAD, SILENCER 6	1					
19	J0B–K8257–00	PAD, SILENCER 7	1					
20	J0B–K8258–00	PAD, SILENCER 8	1					
21	J0B–F3133–10	COVER, UNDER 2	1					
22	J0B–K8259–00	PAD, SILENCER 9	1					
23	J0B–K825A–00	PAD, SILENCER 10	1					
24	J0B–K825E–00	PAD, SILENCER 11	1					
25	J0B–F1738–00	BOLT	6					
26	J1B–K816M–00	SUPPORT, HOLDER	2					
27	95D32–08030	BOLT, FLANGE DEEP RECESS	4					

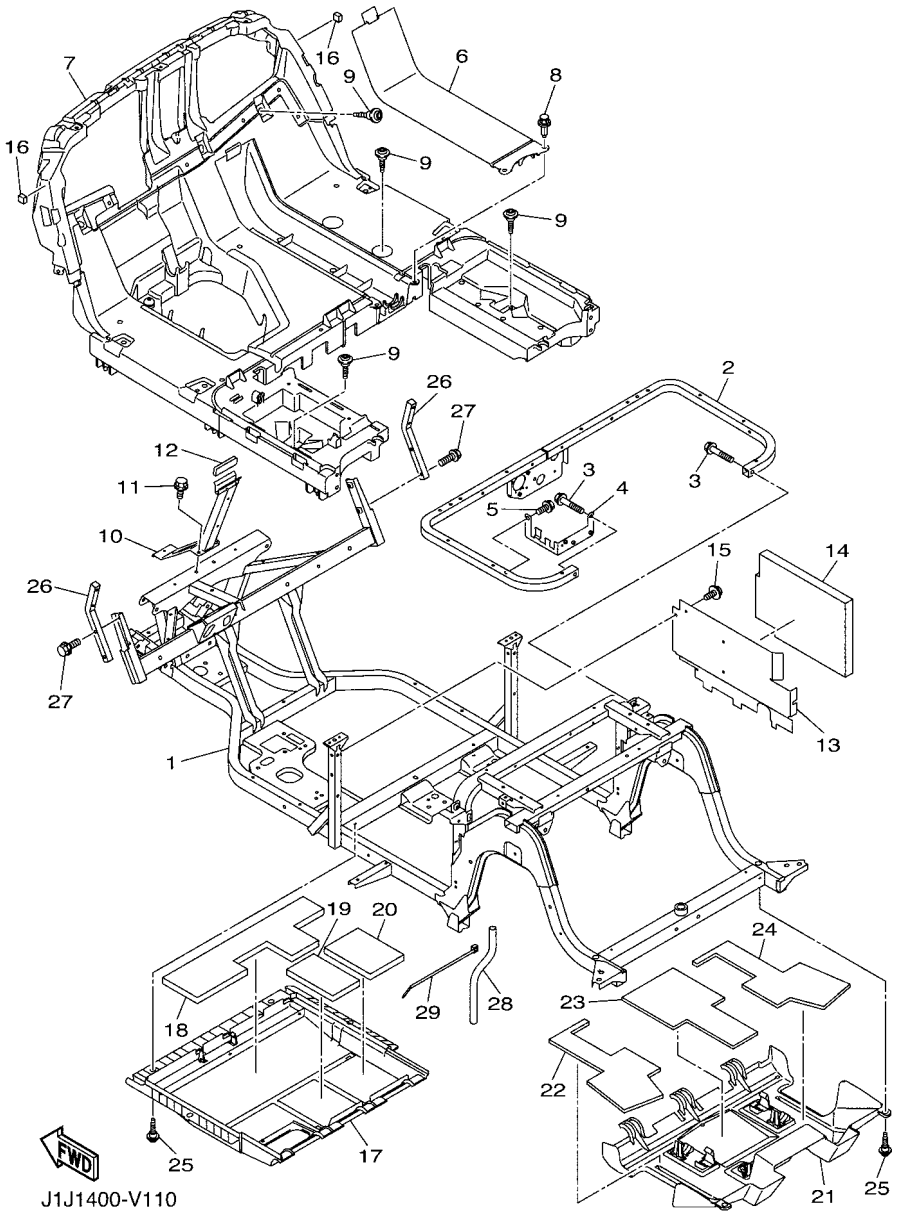

FIG. 11 FRAME

REF. NO.	PART NO.	DESCRIPTION	J1J1					REMARKS
28	J0B–F125J–00	PIPE, DRAIN	2					
29	90464–70803	CLAMP	2					

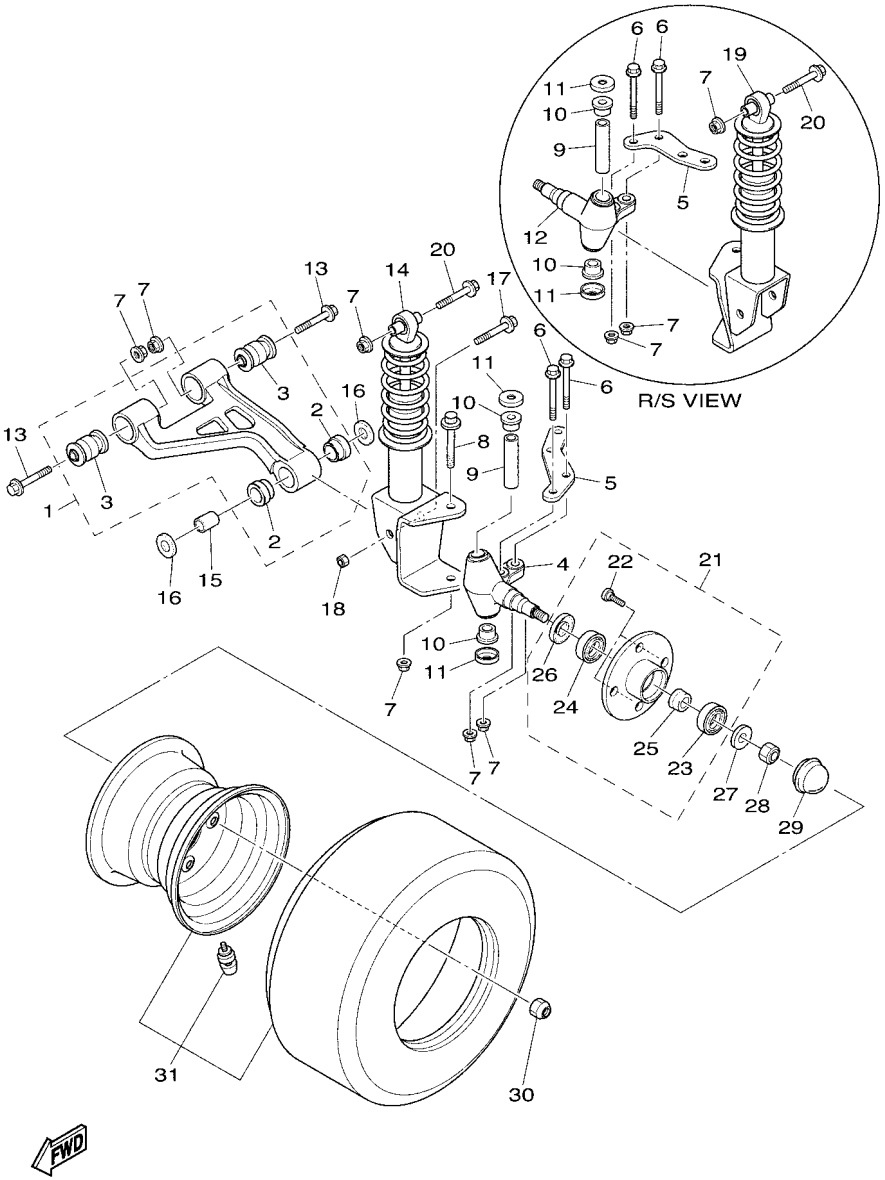

J1J1400-V120

FIG. 12 FRONT SUSPENSION & WHEEL

REF. NO.	PART NO.	DESCRIPTION	J1J1					REMARKS
1	J1A–F3570–00	FRONT LOWER ARM COMP. (LEFT)	2					
2	90381–18001	.BUSH, SOLID	2					
3	2HR–23526–00	.BUSH	2					
4	J1A–F3511–00	KNUCKLE, STEERING 1	1					
5	J1A–F3512–00	ARM, KNUCKLE 1	2					
6	90105–10373	BOLT, FLANGE	4					
7	95602–10200	NUT, S/L FLANGE	12					
8	90105–10219	BOLT, FLANGE	2					
9	2NL–23448–00	SPACER	2					
10	90381–17800	BUSH, SOLID	4					
11	2NL–23517–00	COVER, THRUST 1	4					
12	J1A–F3521–00	KNUCKLE, STEERING 2	1					
13	90105–10267	BOLT, FLANGE	4					
14	J0B–F3350–00	SHOCK ABSORBER ASSY	1					
15	90387–12016	COLLAR	2					
16	J1A–F2128–00	COVER, THRUST 1	4					
17	95812–12080	BOLT, FLANGE	2					
18	95612–12100	NUT, U	2					
19	J0B–F3390–00	SHOCK ABSORBER ASSY 2	1					
20	90105–10267	BOLT, FLANGE	2					
21	J1A–F5103–00	HUB BEARING UNIT ASSY	2					
22	90114–12004	.BOLT, SERRATION	4					
23	93306–204X0	.BEARING	1					
24	93306–005Y3	.BEARING	1					
25	90387–21801	.COLLAR	1					
26	93102–30803	.OIL SEAL	1					
27	90209–32271	WASHER	2					

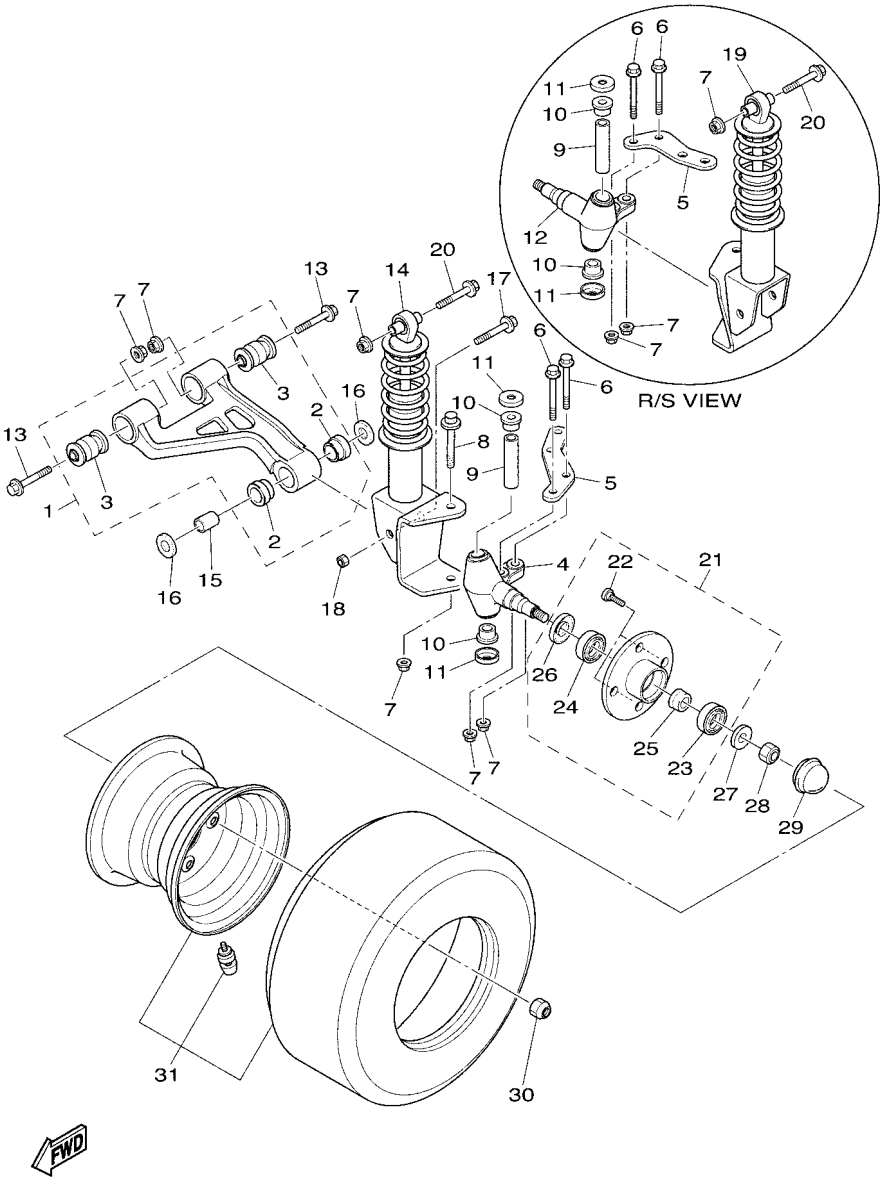

J1J1400-V120

FIG. 12 FRONT SUSPENSION & WHEEL

REF. NO.	PART NO.	DESCRIPTION	J1J1					REMARKS
28	95602–14100	NUT, U	2					
29	J1A–F5118–00	COVER, HUB DUST	2					
30	90179–12262	NUT	8					
31	J1B–F5100–00	WHEEL ASSY (18X8.50-8-4PR)	2					

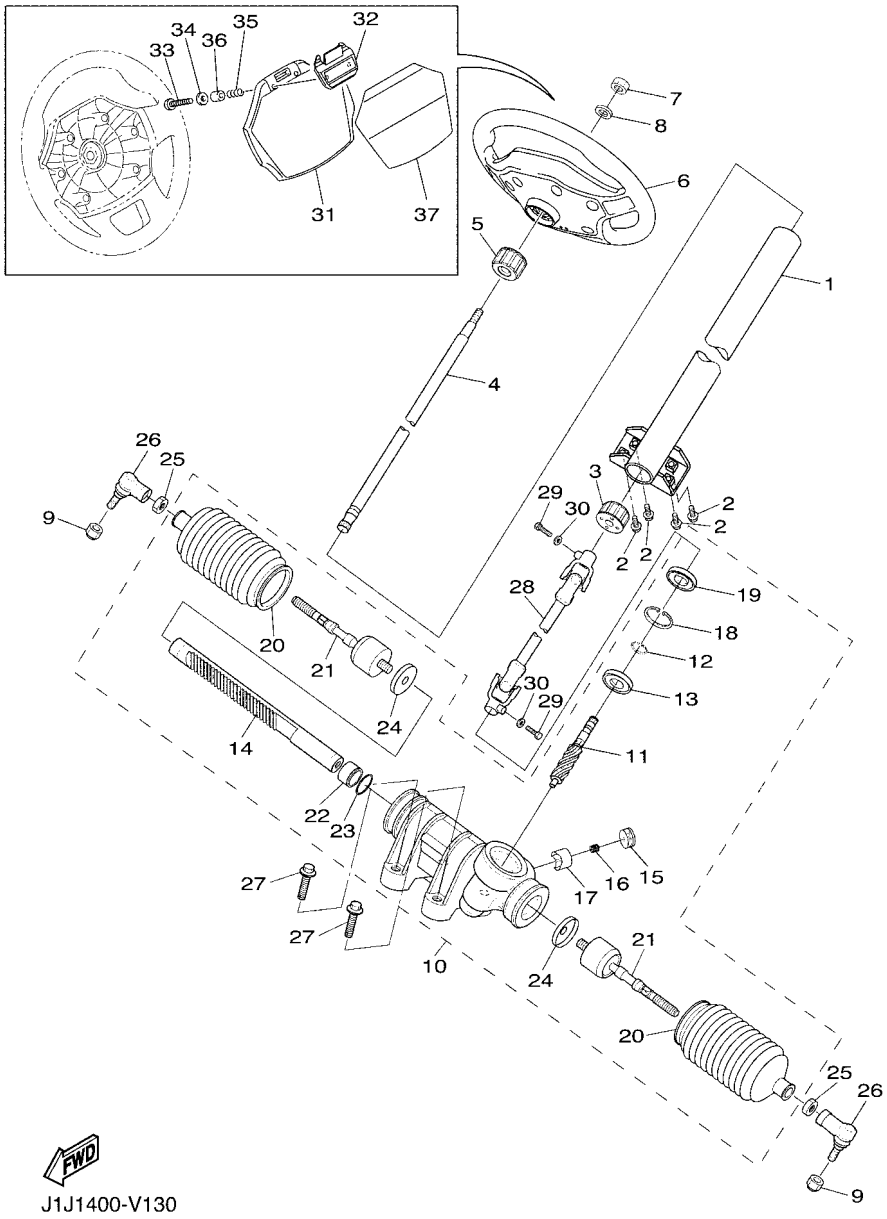

J1J1400-V130

FIG. 13 STEERING

REF. NO.	PART NO.	DESCRIPTION	J1J1					REMARKS
1	J1A–F3811–00	COLUMN, STEERING	1					
2	95812–08020	BOLT, FLANGE	4					
3	JU0–F3857–20	HOLDER	1					
4	J1A–F3828–00	ROD, STEERING	1					
5	JU0–F3857–20	HOLDER	1					
6	J0B–F3838–00	WHEEL, STEERING	1					
7	90185–12008	NUT, SELF-LOCKING	1					
8	92902–12200	WASHER	1					
9	95602–12200	NUT, SELF-LOCKING	2					
10	J1A–23400–02	STEERING ASSY	1					
11	J1A–2387A–00	.GEAR,PINION	1					
12	JX4–2384N–00	.CLIP, RING	1					
13	JX4–23812–01	.BEARING, STEERING	1					
14	J1A–2387E–00	.GEAR, RACK	1					
15	JR7–2387G–00	.COVER, ADJUST	1					
16	JR7–2387K–00	.SPRING, PRESSURE	1					
17	JR7–2387F–00	.PAD, PRESSURE	1					
18	JR7–2387J–00	.RING, STOPPER	1					
19	JR7–23844–00	.SEAL	1					
20	J1A–23527–01	.SEAL, DUST 1	2					
21	J1A–23837–00	.ROD, TIE 2	2					
22	JR7–2467K–00	.BUSH CAP	1					
23	JR7–23866–00	.RING, SNAP	1					
24	JR7–23894–00	.WASHER, LOCK 1	2					
25	1P0–F3833–00	NUT 1	2					
26	J1A–F3841–00	JOINT, UNIVERSAL 1	2					
27	95812–10040	BOLT, FLANGE	4					

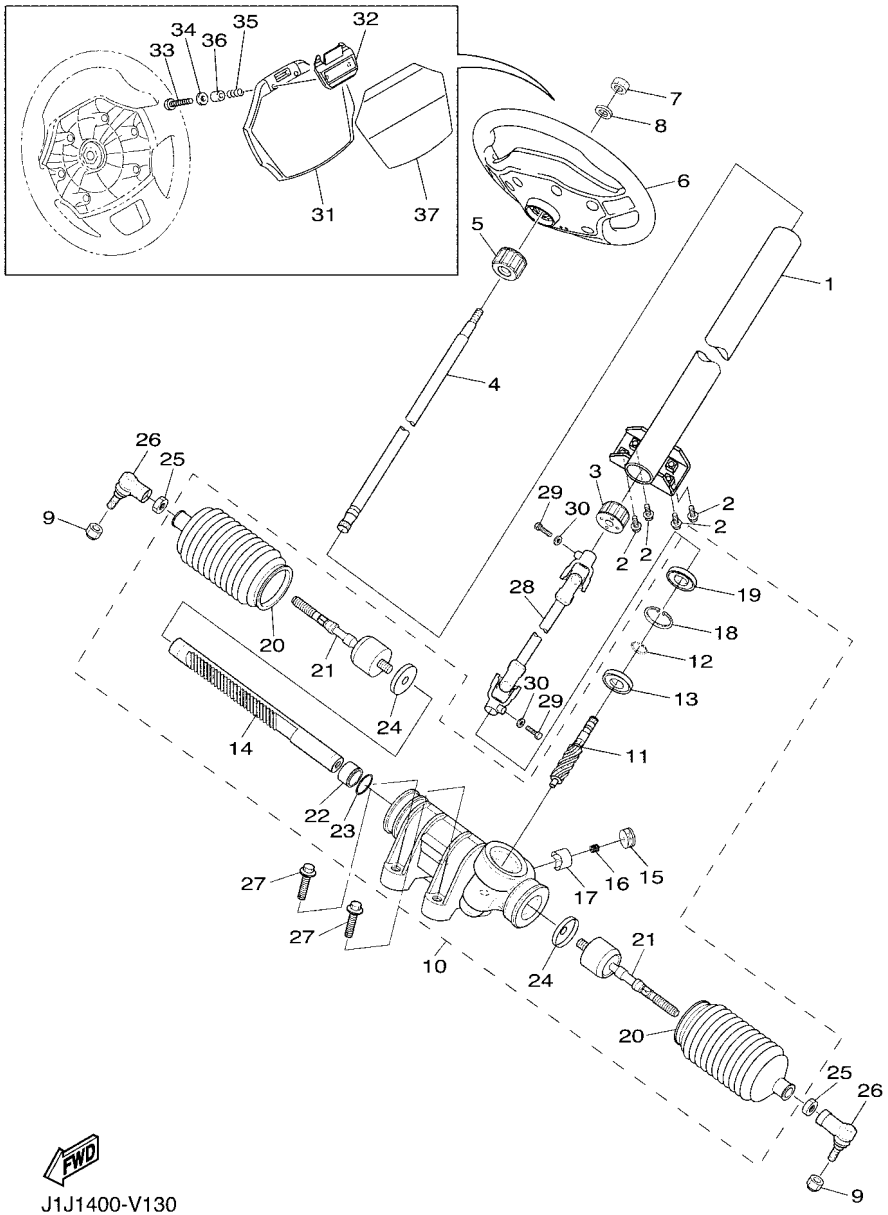

J1J1400-V130

FIG. 13 STEERING

REF. NO.	PART NO.	DESCRIPTION	J1J1					REMARKS
28	J1A–23822–00	JOINT 1	1					
29	97012–08030	BOLT	2					
30	92902–08600	WASHER, PLATE	2					
31	J0B–K8357–00	HOLDER 1	1					
32	J0B–K8358–00	HOLDER 2	1					
33	J0B–K7387–00	SCREW	2					
34	90201–04810	WASHER, PLATE	2					
35	J0B–K7363–00	SPRING	2					
36	J0B–K7115–00	COLLAR	2					
37	J1K–K7762–10	LABEL, WARNING 2	1					UR ENGLISH/FRENCH
	J1K–K7762–20	LABEL, WARNING 2	1					UR GERMAN/SPANISH

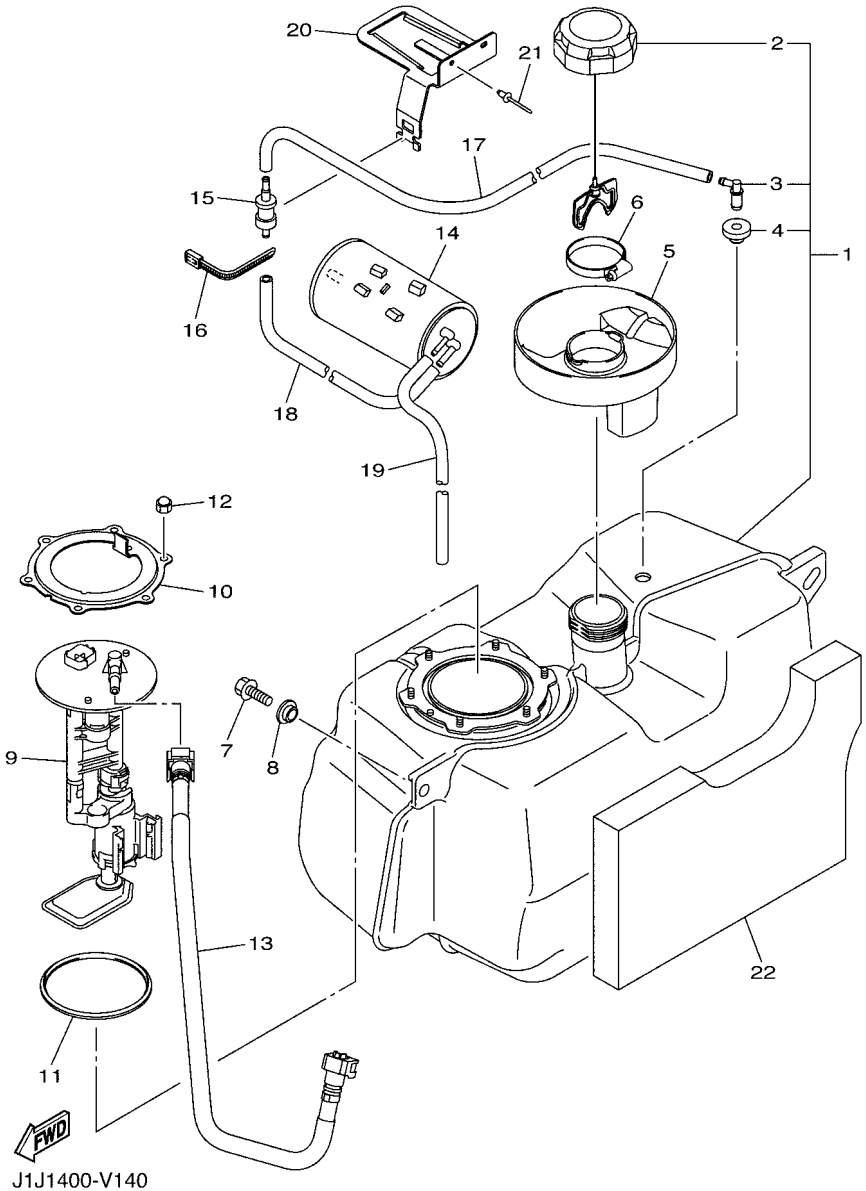

J1J1400-V140

FIG. 14 FUEL TANK

REF. NO.	PART NO.	DESCRIPTION	J1J1					REMARKS
1	JC0–F4111–02	TANK, FUEL	1					
2	JW1–F4610–11	.CAP ASSY	1					
3	JW1–F4112–00	.PIPE	1					
4	JU5–F4375–00	.GROMMET	1					
5	J0B–F4217–00	COVER	1					
6	90450–56802	HOSE CLAMP ASSY	1					
7	95817–08025	BOLT, FLANGE	2					
8	90387–08116	COLLAR	2					
9	J0B–13907–01	FUEL PUMP COMP.	1					
10	J1J–F4491–00	BRACKET, FUEL PUMP	1					
11	1S3–24486–00	O-RING	1					
12	95302–06800	NUT, CROWN	6					
13	J0B–13971–01	PIPE, FUEL 1	1					
14	7CC–F4170–10	CANISTER ASSY	1					
15	4WM–24180–00	ROLL OVER VALVE ASSY	1					
16	90464–45804	CLAMP	1					
17	J1J–F4314–00	PIPE 4	1					
18	J1J–F4316–00	PIPE 6	1					
19	J1J–F4317–00	PIPE 7	1					
20	J1J–F419A–00	HOLDER	1					
21	JW7–K7329–00	RIVET	2					
22	J1J–K8253–00	PAD, SILENCER 3	1					

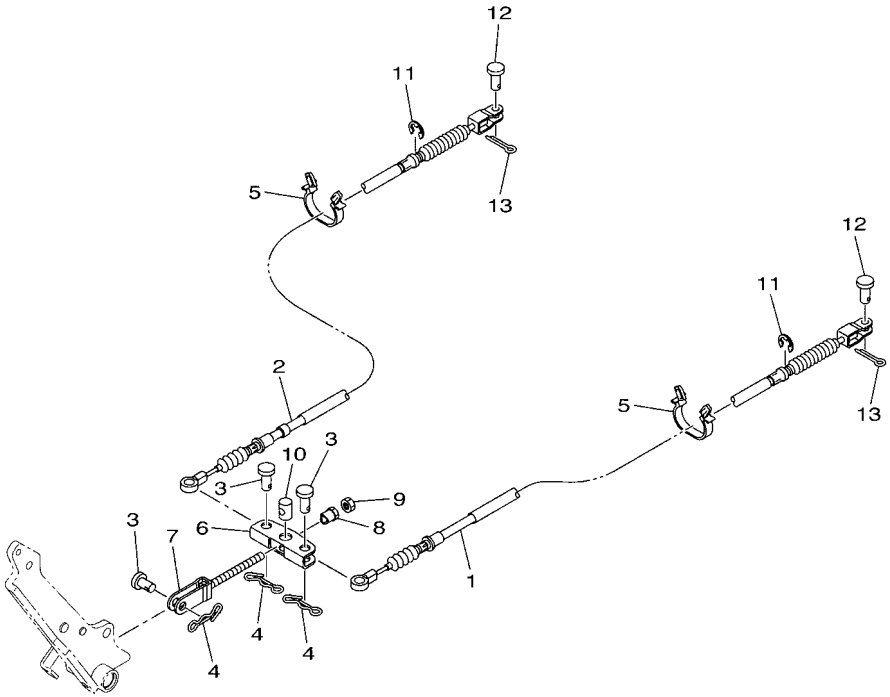

J1J1400-V150

FIG. 15 PEDAL WIRE

REF. NO.	PART NO.	DESCRIPTION	J1J1					REMARKS
1	J1J–F6341–00	WIRE, BRAKE 1	1					
2	J1J–F6351–00	CABLE, BRAKE	1					
3	91702–10026	PIN, CLEVIS	3					
4	90468–20196	CLIP	3					
5	90464–24230	CLAMP	4					
6	J1A–F5681–00	EQUALIZER, BRAKE	1					
7	J1A–F5685–00	ROD	1					
8	90179–08261	NUT	1					
9	95307–08700	NUT	1					
10	90249–14129	PIN	1					
11	99002–09600	CIRCLIP	2					
12	91702–08018	PIN, CLEVIS	2					
13	91490–25015	PIN. COTTER	2					

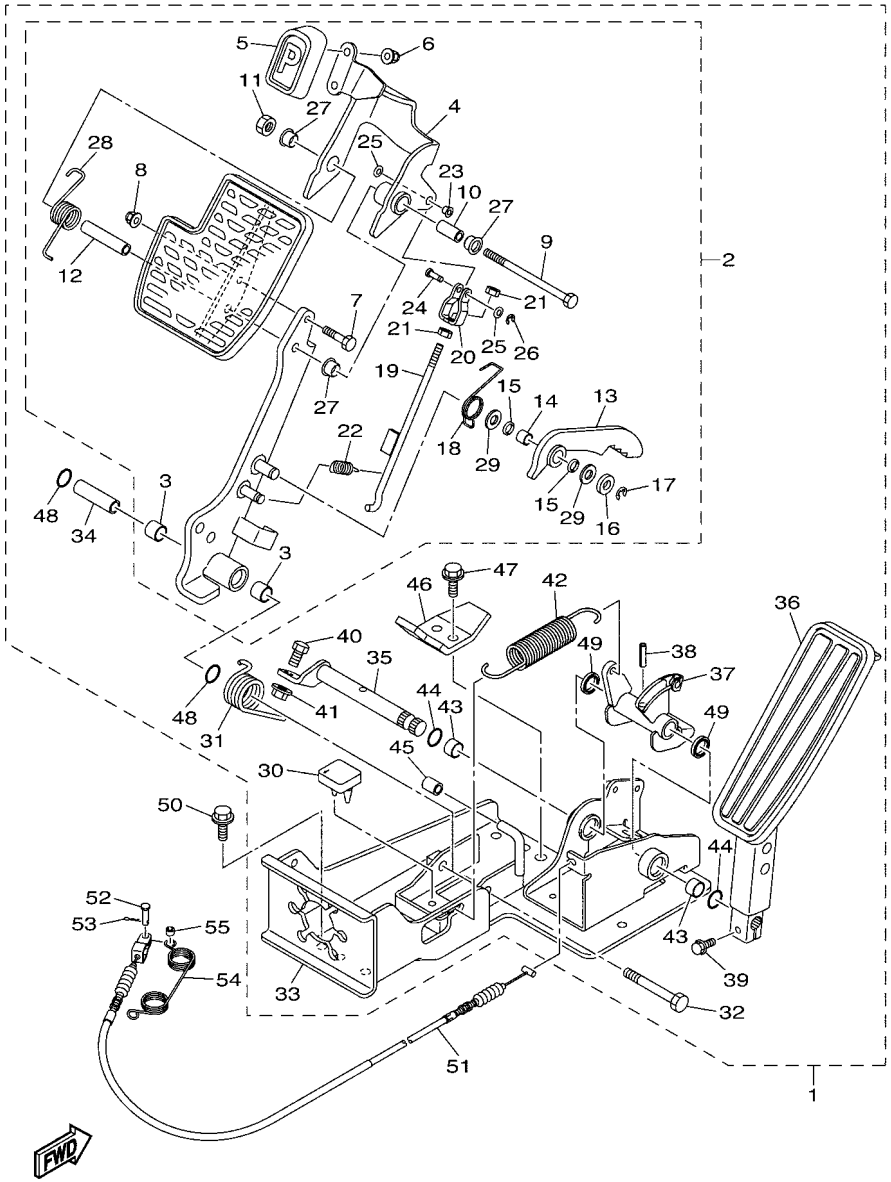

FIG. 16 PEDAL ASSEMBLY

REF. NO.	PART NO.	DESCRIPTION	J1J1					REMARKS
1	J0G–F7850–20	PEDAL ASSY (L.H)	1					
2	J0G–F7200–02	.PEDAL, BRAKE	1					
3	JW8–F7814–21	..BUSH, PEDAL	2					
4	J0G–F5671–00	..PEDAL, PARKING BRAKE	1					
5	J0G–F7854–00	..COVER, PEDAL	1					
6	95607–06200	..NUT, SELF U-FLANGE	2					
7	97012–06020	..BOLT	1					
8	JW8–F8363–00	..NUT	1					
9	J0G–F7416–00	..BOLT, FOOTREST	1					
10	JW8–F639N–00	..COLLAR	1					
11	J0G–F7218–00	..NUT	1					
12	J0G–F7313–00	..COLLAR	1					
13	JW9–F5666–00	..SECTOR, PARKING BRAKE	1					
14	JW8–F7121–00	..BUSH	1					
15	JW9–F7221–00	..SEAL, SHAFT	2					
16	JW8–F7322–00	..WASHER	1					
17	JW8–F3183–00	..CIRCLIP	1					
18	JW8–F7426–01	..SPRING, RETURN	1					
19	JW9–F7231–10	..ROD, BRAKE	1					
20	JW9–F7232–00	..END, ROD 2	1					
21	JW8–F7318–00	..NUT	2					
22	JW8–F6314–00	..SPRING	1					
23	J0G–F7814–00	..BUSH, PEDAL	1					
24	JW9–F7228–00	..PIN, JOINT	1					
25	JW8–F8323–00	..WASHER, LEG SHIELD	2					
26	JW8–F5415–00	..CIRCLIP	1					
27	90386–12800	..BUSH	3					

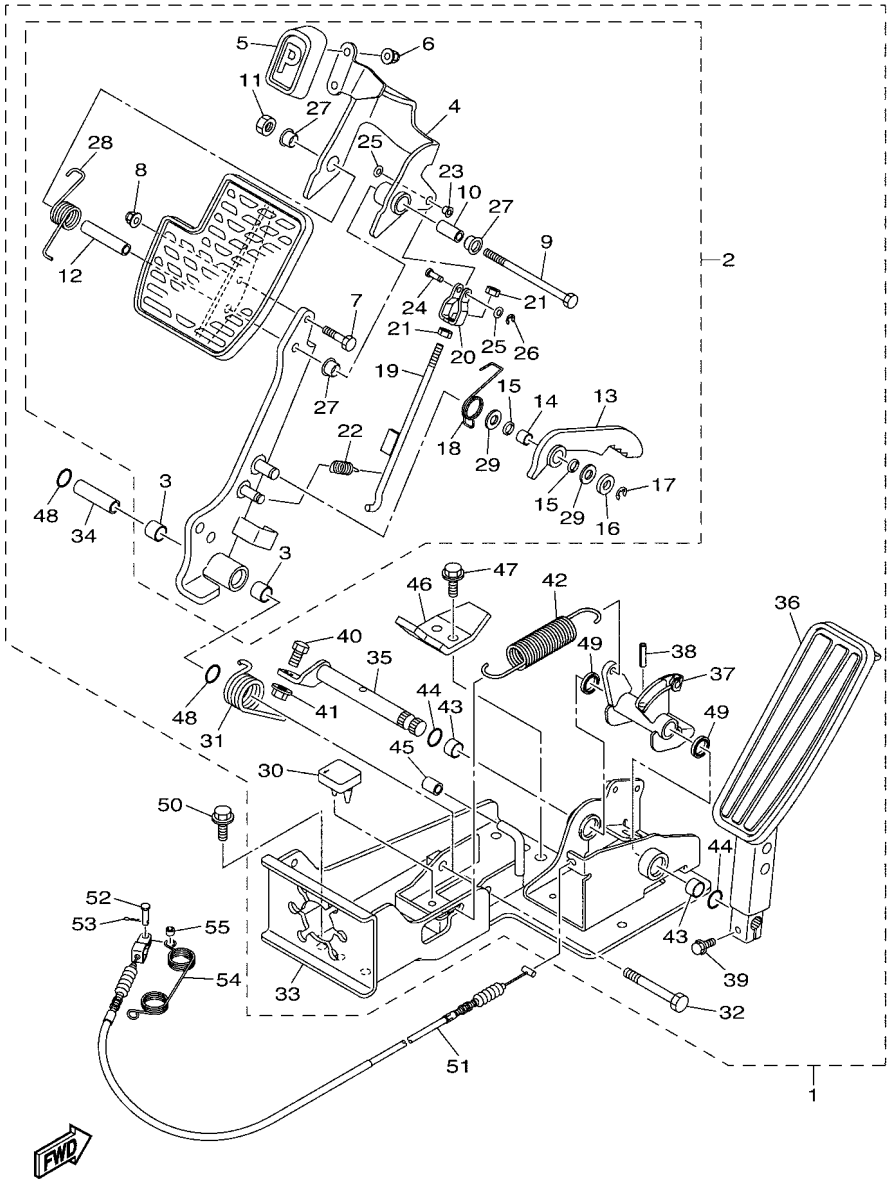

J0B4110-V170

FIG. 16 PEDAL ASSEMBLY

REF. NO.	PART NO.	DESCRIPTION	J1J1					REMARKS
28	J0G–F7825–00	..SPRING, RETURN	1					
29	JW8–F7119–00	..WASHER	2					
30	JW9–F7245–10	.PAD, BRAKE PEDAL	1					
31	JW8–F7316–01	.SPRING, SIDE STAND	1					
32	JW8–F7217–00	.BOLT	1					
33	J0G–F7445–10	.PLATE 1	1					
34	JW8–F7213–20	.COLLAR	1					
35	J0G–F7853–10	.SHAFT, PEDAL 1	1					
36	J0G–F7871–01	.PEDAL, ACCELERATOR	1					
37	J0G–F7872–00	.ARM, ACCELERATOR PEDAL	1					
38	JW8–F7438–00	.PIN, CLEVIS	1					
39	JW8–F7434–00	.BOLT	1					
40	JW8–F7317–00	.BOLT	1					
41	JW8–F7118–00	.NUT	1					
42	J0G–F815H–10	.SPRING	1					
43	J0G–F5922–00	.WASHER	2					
44	JW8–F4486–00	.O-RING	2					
45	JW9–F5673–00	.DAMPER, BRAKE	1					
46	JW9–F7246–20	.NAIL, BRAKE	1					
47	JW8–F8331–00	.BOLT, LEG SHIELD	2					
48	JW8–F4486–00	.O-RING	2					
49	J0G–F3145–00	.OIL SEAL	2					
50	95812–08020	BOLT, FLANGE	6					
51	J0B–F6311–01	WIRE, THROTTLE 1	1					
52	91702–05014	PIN, CLEVIS	1					
53	90468–10049	CLIP	1					
54	90508–16460	SPRING, TORSION	1					

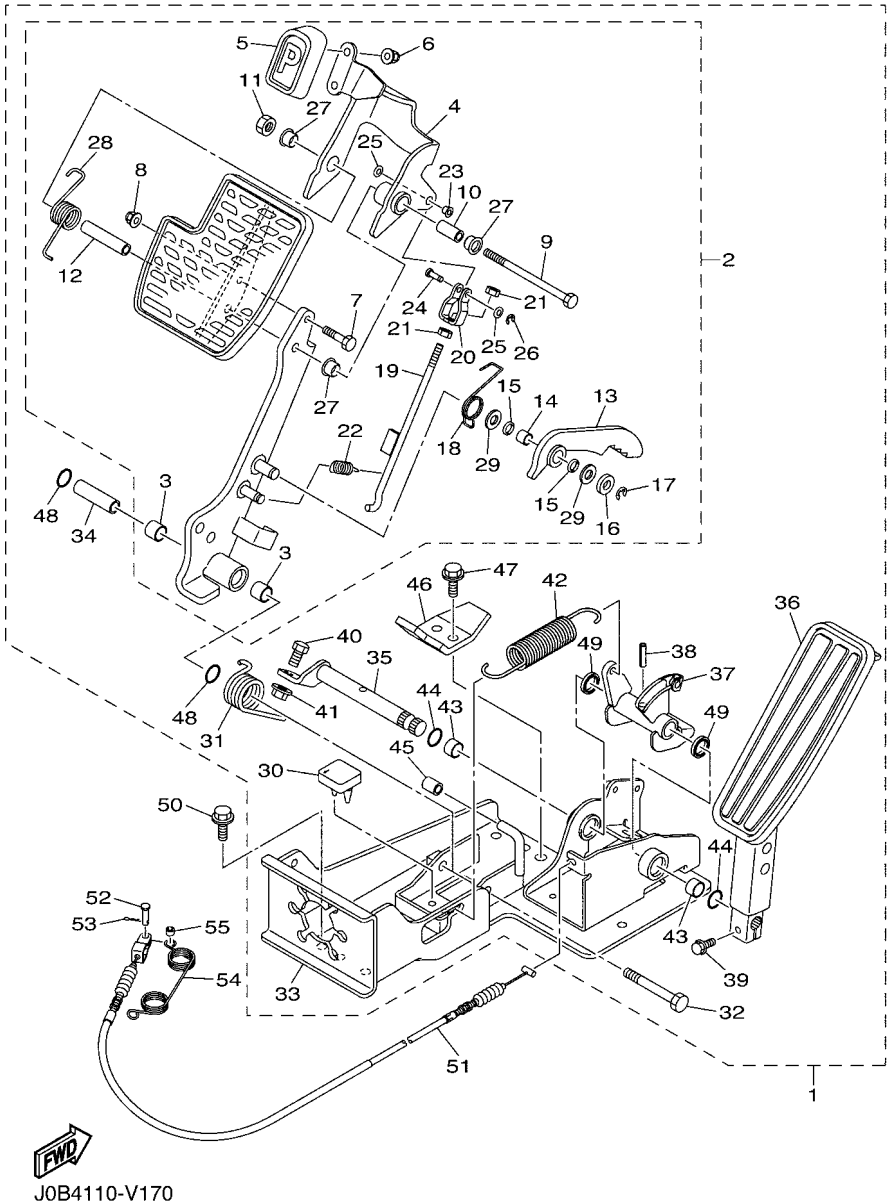

J0B4110-V170

FIG. 16 PEDAL ASSEMBLY

REF. NO.	PART NO.	DESCRIPTION	J1J1					REMARKS
55	90387–05069	COLLAR	1					

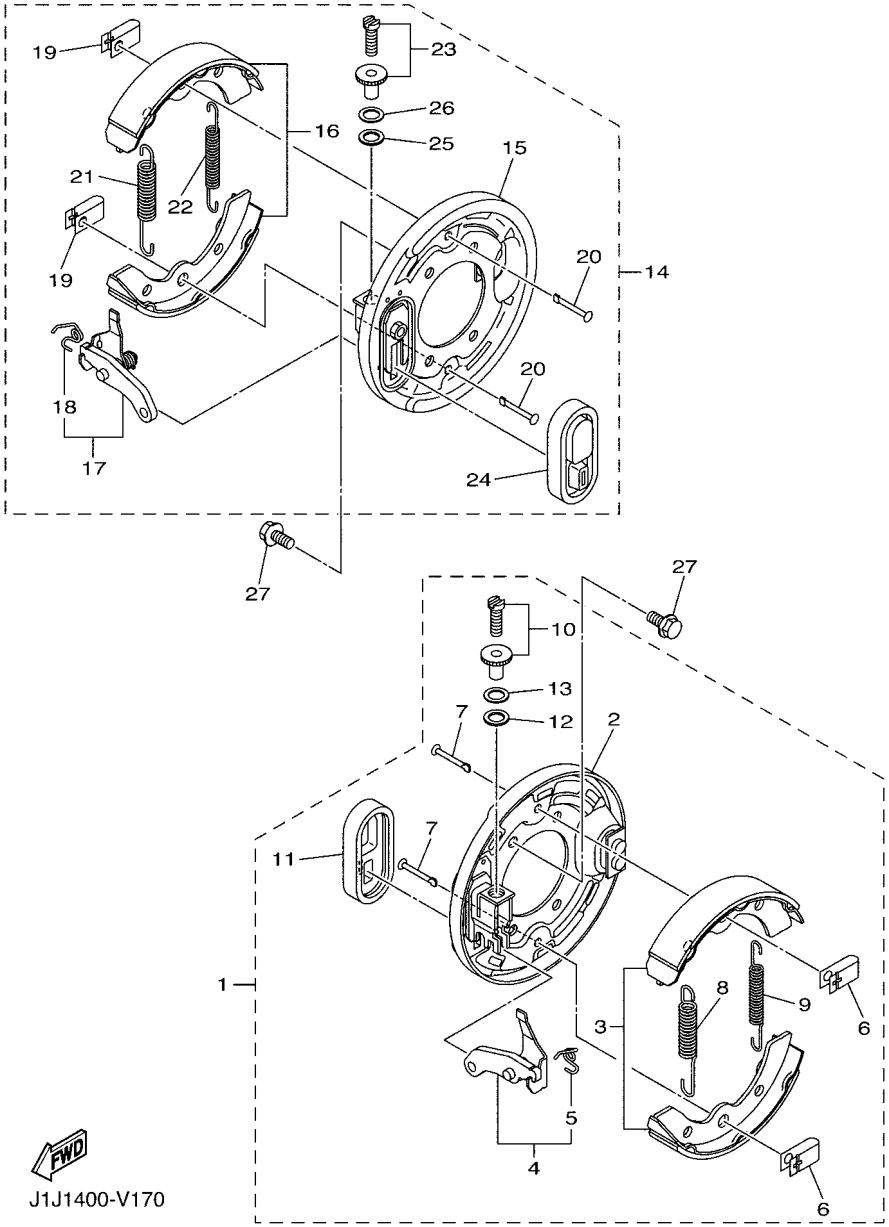

FIG. 17 BRAKE

REF. NO.	PART NO.	DESCRIPTION	J1J1					REMARKS
1	JN9–27280–10	BACKING PLATE ASSY 1	1					
2	JH2–27208–01	.BACKING PLATE SUB ASSY 1	1					
3	JN9–W2536–11	.BRAKE SHOE SET	1					
4	J38–27204–00	.LEVER ASSY 1	1					
5	J55–25358–00	..SPRING, RETURN	1					
6	J10–27281–00	.SPRING, SHOE CLAMP	2					
7	J10–27282–00	.PIN, SHOE HOLD DOWN	2					
8	90506–20281	.SPRING, TENSION	1					
9	90506–14001	.SPRING, TENSION	1					
10	J55–27270–00	.ADJUSTER ASSY	1					
11	J10–27286–00	.COVER, DUST	1					
12	90201–121H8	.WASHER, PLATE	1					
13	90201–121H9	.WASHER, PLATE	1					
14	JN9–27290–10	BACKING PLATE ASSY 2	1					
15	JH2–27209–01	.BACKING PLATE SUB ASSY 2	1					
16	JN9–W2536–11	.BRAKE SHOE SET	1					
17	J38–27205–00	.LEVER ASSY 2	1					
18	J55–25357–00	..SPRING, LEVER RETURN	1					
19	J10–27281–00	.SPRING, SHOE CLAMP	2					
20	J10–27282–00	.PIN, SHOE HOLD DOWN	2					
21	90506–20281	.SPRING, TENSION	1					
22	90506–14001	.SPRING, TENSION	1					
23	J55–27260–00	.ADJUSTER ASSY	1					
24	J10–27286–00	.COVER, DUST	1					
25	90201–121H8	.WASHER, PLATE	1					
26	90201–121H9	.WASHER, PLATE	1					
27	90105–082A0	BOLT, FLANGE	8					

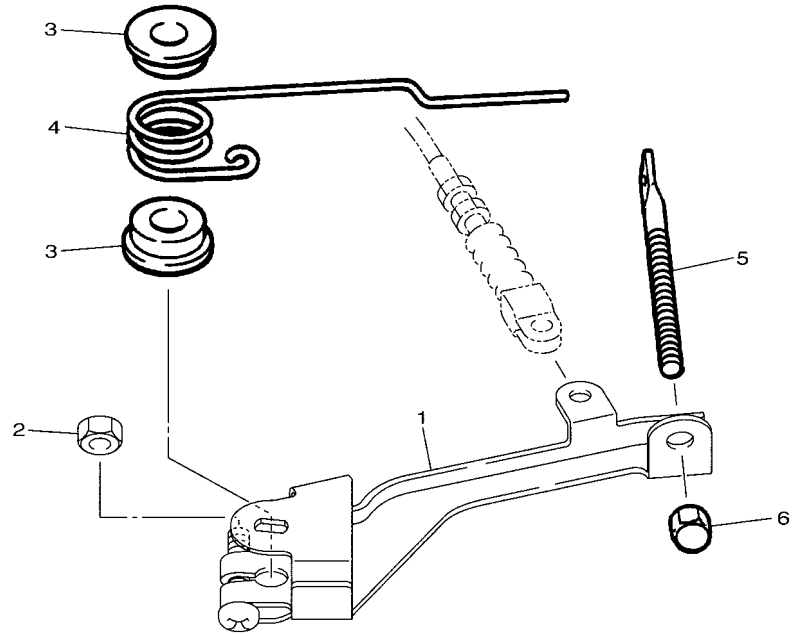

J0B1110-S180

FIG. 18 GOVERNOR

REF. NO.	PART NO.	DESCRIPTION	J1J1					REMARKS
1	J1J–F7951–00	LEVER, SPEED LIMITER	1					
2	95302–06600	NUT, HEXAGON	1					
3	90386–08141	BUSH	2					
4	90508–40678	SPRING, TORSION	1					
5	J1J–F7959–00	SCREW, ADJUSTING	1					
6	95602–06200	NUT, SELF-LOCKING	1					

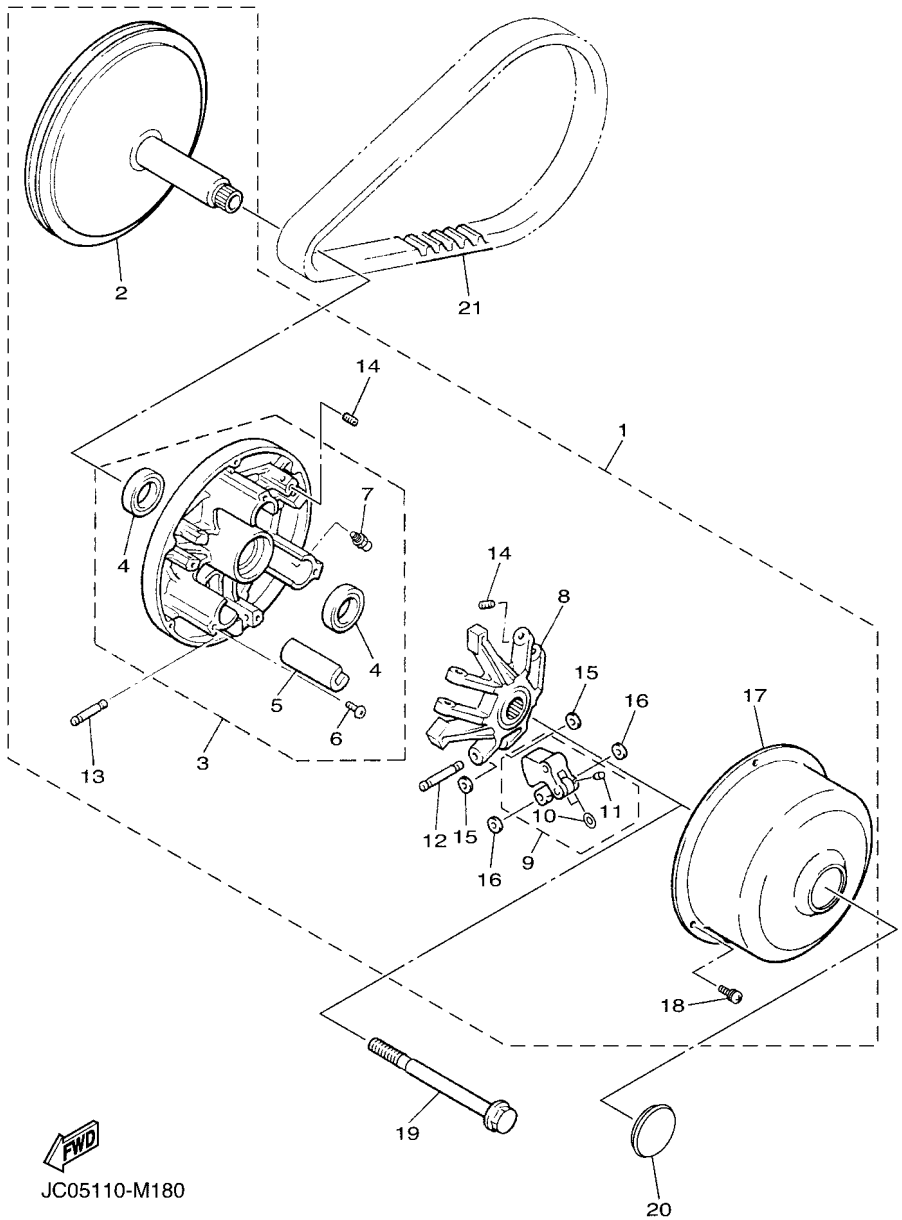

FIG. 19 PRIMARY SHEAVE

REF. NO.	PART NO.	DESCRIPTION	J1J1					REMARKS
1	J0B–G6201–01	PRIMARY CLUTCH ASSY	1					
2	JW8–G6210–01	.PRIMARY FIXED SHEAVE COMP.	1					
3	J0B–G6220–01	.PRIMARY SLIDING SHEAVE COMP.	1					
4	JW8–G624A–00	..OIL SEAL 1	2					
5	JW8–G6253–00	..SLIDER	3					
6	JW8–G4189–00	..SCREW	3					
7	JW8–F135J–00	..NIPPLE	1					
8	JW8–G6251–21	.SPIDER	1					
9	JW8–G6205–22	.WEIGHT LINK ASSY	3					
10	JW8–G5618–00	..WASHER, 1	2					
11	90113–04803	..BOLT, SET	2					
12	JW8–G6236–20	.PIN, WEIGHT	3					
13	JW8–G6237–20	.PIN, WEIGHT 2	3					
14	90113–04803	.BOLT, SET	6					
15	JW8–G5618–00	.WASHER, 1	6					
16	JW8–G5621–00	.WASHER, 2	6					
17	J0B–G6231–00	.CAP	1					
18	JW8–G5282–00	.SCREW	3					
19	90105–13801	BOLT, FLANGE	1					
20	90338–40210	PLUG	1					
21	J0B–G6241–01	BELT	1					

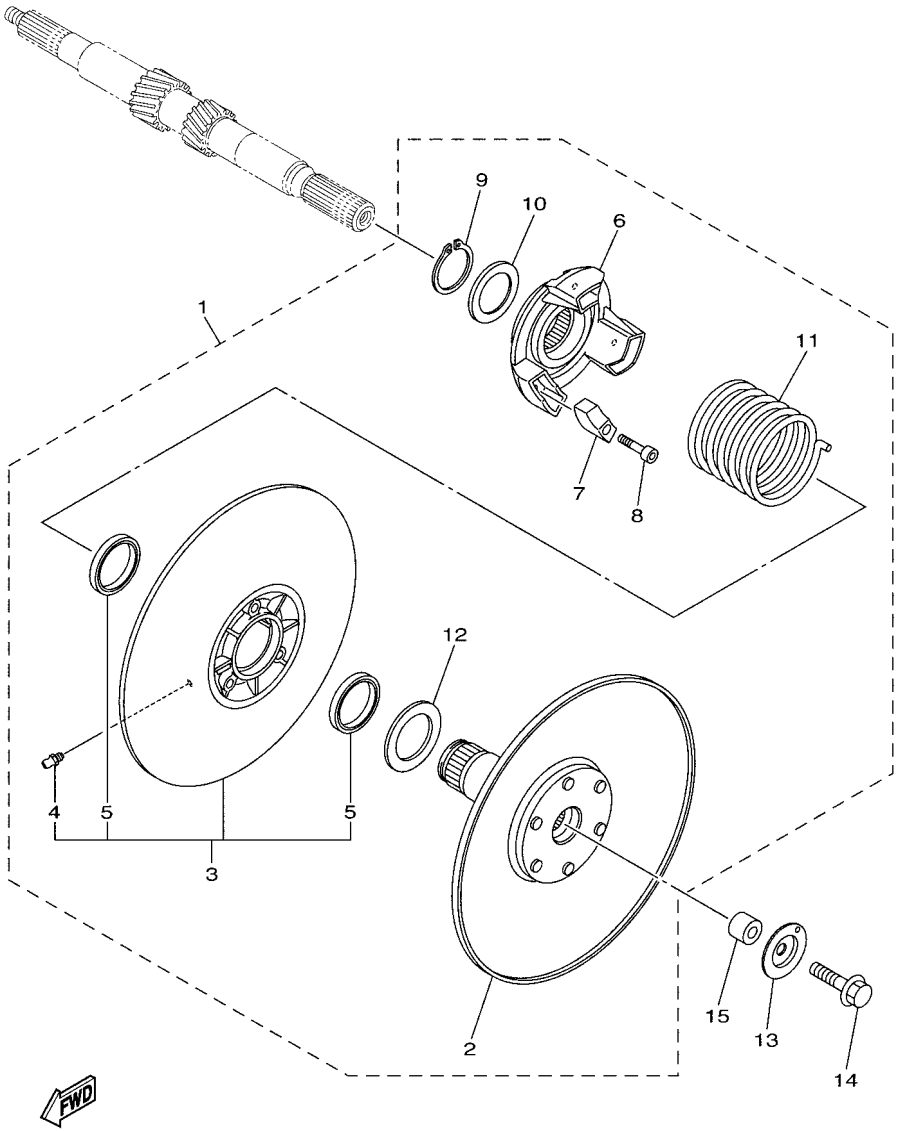

J0D2100-T210

FIG. 20 SECONDARY SHEAVE

REF. NO.	PART NO.	DESCRIPTION	J1J1					REMARKS
1	JW8–G6202–24	SECONDARY SHEAVE ASSY	1					
2	JW8–G6260–23	.SECONDARY FIXED SHEAVE COMP.	1					
3	JW8–G6270–21	.SECONDARY SLIDING SHEAVE COMP.	1					
4	JW8–F135J–00	..NIPPLE	1					
5	JW8–G624B–00	..OIL SEAL 2	2					
6	JW8–G6284–10	.SEAT, SECONDARY SPRING	1					
7	JW8–E7688–01	.SHOE, RAMP	3					
8	JW8–G6159–00	.BOLT 3	3					
9	JW8–G5531–00	.CLIP, DRIVE SHAFT	1					
10	JW8–G6374–00	.COLLAR, SPRING	1					
11	JW8–G6275–10	.SPRING, CLUTCH 1	1					
12	JW8–G5677–00	.WASHER	1					
13	90209–08013	WASHER	1					
14	90105–08260	BOLT, FLANGE	1					
15	90387–08100	COLLAR	1					

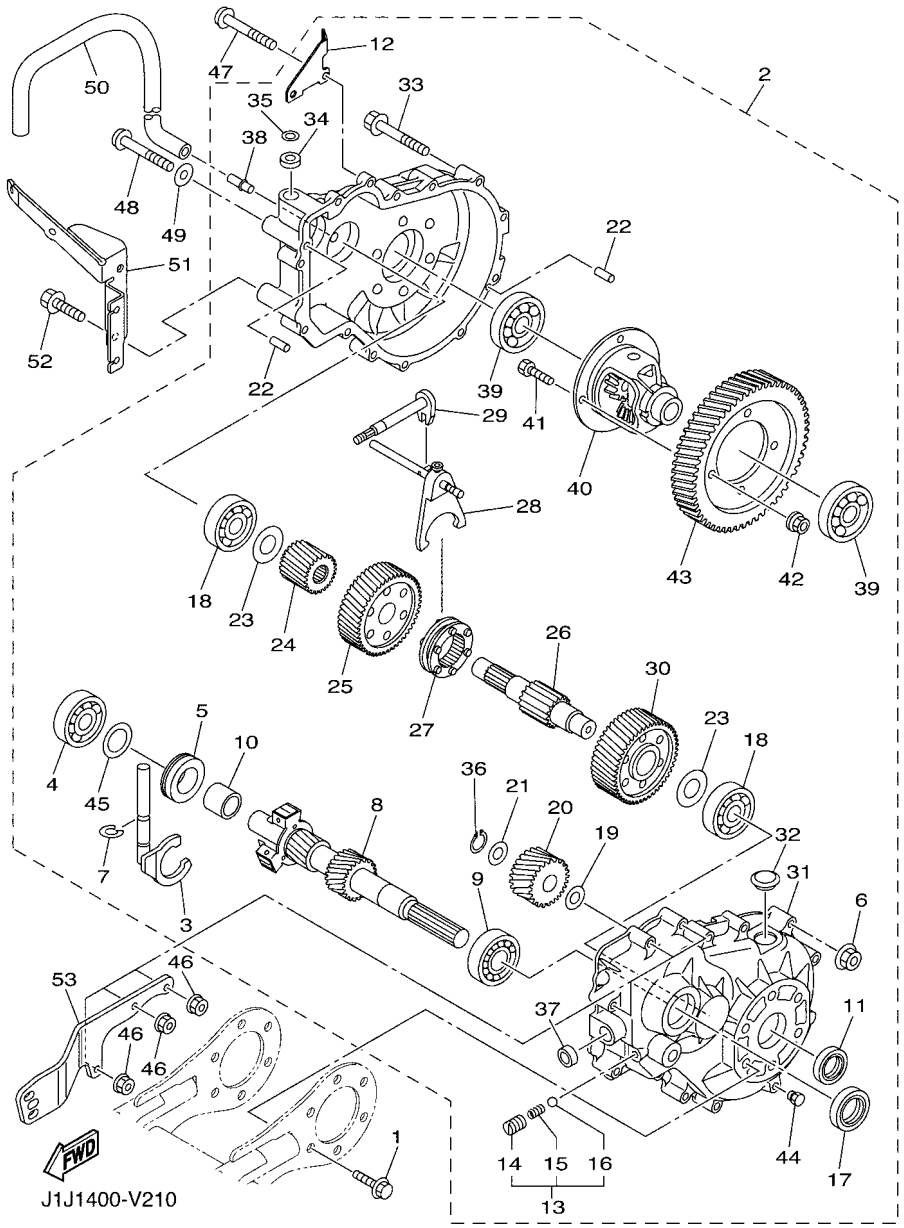

FIG. 21 TRANSMISSION

REF. NO.	PART NO.	DESCRIPTION	J1J1					REMARKS
1	95812–10020	BOLT, FLANGE	6					
2	J0B–G6301–01	TRANSMISSION ASSY	1					
3	J0B–G633E–00	.BAR 1	1					
4	93306–303Y6	.BEARING	1					
5	JW8–E1923–00	.SLEEVE, GOVERNOR	1					
6	J0B–G2391–00	.NUT 1	13					
7	JU0–F722H–00	.RETAINER	1					
8	J0B–G6320–00	.INPUT SHAFT ASSY	1					
9	J0B–G6164–00	.BEARING 1	1					
10	J0B–G3127–00	.COLLAR	1					
11	J0B–G3812–00	.SEAL, DUST	2					
12	J0B–G6555–00	.BRACKET 2	1					
13	JU0–G6376–00	.SPRING SET	1					
14	90113–08803	..BOLT, SET	1					
15	90501–10852	..SPRING, COMPRESSION	1					
16	93500–06826	..BALL	1					
17	93102–25868	.OIL SEAL	1					
18	J0B–G580H–00	.BEARING ASSY	2					
19	90201–208H9	.WASHER, PLATE	1					
20	J0B–G6356–00	.GEAR, IDLER	1					
21	90201–208J0	.WASHER, PLATE	1					
22	93606–10842	.PIN, DOWEL	2					
23	J0B–G1297–00	.WASHER, 1	2					
24	J0B–G6316–00	.GEAR, PINION 1	1					
25	J0B–G6326–00	.GEAR, WHEEL 1	1					
26	J0B–G633G–00	.SHAFT	1					
27	J0B–G6153–00	.COLLAR, GUIDE	1					

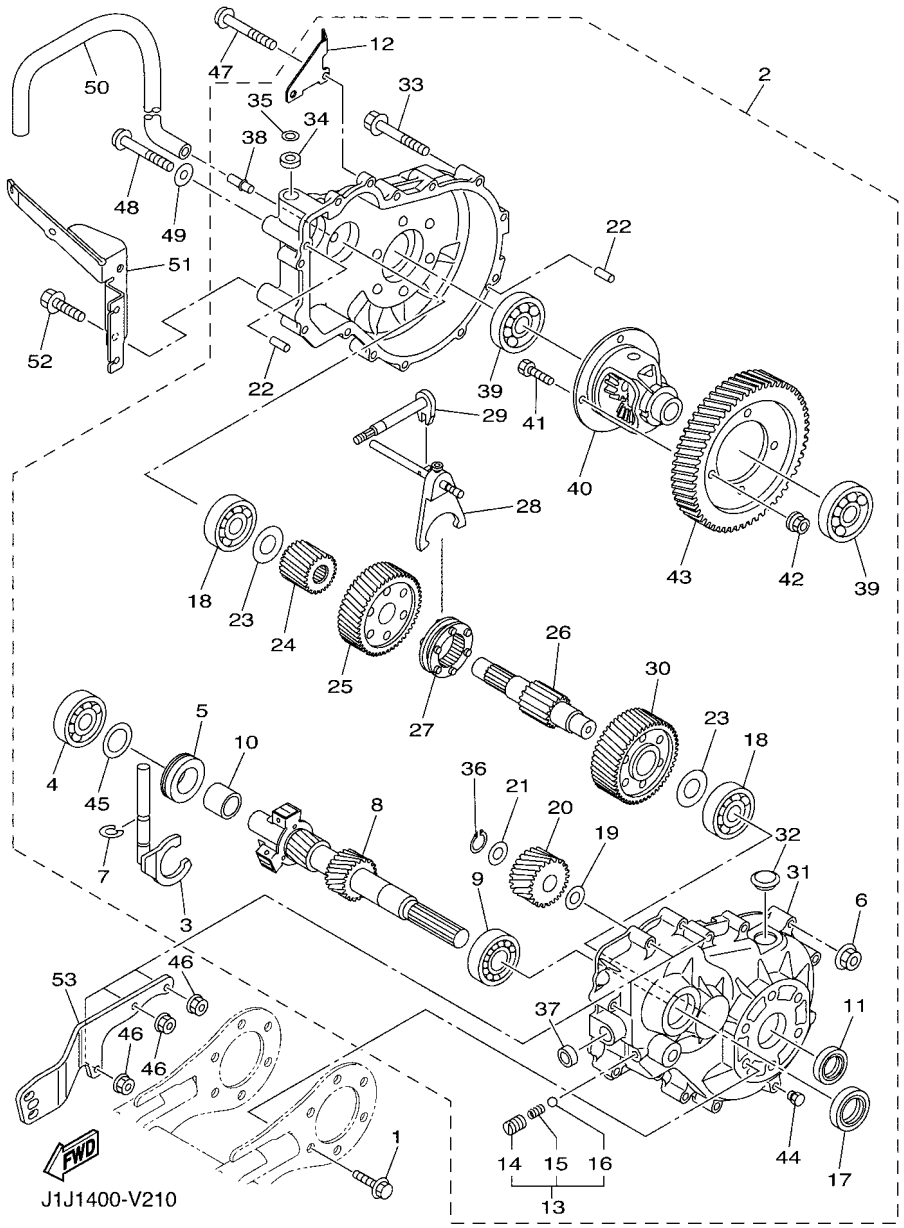

FIG. 21 TRANSMISSION

REF. NO.	PART NO.	DESCRIPTION	J1J1					REMARKS
28	J0B–G638E–00	.BAR, SHIFT 2	1					
29	J0B–G638A–00	.BAR, SHIFT 1	1					
30	J0B–G6327–00	.GEAR, WHEEL 2	1					
31	J0B–G6314–00	.COVER, TRANSMISSION	1					
32	JN3–G6432–00	.STOPPER	1					
33	J0B–G1148–00	.BOLT	13					
34	93109–10820	.OIL SEAL	1					
35	JU0–F723F–00	.WASHER, SPECIAL	1					
36	JW8–F47E3–00	.CIRCLIP	1					
37	93104–11829	.OIL SEAL	1					
38	JW8–G5378–00	.NIPPLE, HOSE	1					
39	93306–007Y0	.BEARING	2					
40	J0B–G6410–00	.DIFFERENTIAL ASSY.	1					
41	JC1–G2544–00	.BOLT	4					
42	90170–10840	.NUT	4					
43	J0B–G6355–00	.GEAR, PRIMARY	1					
44	J0B–G5148–00	.PLUG, DRAIN	1					
45	JN3–G6344–00	.SHIM, 0.76MM (0.030IN)	1					
46	95604–06200	NUT, U FLANGE	3					
47	90110–06363	BOLT, HEXAGON SOCKET HEAD	2					
48	90110–06364	BOLT, HEXAGON SOCKET HEAD	1					
49	90201–06089	WASHER, PLATE	1					
50	J1J–G2541–00	PIPE 1	1					
51	J1J–G6556–00	BRACKET 3	1					
52	95D32–08016	BOLT, FLANGE DEEP RECESS	2					
53	J0B–F2574–00	STIFFENER	1					

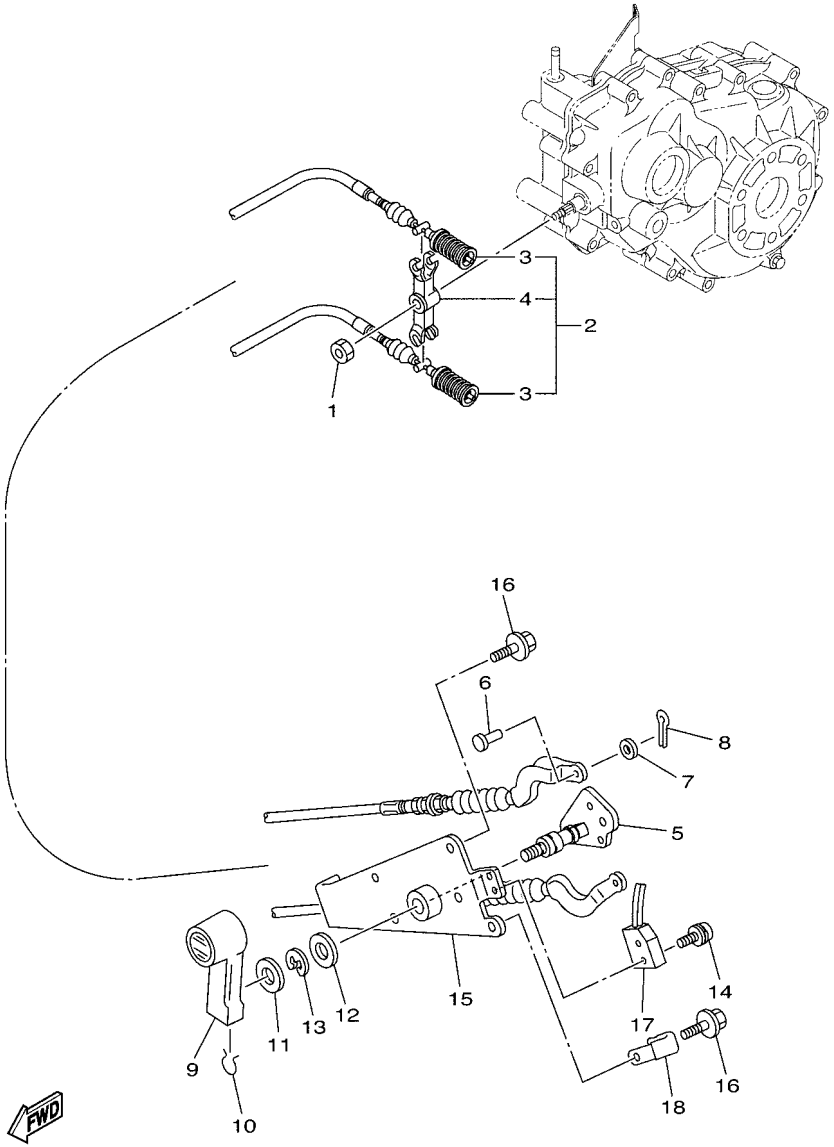

J1J1400-V220

FIG. 22 SHIFTER & CABLES

REF. NO.	PART NO.	DESCRIPTION	J1J1					REMARKS
1	95602–08100	NUT, U	1					
2	J0B–G8330–00	CABLE END ASSY	1					
3	J0B–G6371–00	.WIRE, SHIFT	2					
4	JW8–G6383–10	.LEVER, SHIFT 2	1					
5	J1J–G6382–00	LEVER, SHIFT 1	1					
6	91702–06014	PIN, CLEVIS	2					
7	92902–06600	WASHER, PLATE	2					
8	91402–20012	PIN, COTTER	2					
9	JN3–G6381–00	KNOB, SHIFT	1					
10	JN3–G6376–00	SPRING SET	1					
11	90201–201L9	WASHER, PLATE	1					
12	90201–19551	WASHER, PLATE	1					
13	99009–19400	CIRCLIP	1					
14	97602–04316	SCREW, PAN HEAD WITH WASHER	2					
15	J0B–G6372–10	BRACKET, SHIFT WIRE	1					
16	95D32–06012	BOLT, FLANGE DEEP RECESS	3					
17	JN3–82617–01	SWITCH	1					
18	90465–06038	CLAMP	1					

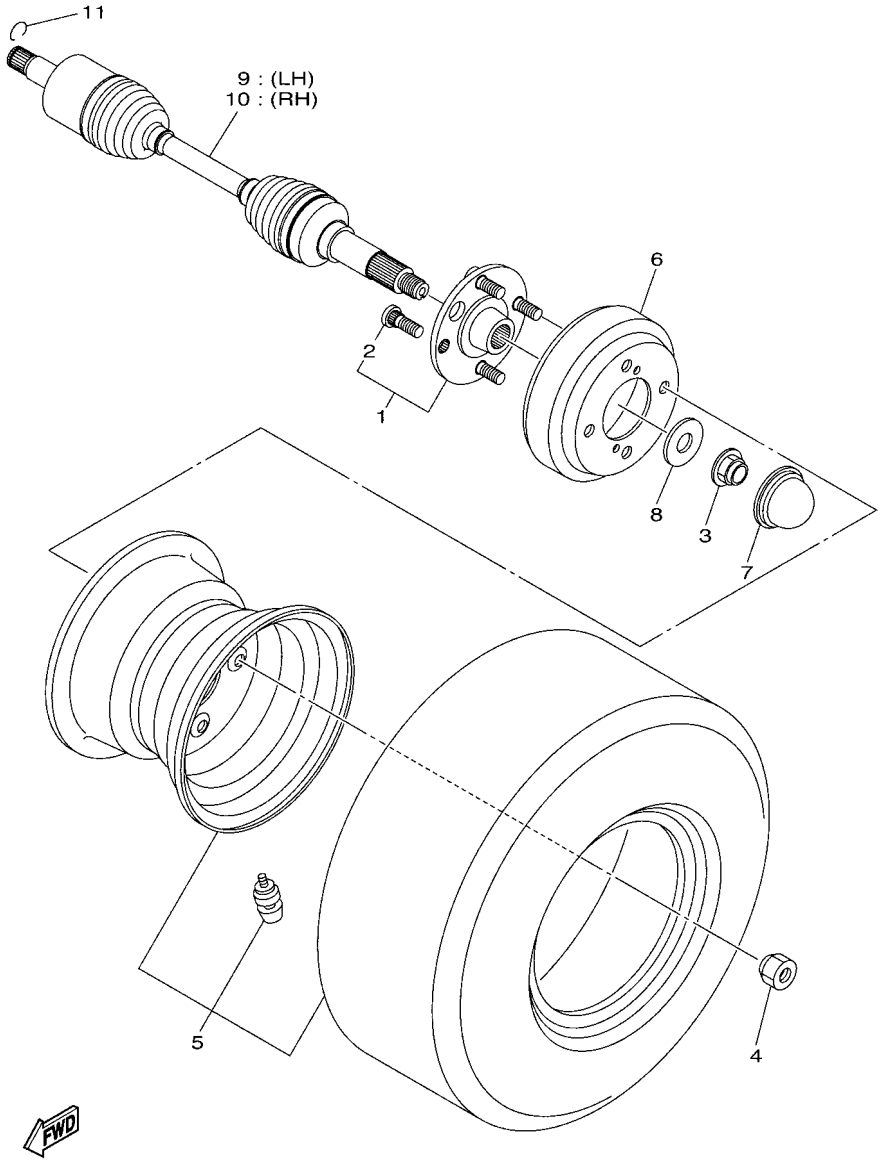

J0B1110-S230

FIG. 23 REAR AXLE & WHEEL

REF. NO.	PART NO.	DESCRIPTION	J1J1					REMARKS
1	J0B–F5310–10	HUB ASSY	2					
2	90114–12006	.BOLT, SERRATION	4					
3	90179–20016	NUT	2					
4	90179–12262	NUT	8					
5	J1B–F5100–00	WHEEL ASSY (18X8.50-8-4PR)	2					
6	JW8–G6521–00	DRUM	2					
7	JW8–F5118–00	COVER, HUB DUST	2					
8	90201–20035	WASHER, PLATE	2					
9	J0B–F518F–00	DRIVE SHAFT ASSY	1					
10	J0B–F518G–00	DRIVE SHAFT ASSY	1					
11	93450–22119	CIRCLIP	2					

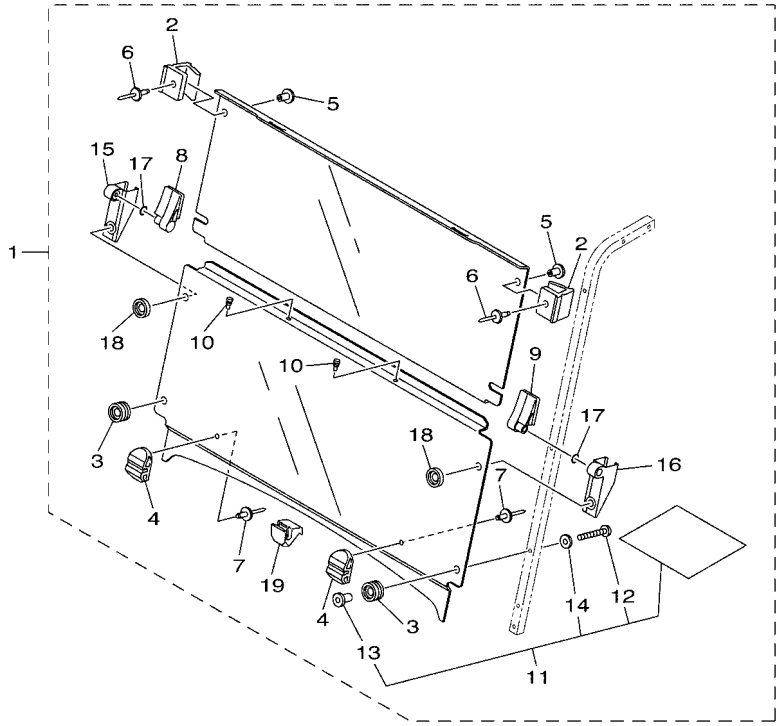

FWD

J1B4400-U100

FIG. 24 WINDSHIELD

REF. NO.	PART NO.	DESCRIPTION	J1J1					REMARKS
1	J0B–K7200–24	WINDSHIELD ASSY	1					
2	J0B–K7173–21	.LEVER, LATCH 1	2					
3	J0B–K7237–00	.GROMMET	2					
4	J0B–K7257–20	.GROMMET, W/S 3	2					
5	J0G–K7155–C0	.RIVET 1	2					
6	J0G–K7156–C0	.RIVET 2	2					
7	J0B–K7155–20	.RIVET 1	2					
8	J0B–K7145–20	.HINGE 1	1					
9	J0B–K7146–20	.HINGE 2	1					
10	J0B–K7529–20	.SPACER, BUMPER	2					
11	J0B–K7240–20	.WIND SHIELD HARDWARE KIT 1	1					
12	J0B–K7248–00	..SCREW 1	4					
13	J0B–K7217–00	..NUT, WIND SHIELD	4					
14	J0B–K7218–00	..WASHER 1	4					
15	J0B–K7147–20	.HINGE 3	1					
16	J0B–K7148–20	.HINGE 4	1					
17	J0B–F3147–20	.O-RING	2					
18	J0B–K7247–00	.GROMMET, W/S 2	2					
19	J0B–K838A–20	.RETAINER 1	1					

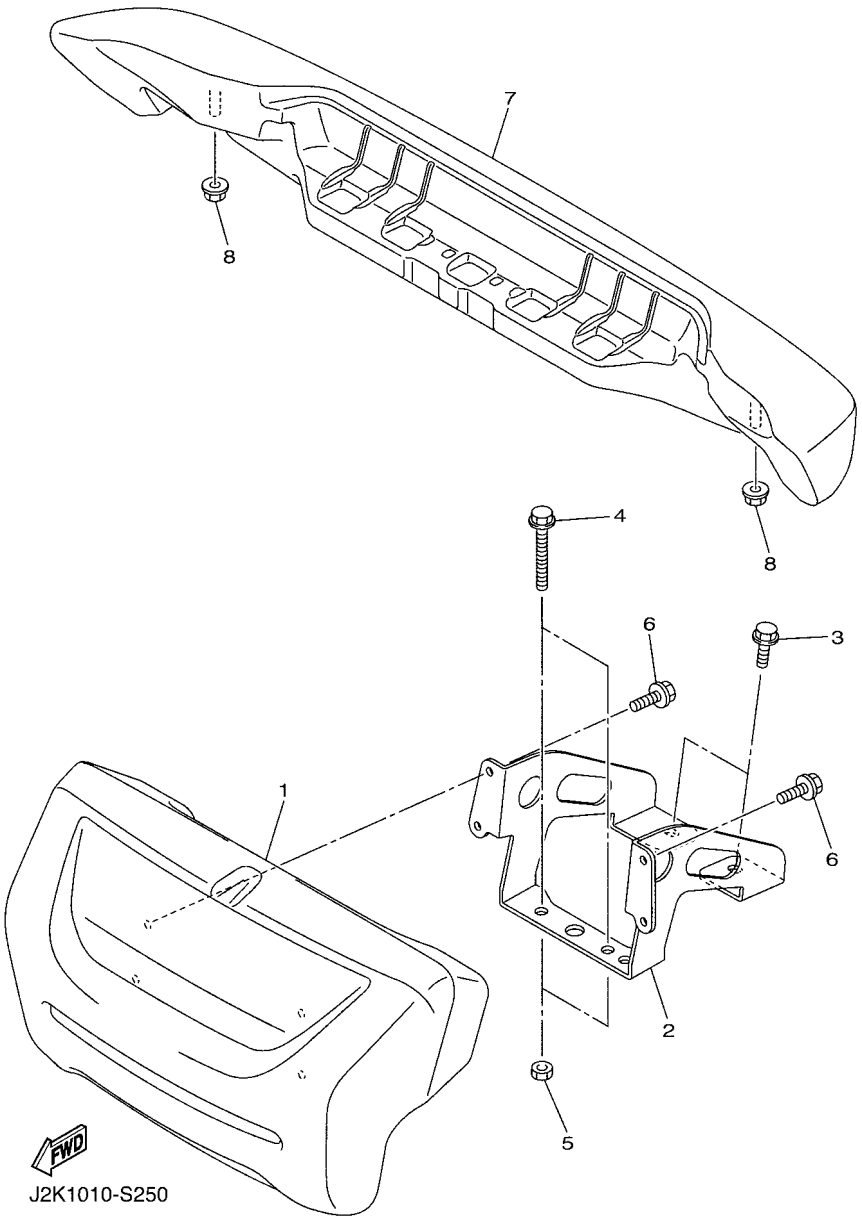

FIG. 25 BUMPER

REF. NO.	PART NO.	DESCRIPTION	J1J1					REMARKS
1	J0B–K7510–01	FRONT BUMPER COMP.	1					
2	J1B–K8164–00	STAY, FRONT BUMPER (L.H)	1					
3	95D32–08016	BOLT, FLANGE DEEP RECESS	2					
4	95D32–08050	BOLT, FLANGE DEEP RECESS	2					
5	95302–08700	NUT, HEXAGON	2					
6	95822–06012	BOLT, FLANGE	4					
7	J0B–K7540–00	REAR BUMPER COMP.	1					
8	95602–10200	NUT, S/L FLANGE	2					

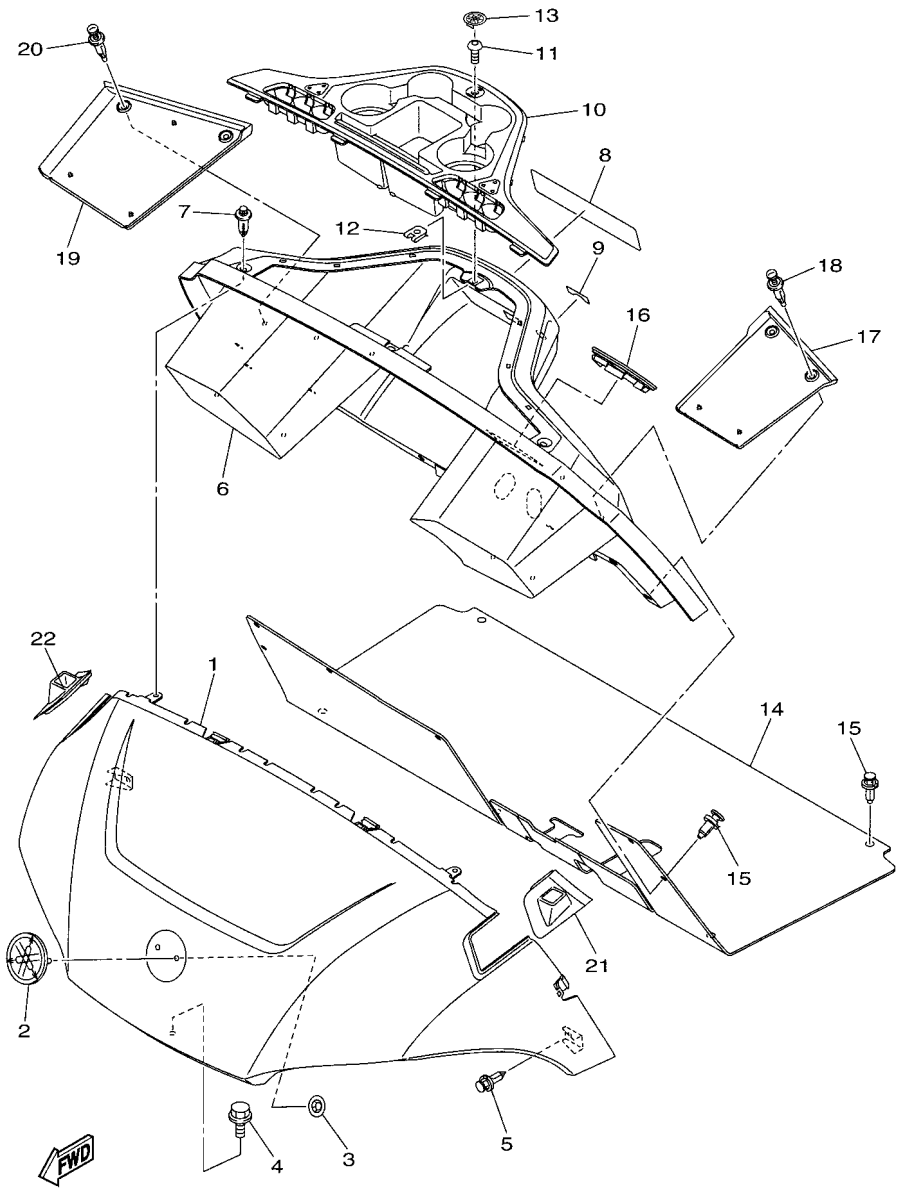

J1J1400-V260

FIG. 26 BODY

REF. NO.	PART NO.	DESCRIPTION	J1J1					REMARKS
1	J0B–K8115–A0	COWL, FRONT	1					UR FOR BW1
	J1B–K8115–10	COWL, FRONT	1					UR FOR DRMK
	J1B–K8115–20	COWL, FRONT	1					UR FOR DPBMU
	J1B–K8115–30	COWL, FRONT	1					UR FOR DNGM3
	J1B–K8115–40	COWL, FRONT	1					UR FOR SM1
	J1B–K8115–50	COWL, FRONT	1					UR FOR LYNM9
2	J1B–F4161–00	EMBLEM 1	1					
3	JU0–K7573–00	NUT, SPECIAL	2					
4	95812–06012	BOLT, FLANGE	1					
5	90269–06804	RIVET	2					
6	J0B–K8114–10	PANEL, FRONT	1					
7	90269–08001	RIVET	3					
8	J1B–K7768–10	LABEL, WARNING 8	1					UR ENGLISH
	J1B–K7768–20	LABEL, WARNING 8	1					UR ENGLISH/FRENCH
	J1B–K7768–30	LABEL, WARNING 8	1					UR GERMAN
	J1B–K7768–40	LABEL, WARNING 8	1					UR SPANISH
9	J1B–K8282–00	PLATE, SWITCH PANEL	1					
10	J0B–K835E–00	HOLDER, BEVERAGE	1					
11	90111–05805	BOLT,HEX. SOCKET BUTTON	1					
12	90183–05008	NUT, SPRING	1					
13	J1B–H2370–00	PLUG CAP ASSY	1					
14	J0B–K8233–10	MAT, MAIN FLOOR 3	1					
15	90269–09003	RIVET	12					
16	J0B–K8273–10	COVER, HOLE	1					
17	J1B–K8243–00	MAT, REAR BODY SIDE (LH)	1					
18	90269–07805	RIVET	2					
19	J1B–K8244–00	MAT, REAR BODY SIDE (RH)	1					

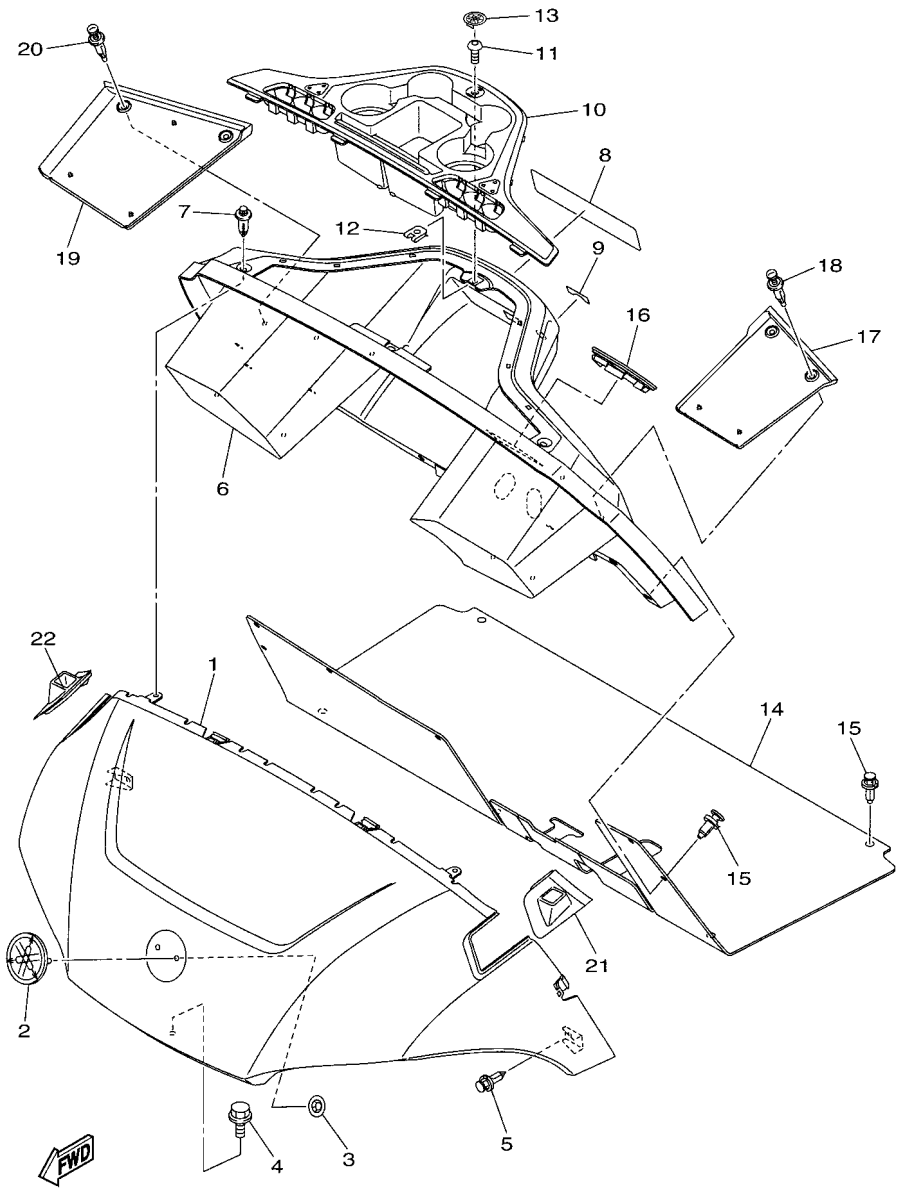

J1J1400-V260

FIG. 26 BODY

REF. NO.	PART NO.	DESCRIPTION	J1J1					REMARKS
20	90269–07805	RIVET	2					
21	J1B–K832F–00	GROMMET, ROOF SUPPORT 1	1					
22	J1B–K832G–00	GROMMET, ROOF SUPPORT 2	1					

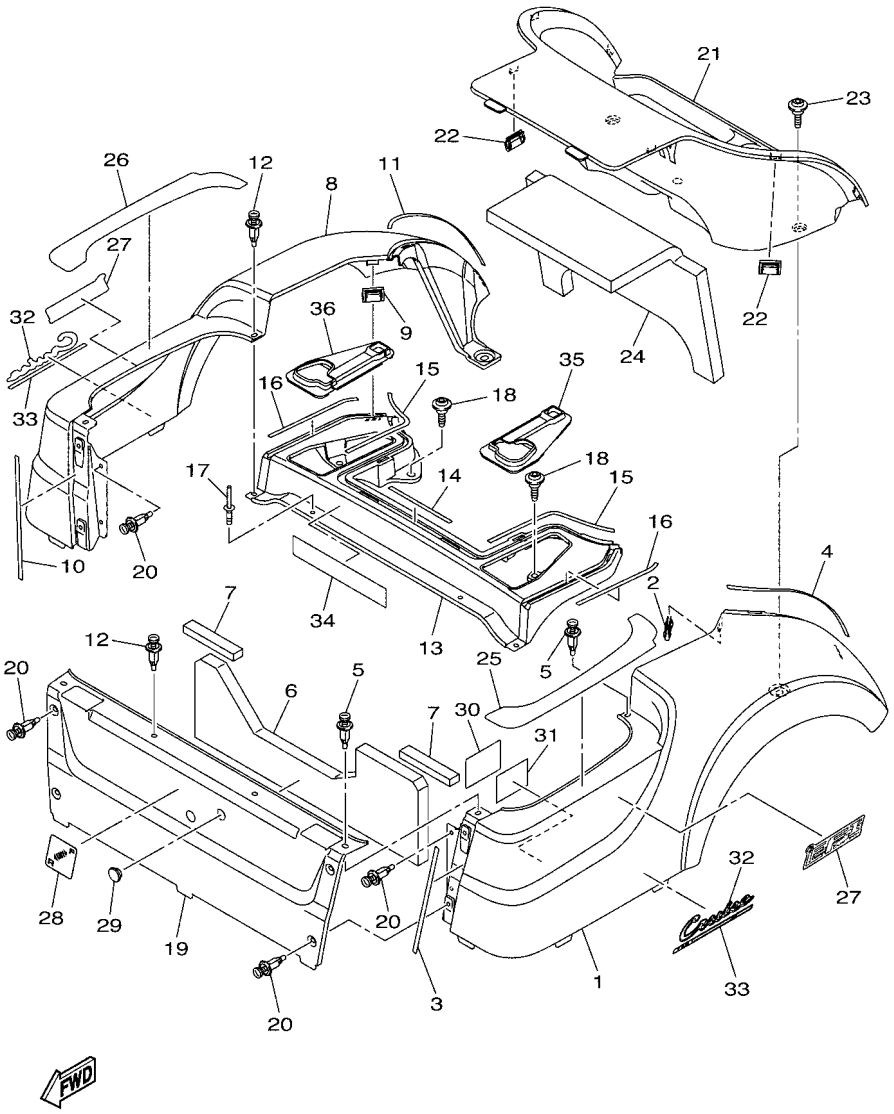

J1J1400-V270

FIG. 27 BODY 2

REF. NO.	PART NO.	DESCRIPTION	J1J1					REMARKS
1	J0B–K8111–A0	PANEL, BODY SHELL	1					UR FOR BW1
	J1B–K8111–10	PANEL, BODY SHELL	1					UR FOR DRMK
	J1B–K8111–20	PANEL, BODY SHELL	1					UR FOR DPBMU
	J1B–K8111–30	PANEL, BODY SHELL	1					UR FOR DNGM3
	J1B–K8111–40	PANEL, BODY SHELL	1					UR FOR SM1
	J1B–K8111–50	PANEL, BODY SHELL	1					UR FOR LYNM9
2	J0B–F3447–00	CLIP	1					
3	90520–02855	DAMPER, PLATE	1					
4	90520–02857	DAMPER, PLATE	1					
5	90269–07805	RIVET	3					
6	J1J–K8251–00	PAD, SILENCER 1	1					
7	90520–20830	DAMPER, PLATE	2					
8	J0B–K8112–A0	PANEL, BODY SHELL	1					UR FOR BW1
	J1B–K8112–10	PANEL, BODY SHELL	1					UR FOR DRMK
	J1B–K8112–20	PANEL, BODY SHELL	1					UR FOR DPBMU
	J1B–K8112–30	PANEL, BODY SHELL	1					UR FOR DNGM3
	J1B–K8112–40	PANEL, BODY SHELL	1					UR FOR SM1
	J1B–K8112–50	PANEL, BODY SHELL	1					UR FOR LYNM9
9	J0B–F3447–00	CLIP	1					
10	90520–02855	DAMPER, PLATE	1					
11	90520–02857	DAMPER, PLATE	1					
12	90269–07805	RIVET	3					
13	J0B–K819H–00	SHELL, REAR BODY	1					
14	90520–02853	DAMPER, PLATE	1					
15	90520–02856	DAMPER, PLATE	2					
16	90520–02854	DAMPER, PLATE	2					
17	JW7–K7329–00	RIVET	2					

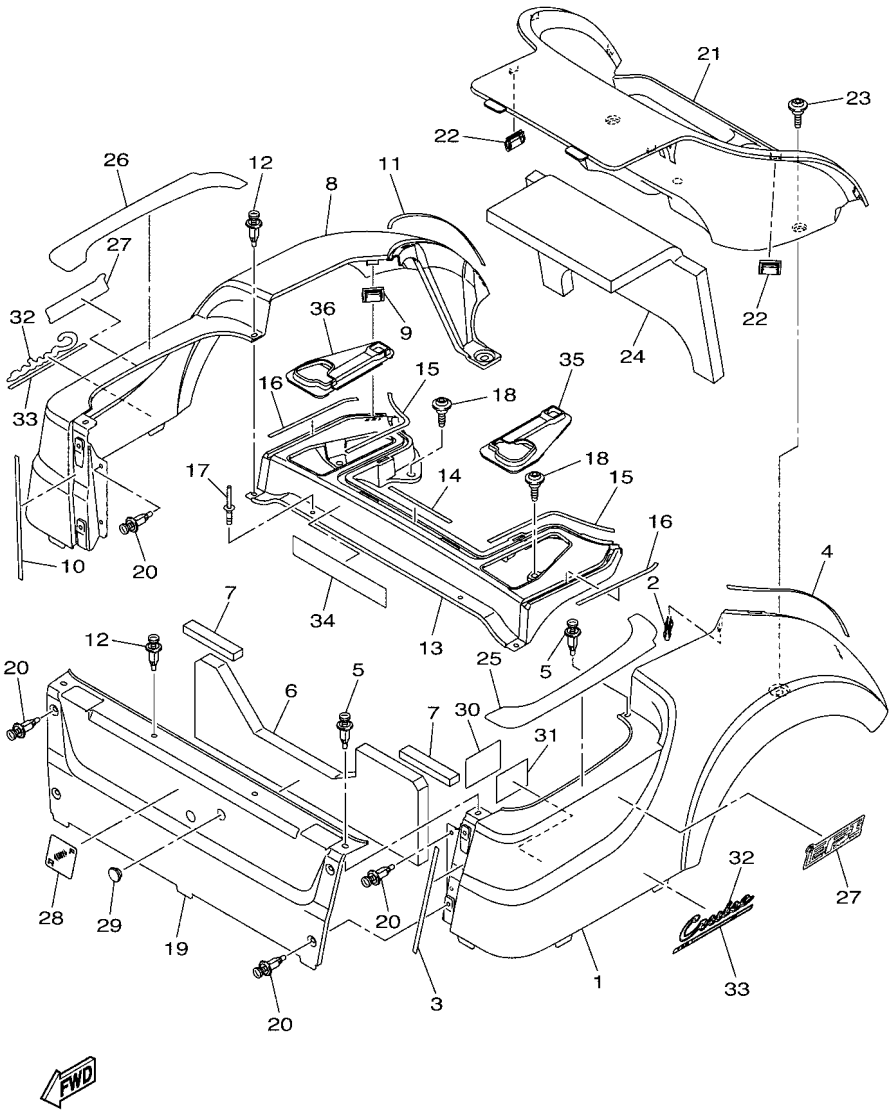

J1J1400-V270

FIG. 27 BODY 2

REF. NO.	PART NO.	DESCRIPTION	J1J1					REMARKS
18	J0B–F1738–00	BOLT	4					
19	J1J–K8141–00	PANEL, INTERMEDIATE BODY	1					UR FOR BW1
	J1J–K8141–10	PANEL, INTERMEDIATE BODY	1					UR FOR DRMK
	J1J–K8141–20	PANEL, INTERMEDIATE BODY	1					UR FOR DPBMU
	J1J–K8141–30	PANEL, INTERMEDIATE BODY	1					UR FOR DNGM3
	J1J–K8141–40	PANEL, INTERMEDIATE BODY	1					UR FOR SM1
	J1J–K8141–50	PANEL, INTERMEDIATE BODY	1					UR FOR LYNM9
20	90269–07805	RIVET	8					
21	J0B–K8237–02	COVER, REAR FLOOR	1					FOR 2 BAGS
22	J0B–F3447–00	CLIP	4					
23	J0B–F1738–00	BOLT	2					
24	J1J–K8255–00	PAD, SILENCER 5	1					
25	J0B–F2873–01	SEAL 1	1					
26	J0B–F2874–01	SEAL 2	1					
27	J1J–F1781–00	EMBLEM 1	2					
28	J1J–K7741–00	INDICATOR 1	1					
29	JR1–K8139–00	CAP, END	1					
30	J1B–F2127–00	SHIM	1					
31	J1J–F1566–00	TAPE, 1	1					
32	J1A–K81A1–00	EMBLEM 1	2					
33	J1B–K81B1–00	GRAPHIC 1	2					
34	J1J–K8297–10	PLATE, CAUTION 1	1					UR ENGLISH/FRENCH
	J1J–K8297–20	PLATE, CAUTION 1	1					UR GERMAN/SPANISH
35	J1B–K817H–00	TRIM, SIDE PANEL 1	1					
36	J1B–K817J–00	TRIM, SIDE PANEL 2	1					

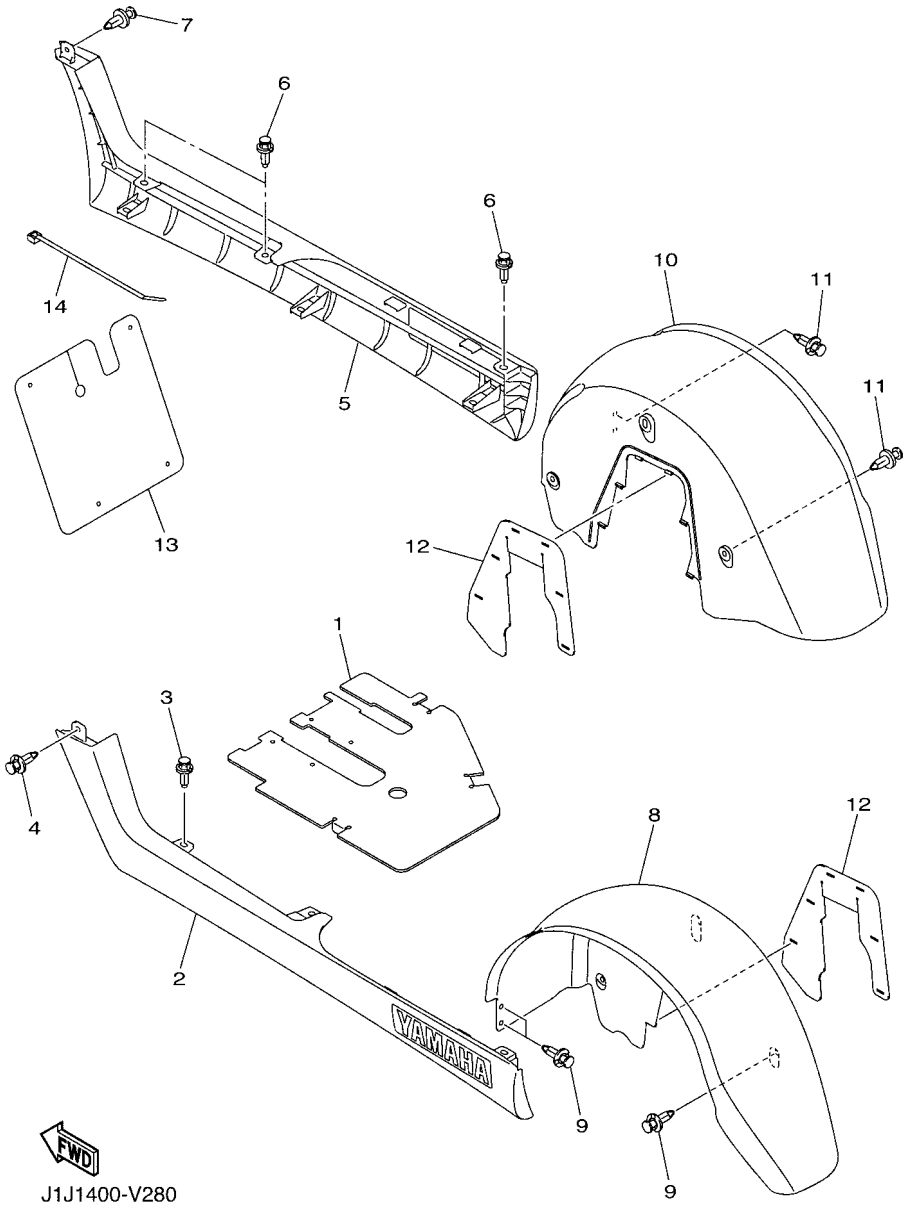

FIG. 28 BODY FITTING

REF. NO.	PART NO.	DESCRIPTION	J1J1					REMARKS
1	J1B–K8271–00	SERVICE LID, PEDAL	1					
2	J0B–K818A–00	PROTECTOR, SIDE PLATE	1					
3	90269–09003	RIVET	3					
4	90269–06804	RIVET	1					
5	J0B–K818B–00	PROTECTOR, SIDE PLATE 2	1					
6	90269–09003	RIVET	3					
7	90269–06804	RIVET	1					
8	J0B–K8191–00	PANEL, REAR FENDER 1	1					
9	90269–06804	RIVET	5					
10	J0B–K8192–00	PANEL, REAR FENDER 2	1					
11	90269–06804	RIVET	5					
12	J1J–K8197–00	FLAP, REAR FENDER	2					
13	J0B–K8187–00	FLAP, FRONT FENDER	1					
14	90464–76800	CLAMP	4					

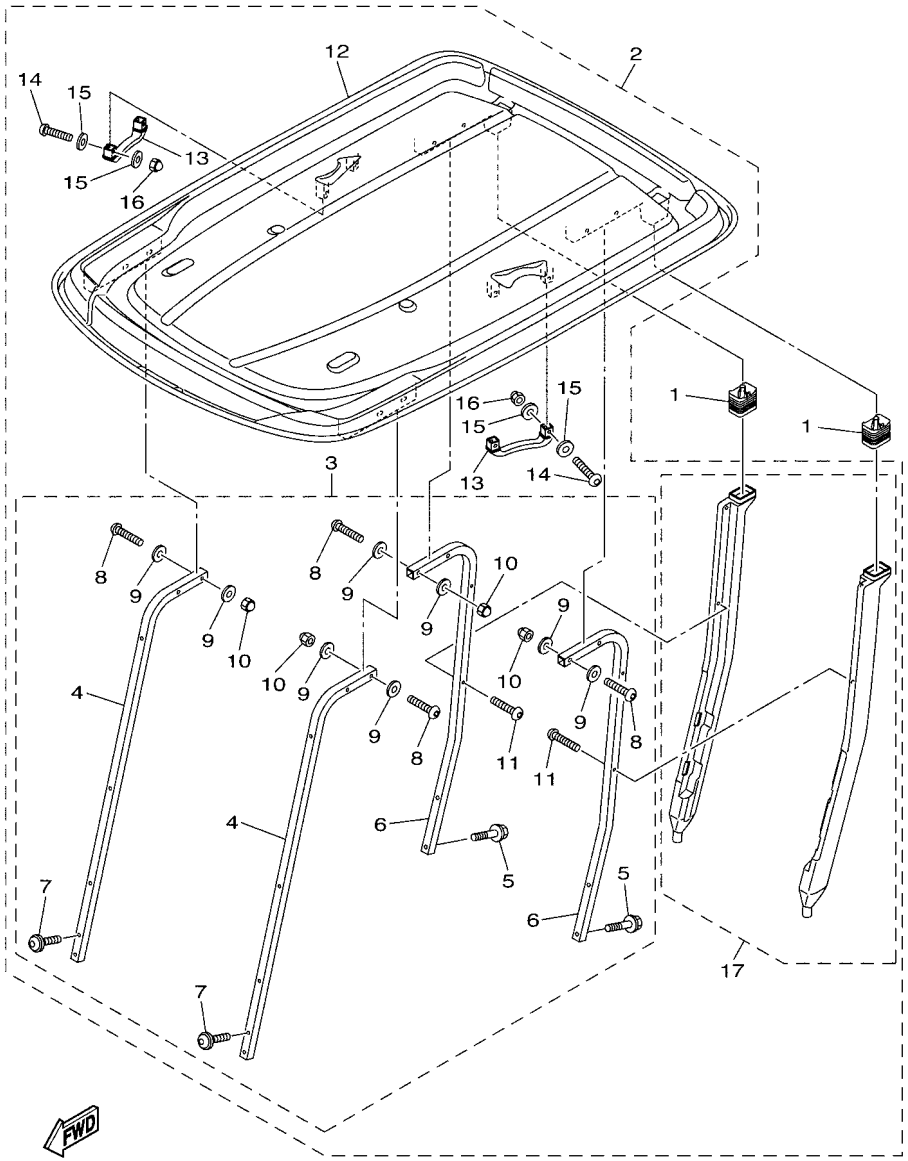

J0A2100-T370

FIG. 29 SUN ROOF

REF. NO.	PART NO.	DESCRIPTION	J1J1					REMARKS
1	JW1–F414G–10	SEAL	2					
2	J0B–K84A0–00	SUN TOP KIT	1					
3	J0B–K84A2–00	.HARDWARE KIT, SUN TOP	1					
4	J0B–K8312–00	..SUPPORT, SUN ROOF 1	2					
5	JW1–K8388–00	..BOLT, ROOF 1	4					
6	JW1–K8313–01	..SUPPORT, SUN ROOF 2	2					
7	J0B–K8388–00	..BOLT, ROOF 1	4					
8	JU0–K8388–00	..BOLT, ROOF 1	8					
9	JW1–F1549–01	..WASHER, FENDER MOLD	16					
10	JU0–K8398–00	..NUT, ROOF 1	8					
11	JW1–K7387–00	..SCREW	4					
12	JW1–K8314–10	.COVER, SUN ROOF	1					
13	JW1–K8214–00	.GRIP, HAND	2					
14	JU0–K8388–00	.BOLT, ROOF 1	4					
15	JW1–F1549–01	.WASHER, FENDER MOLD	8					
16	JU0–K8398–00	.NUT, ROOF 1	4					
17	J0B–F417A–00	.DRAIN TUBE ASSY	1					

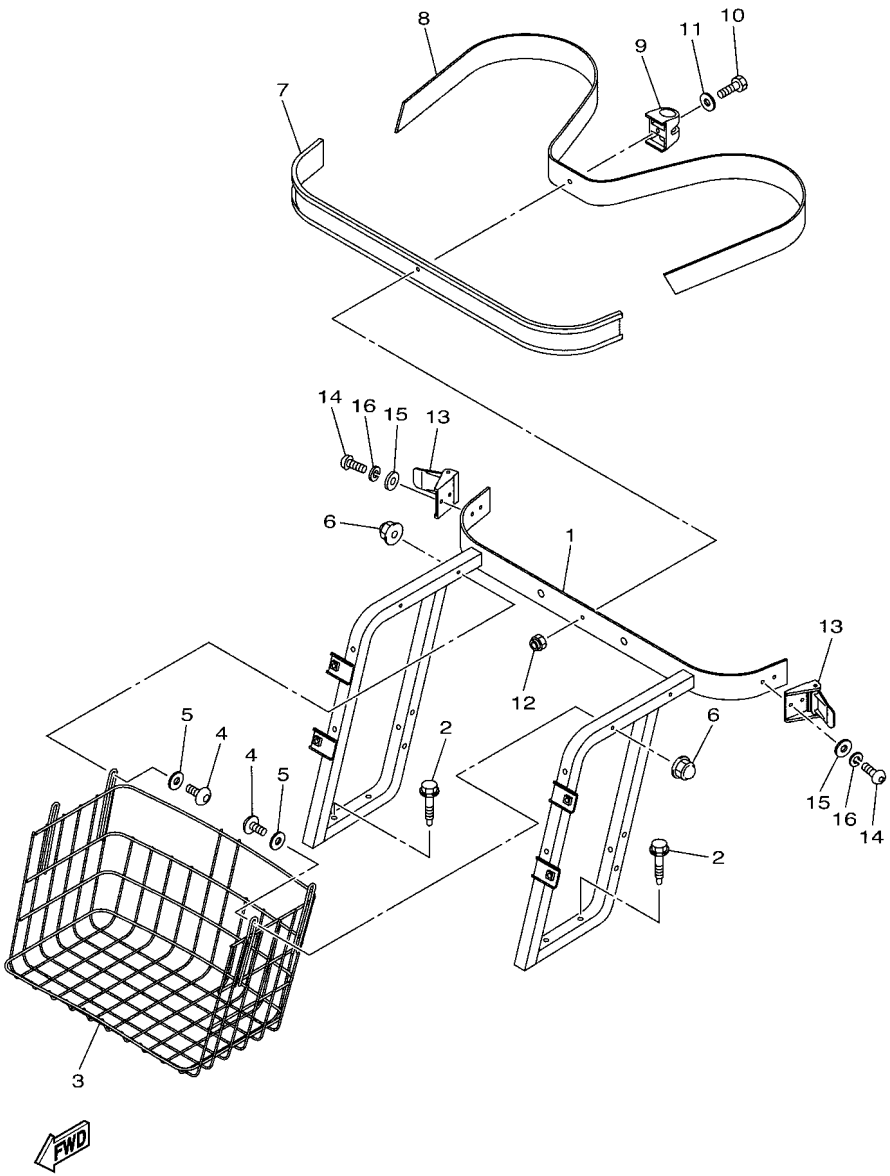

J1B1400-S160

FIG. 30 CARRIER

REF. NO.	PART NO.	DESCRIPTION	J1J1					REMARKS
1	J1B–K8423–00	SUPPORT, SEAT BACK	1					
2	90109–08178	BOLT	4					
3	JW1–K8340–00	LUGGAGE RACK ASSY., REAR	1					
4	92017–06040	BOLT, BUTTON HEAD	4					
5	90201–06020	WASHER, PLATE	4					
6	90176–06008	NUT, CROWN	4					
7	JF2–K8356–00	PAD, BAG SUPPORT	1					
8	JN6–K8355–20	BAND	1					
9	JW1–K834G–00	HOLDER, RAKE SAND	1					
10	97080–06020	BOLT	1					
11	92990–06200	WASHER, PLAIN	1					
12	95680–06100	NUT, U	1					
13	JN6–K8380–00	LOCK ASSY	2					
14	98580–06010	SCREW, PAN HEAD	4					
15	92990–06200	WASHER, PLAIN	4					
16	92990–06100	WASHER, SPRING	4					

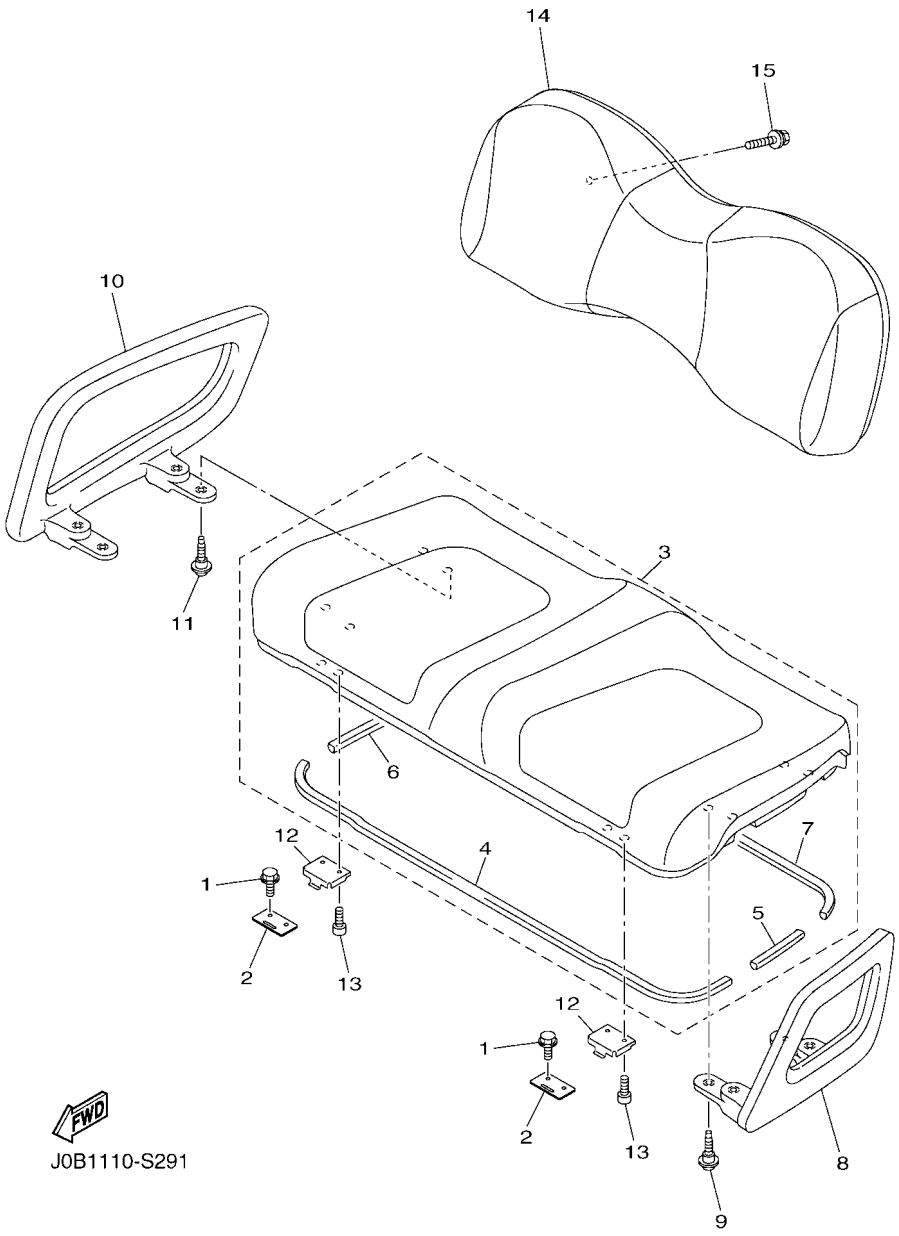

FIG. 31 SEAT

REF. NO.	PART NO.	DESCRIPTION	J1J1					REMARKS
1	95802–06040	BOLT, FLANGE	4					
2	J1J–K8427–00	HINGE, SEAT 2	2					
3	J0B–K8401–10	SEAT SUB-ASSY,CUSHION	1					
4	J0B–K8245–00	.SEAL 1	1					
5	J0B–K8246–00	.SEAL 2	1					
6	J0B–K8247–00	.SEAL 3	1					
7	J0B–K8248–00	.SEAL 4	1					
8	J0B–K8361–00	ARM REST 1	1					
9	J0B–F1738–00	BOLT	4					
10	J0B–K8362–00	ARM REST 2	1					
11	J0B–F1738–00	BOLT	4					
12	J1J–K8426–00	HINGE, SEAT 1	2					
13	90110–06125	BOLT, HEXAGON SOCKET HEAD	4					
14	JW1–K8402–10	SEAT SUB ASSY, BACK	1					
15	97580–06540	BOLT, WITH WASHER	4					

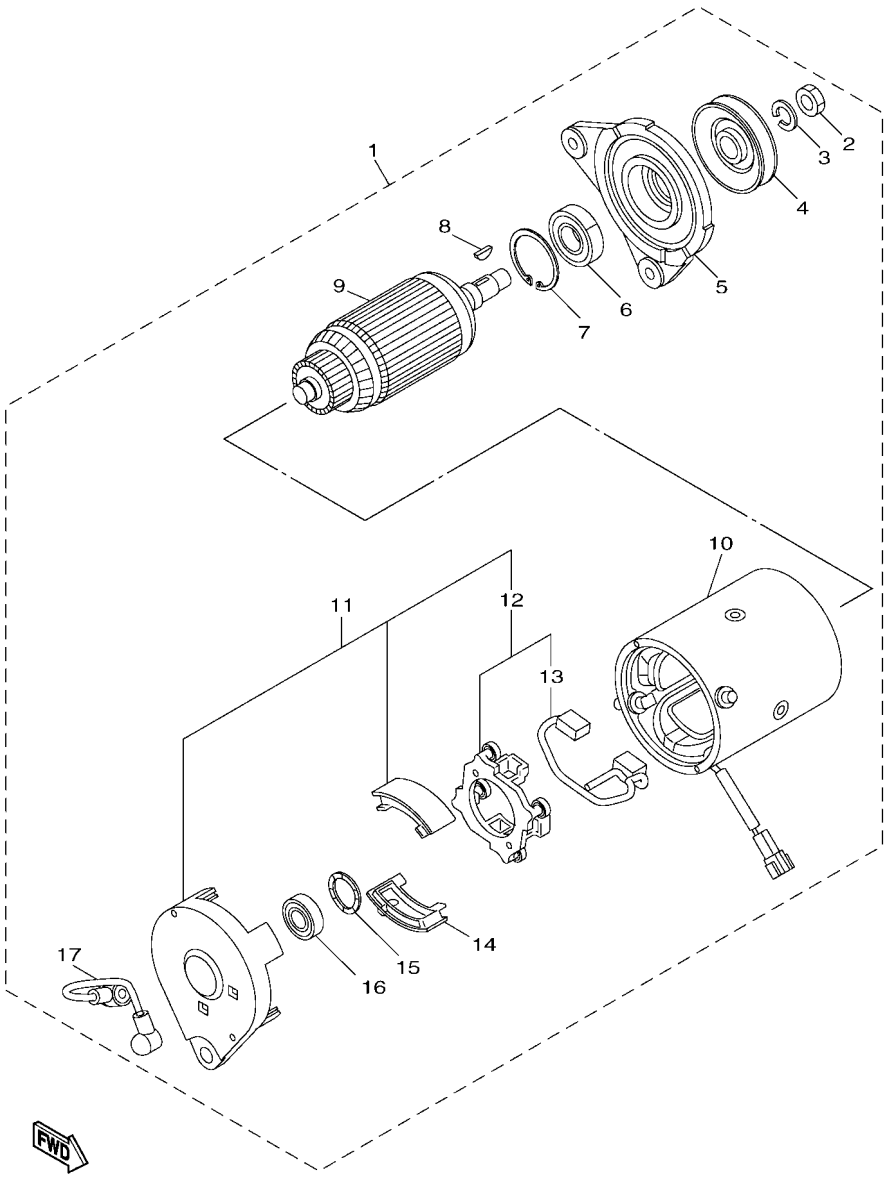

J1J1400-V320

FIG. 32 STARTING MOTOR

REF. NO.	PART NO.	DESCRIPTION	J1J1					REMARKS
1	J0B–H1100–00	STARTER GENERATOR ASSY	1					
2	J0B–H1353–00	.NUT	1					
3	J0B–H2534–00	.WASHER, SPECIAL	1					
4	J0B–H1161–00	.PULLEY	1					
5	J0B–H1165–00	.BRACKET, STARTER GENERATOR 1	1					
6	J0B–H1158–00	.BEARING 2	1					
7	J0B–HA906–00	.CIRCLIP 1	1					
8	J0B–H1163–00	.KEY	1					
9	J0B–H1150–00	.ARMATURE ASSY	1					
10	J0B–H1160–00	.FIELD COIL ASSY	1					
11	J0B–H1166–00	.BRACKET, STARTER GENERATOR 2	1					
12	J0B–H1119–00	..BRUSH HOLDER ASSY	1					
13	J0B–H1111–00	...BRUSH	1					
14	J0B–H1139–00	.COVER, BRUSH 2	1					
15	J0B–H1554–00	.WASHER	1					
16	J0B–H1157–00	.BEARING 1	1					
17	J0B–H1115–00	.WIRE, LEAD	1					

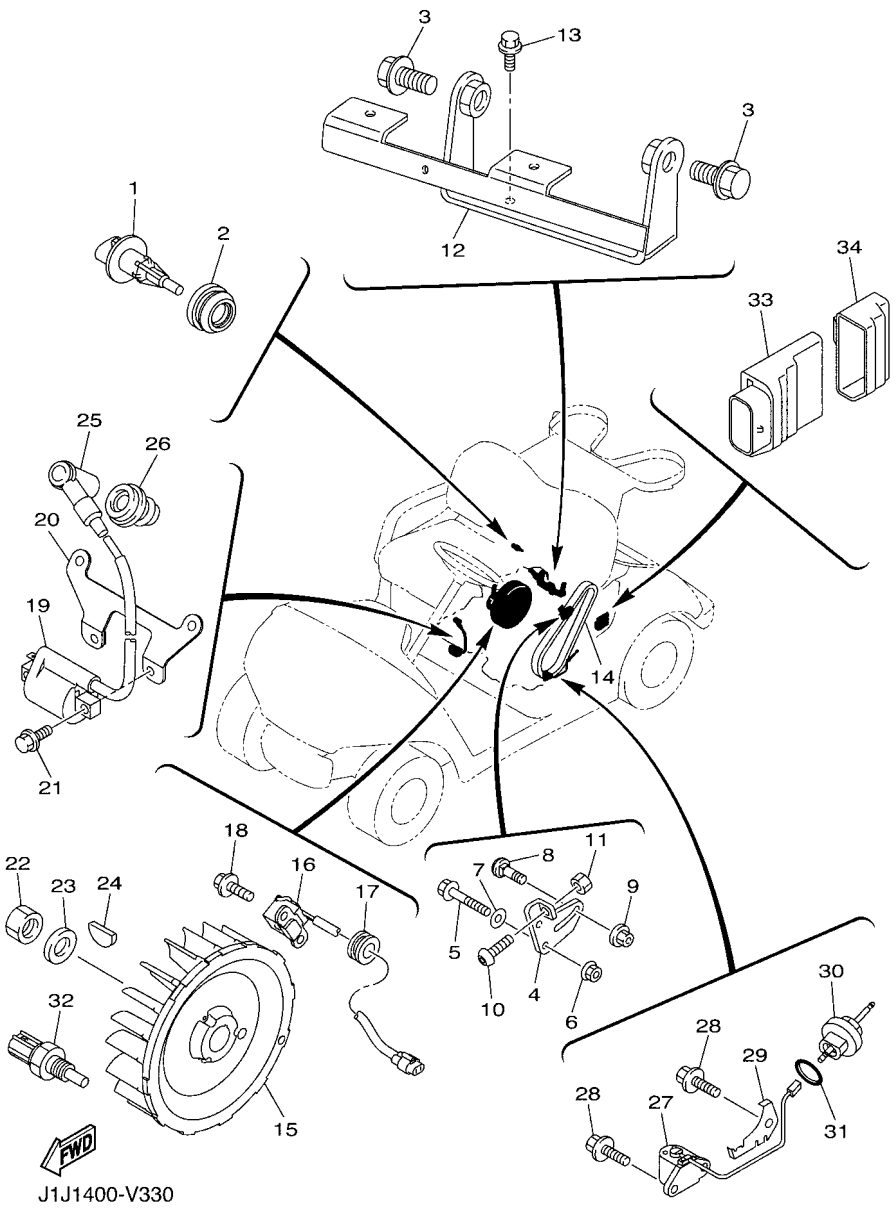

FIG. 33 ELECTRICAL 1

REF. NO.	PART NO.	DESCRIPTION	J1J1					REMARKS
1	5CA–85886–00	SENSOR, AIR TEMPRATURE	1					
2	J1J–E4435–00	GROMMET	1					
3	95812–12030	BOLT, FLANGE	2					
4	J1J–H1170–00	TENSIONER ASSY	1					
5	95812–08040	BOLT, FLANGE	2					
6	90179–08491	NUT	2					
7	90201–08043	WASHER, PLATE	2					
8	90109–08827	BOLT	1					
9	95702–08500	NUT, FLANGE	1					
10	92012–06030	BOLT, BUTTON HEAD	1					
11	95302–06600	NUT, HEXAGON	1					
12	J1J–H1171–00	BRACKET, STARTER GENERATOR	1					
13	95D32–08020	BOLT, FLANGE DEEP RECESS	2					
14	JW1–H1173–02	BELT	1					
15	JC0–85650–10	ROTOR ASSY	1					
16	JB2–81670–00	PICK-UP ASSY	1					
17	90480–20564	GROMMET	1					
18	95822–06016	BOLT, FLANGE	2					
19	1S4–82310–02	IGNITION COIL ASSY	1					
20	JC0–82316–00	BRACKET, IGNITION COIL	1					
21	95822–06016	BOLT, FLANGE	2					
22	95302–18600	NUT, HEXAGON	1					
23	90201–18620	WASHER, PLATE	1					
24	90280–04052	KEY, WOODRUFF	1					
25	JN6–82370–00	PLUG CAP ASSY	1					
26	JE8–82372–00	SEAL, PLUG CAP	1					
27	JT0–85720–01	OIL LEVEL GAUGE ASSY	1					

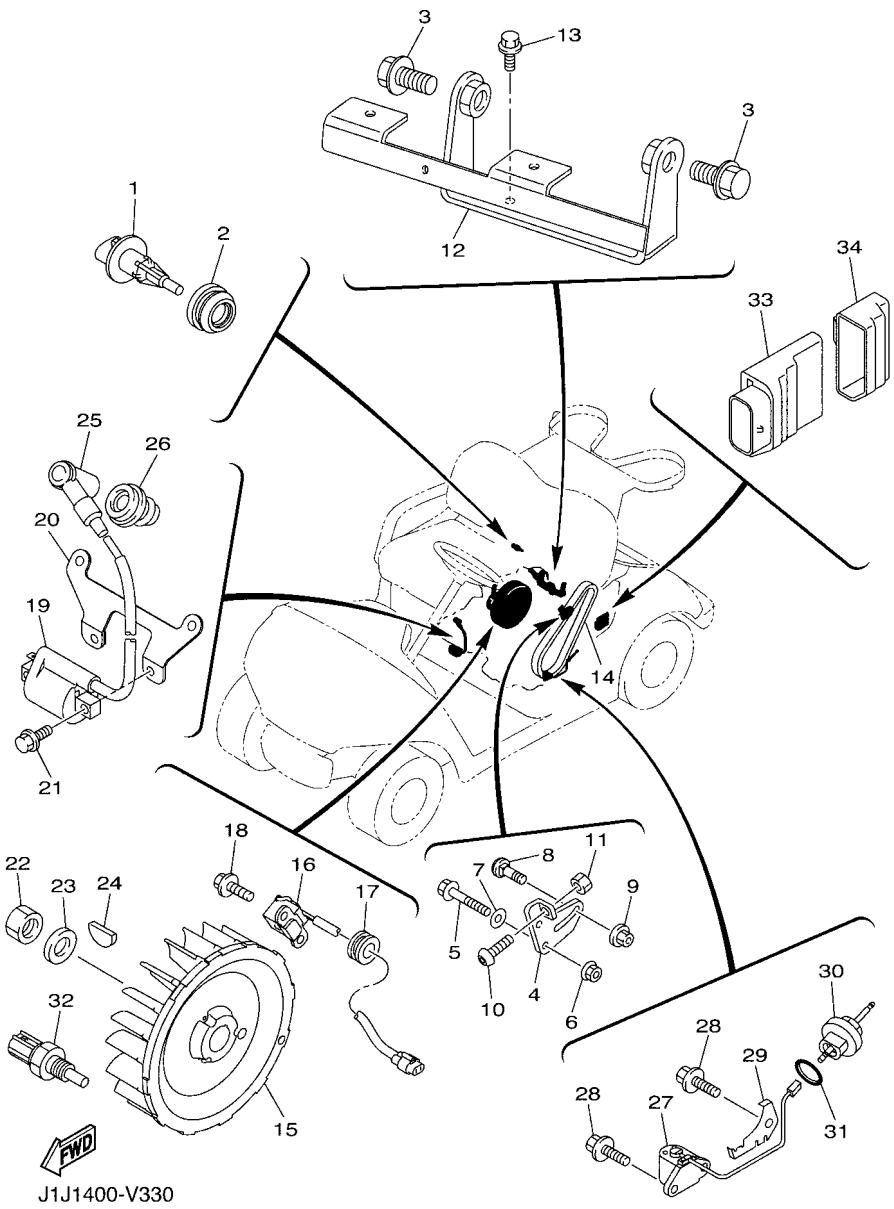

FIG. 33 ELECTRICAL 1

REF. NO.	PART NO.	DESCRIPTION	J1J1					REMARKS
28	95822–06012	BOLT, FLANGE	3					
29	JT0–85724–00	CLAMP	1					
30	JT0–15362–00	PLUG, OIL LEVEL	1					
31	93210–15414	O-RING	1					
32	4P9–83591–00	THERMO UNIT	1					
33	J0B–H591A–10	ENGINE CONTROL UNIT ASSY	1					
34	J1J–H5546–00	BAND	1					

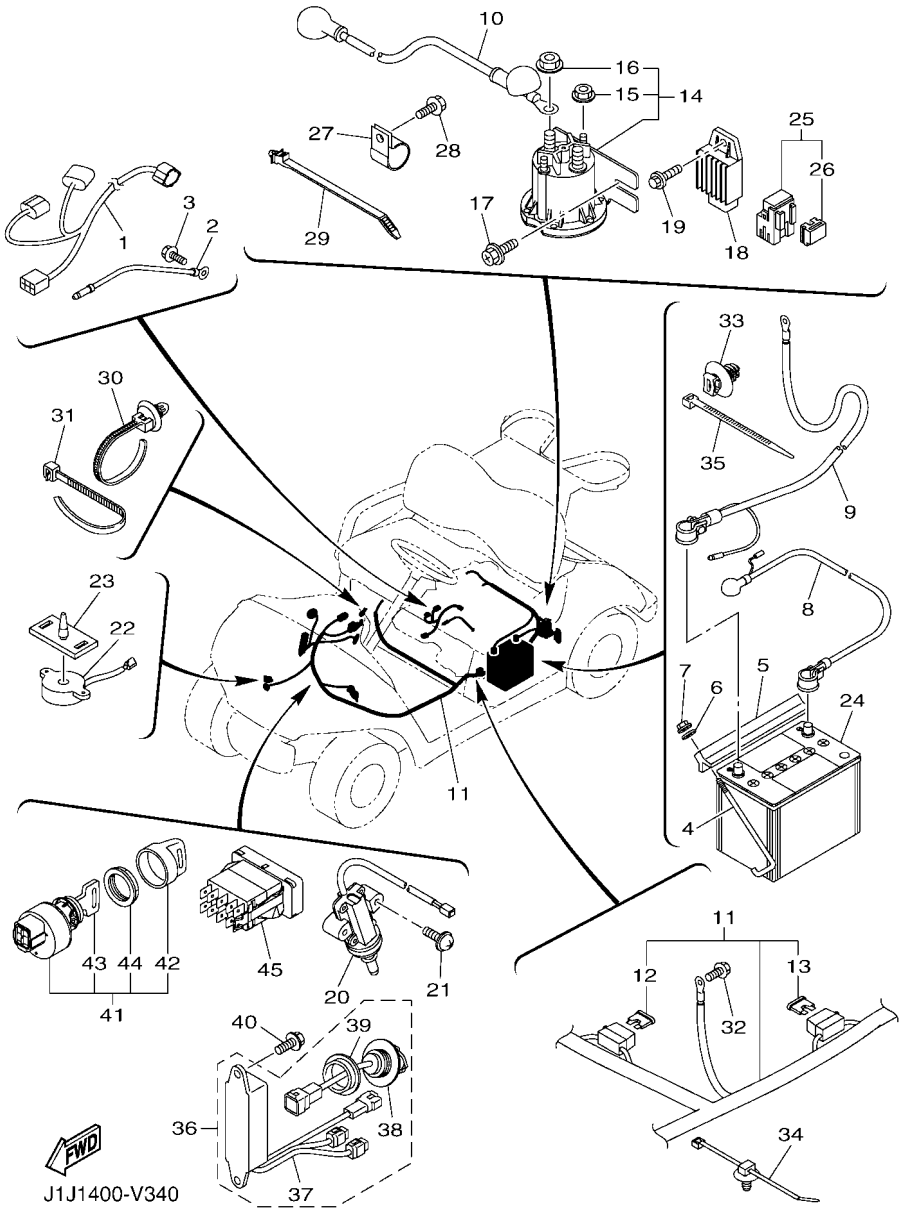

FIG. 34 ELECTRICAL 2

REF. NO.	PART NO.	DESCRIPTION	J1J1					REMARKS
1	J0B–82149–01	WIRE, LEAD 3	1					
2	JC0–82519–00	WIRE, EARTH LEAD	1					
3	95822–06012	BOLT, FLANGE	1					
4	J1J–H2133–00	SCREW, FITTING	2					
5	J55–H2136–00	PLATE, BATTERY FITTING	1					
6	92902–06200	WASHER	2					
7	95702–06500	NUT, FLANGE	2					
8	J1J–H2115–00	WIRE, PLUS LEAD	1					
9	J1J–H2116–00	WIRE, MINUS LEAD	1					
10	J1J–H2117–00	WIRE, LEAD	1					
11	J1J–H2590–00	WIRE HARNESS ASSY	1					
12	JU7–H2151–00	.FUSE (20 A)	1					
13	JN6–H2151–00	.FUSE (10A)	1					
14	JW1–H1950–00	RELAY ASSY	1					
15	90179–05807	.NUT	2					
16	90179–08824	.NUT	2					
17	95822–06012	BOLT, FLANGE	2					
18	JF2–81910–11	VOLTAGE REGULATOR ASSY	1					
19	95D32–06012	BOLT, FLANGE DEEP RECESS	1					
20	JF7–82817–22	SWITCH	1					
21	97602–05225	SCREW, PAN HEAD WITH WASHER	2					
22	JR1–H3383–02	BUZZER	1					
23	J1J–H3386–00	STAY, BUZZER	1					
24	*	BATTERY ASSY (MFX-90R GS 12V)	1					LM
25	J1J–H1950–00	RELAY ASSY	1					
26	5EA–81952–00	.HOLDER, RELAY	1					
27	90461–14108	CLAMP	1					

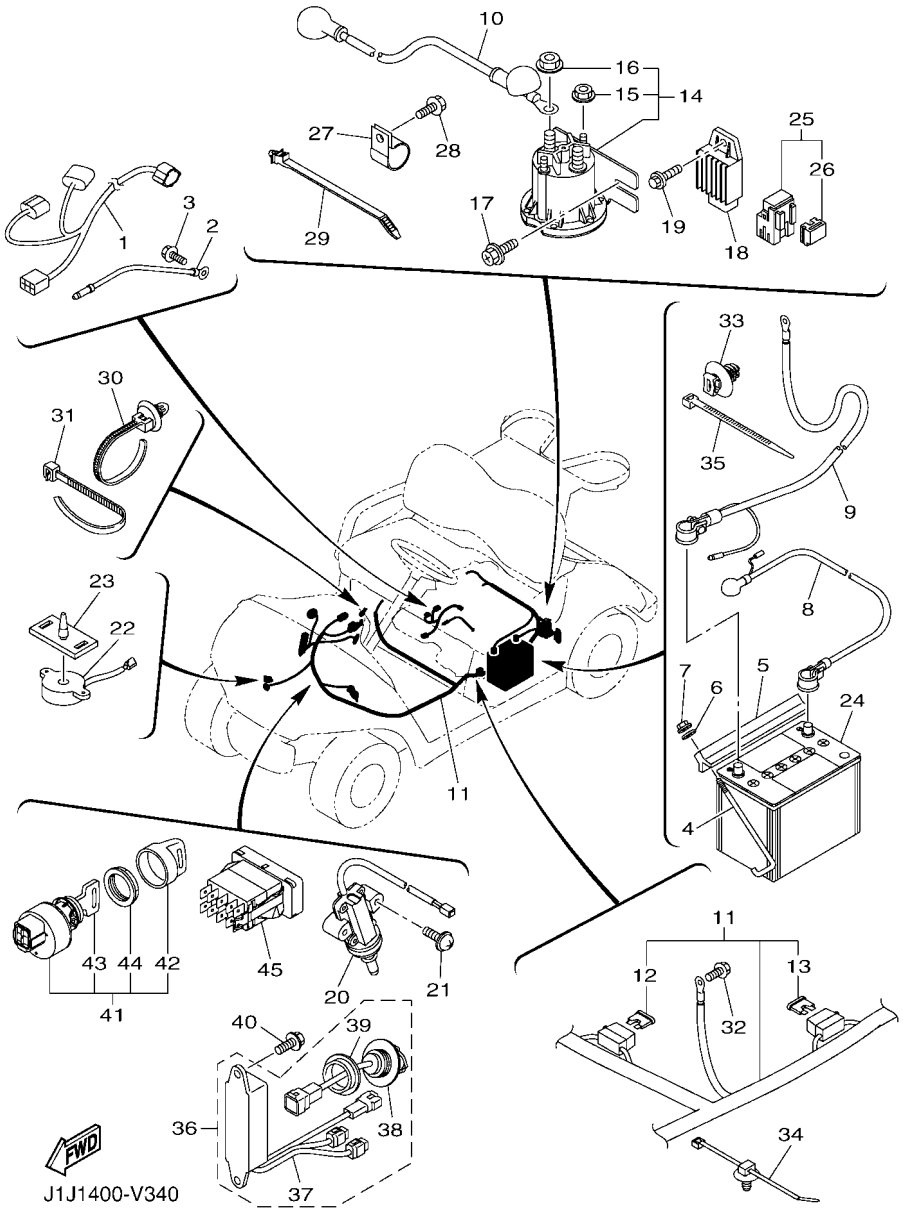

FIG. 34 ELECTRICAL 2

REF. NO.	PART NO.	DESCRIPTION	J1J1					REMARKS
28	95D32–06016	BOLT, FLANGE DEEP RECESS	1					
29	90464–09823	CLAMP	1					
30	90464–20005	CLAMP	1					
31	90464–70803	CLAMP	1					
32	95D32–08016	BOLT, FLANGE DEEP RECESS	1					
33	5UG–F2465–10	HOLDER	1					
34	1NS–F1338–00	CLAMP	3					
35	90464–45804	CLAMP	2					
36	J0D–H21E0–03	USB ASSY	1					
37	J0D–H21E1–01	.PLUG, USB	1					
38	J0D–H21E2–01	.CABLE, USB	2					
39	J0D–H2114–00	.NUT	2					
40	95D32–06016	BOLT, FLANGE DEEP RECESS	2					
41	JW1–H2510–00	MAIN SWITCH ASSY	1					
42	5UG–H2579–00	.CAP, KEY	1					
43	JU2–H2511–00	.KEY, MAIN SWITCH	2					
44	JU6–H2569–00	.NUT, MAIN SWITCH	1					
45	JW8–H3530–00	PILOT LIGHT ASSY	1					

PART NO.	REF. NO.
JT0–11111–00	1 – 1
JN6–11116–00	1 – 10
JN6–11133–10	1 – 2
JR7–11163–10	1 – 18
JN6–11168–00	1 – 11
JN6–11169–00	1 – 12
JT0–11181–00	1 – 3
JN6–11191–01	1 – 9
JN6–11193–00	1 – 13
812–11198–00	8 – 6
JN6–11400–00	2 – 1
JN6–11454–10	2 – 8
JR7–11610–00	2 – 3
JR7–11610–10	2 – 3
JR7–11610–20	2 – 3
JR7–11631–00–A0	2 – 2
583–11633–00	2 – 4
JR7–11635–00	2 – 2
JR7–11636–00	2 – 2
JN6–11650–10	2 – 6
JN6–11654–10	2 – 7
JN6–12111–10	3 – 2
J38–12117–01	3 – 6
J38–12118–00	3 – 7
4G0–12119–00	3 – 13
7RH–12121–10	3 – 3
JN6–12151–10	3 – 8
JN6–12153–10	3 – 4
JR7–12154–10	3 – 12
J38–12156–20	3 – 11
22F–12159–10	3 – 9
JR7–12180–10	3 – 1
JN6–12621–02	4 – 1
JN6–12651–01	4 – 3
JN6–12652–00	4 – 5
JR7–12658–00	4 – 4
JC0–13542–01	6 – 3
JC0–13567–00	5 – 4
JN6–13567–00	5 – 3
	5 – 5
JC0–13595–00	5 – 1
J0B–13750–01	6 – 1
J0B–13770–00	6 – 5
J0B–13907–01	14 – 9
52S–13938–00	6 – 6
J0B–13971–01	14 – 13
52B–14137–00	6 – 7
52B–14147–00	6 – 8
5CA–14147–00	6 – 9
3B4–14424–00	5 – 15
7KY–14613–01	7 – 3
JC0–15111–01	8 – 1
J38–15361–00	8 – 18
JT0–15362–00	33 – 30
796–15363–01	8 – 16
JN6–15411–10	8 – 8
JY2–15451–00	8 – 12
JT0–21481–00	9 – 5
J1A–23400–02	13 – 10
2NL–23448–00	12 – 9
2NL–23517–00	12 – 11
2HR–23526–00	10 – 43
	12 – 3
J1A–23527–01	13 – 20
JX4–23812–01	13 – 13
J1A–23822–00	13 – 28
J1A–23837–00	13 – 21
JR7–23844–00	13 – 19
JX4–2384N–00	13 – 12
JR7–23866–00	13 – 23
J1A–2387A–00	13 – 11
J1A–2387E–00	13 – 14
JR7–2387F–00	13 – 17
JR7–2387G–00	13 – 15
JR7–2387J–00	13 – 18
JR7–2387K–00	13 – 16
JR7–23894–00	13 – 24
4WM–24180–00	14 – 15
1S3–24486–00	14 – 11
JR7–2467K–00	13 – 22
J55–25357–00	17 – 18
J55–25358–00	17 – 5
J38–27204–00	17 – 4
J38–27205–00	17 – 17
JH2–27208–01	17 – 2
JH2–27209–01	17 – 15
J55–27260–00	17 – 23
J55–27270–00	17 – 10
JN9–27280–10	17 – 1
J10–27281–00	17 – 6
	17 – 19
J10–27282–00	17 – 7
	17 – 20
J10–27286–00	17 – 11
	17 – 24
JN9–27290–10	17 – 14
JB2–81670–00	33 – 16
JF2–81910–11	34 – 18
5EA–81952–00	34 – 26
J0B–82149–01	34 – 1
1S4–82310–02	33 – 19
JC0–82316–00	33 – 20
JN6–82370–00	33 – 25
JE8–82372–00	33 – 26
1C7–82380–00	6 – 2
JC0–82519–00	34 – 2
JN3–82617–01	22 – 17
JF7–82817–22	34 – 20
4P9–83591–00	33 – 32
JC0–85650–10	33 – 15
JT0–85720–01	33 – 27
JT0–85724–00	33 – 29
5CA–85886–00	33 – 1
J1J–E1166–00	1 – 16
JW8–E1923–00	21 – 5
J1J–E2634–00	4 – 9
J1J–E2691–00	4 – 7
J0B–E4411–01	5 – 14
J0B–E4412–00	5 – 11
J1J–E4413–00	5 – 16
J0B–E4430–10	7 – 7
J1J–E4435–00	33 – 2
J1J–E4437–00	5 – 20
J0B–E4451–01	5 – 12
J0B–E4453–01	5 – 22
JU0–E445E–00	5 – 13
J0B–E4710–03	7 – 1
JW1–E4713–00	7 – 4
J0B–E5471–00	5 – 18
JW8–E7688–01	20 – 7
J0B–F125J–00	11 – 28
1NS–F1338–00	34 – 34
JW8–F135J–00	19 – 7
	20 – 4
J1J–F1411–00	9 – 1
J1J–F1419–00	9 – 4
J1J–F1436–00	7 – 2
J0B–F1485–00	9 – 8
JW1–F1549–01	29 – 9
	29 – 15
J1J–F1566–00	27 – 31
J0B–F1738–00	11 – 9
	11 – 25
	27 – 18
J0B–F1738–00	27 – 23
	31 – 9
	31 – 11
J1J–F1781–00	27 – 27
J1J–F2110–00	10 – 1
J1B–F2127–00	11 – 12
	27 – 30
J1A–F2128–00	12 – 16
J0B–F2171–01	10 – 37
J0B–F2210–00	10 – 9
	10 – 22
5UG–F2465–10	34 – 33
J1J–F2501–00	11 – 1
J1J–F253B–00	11 – 4
J1J–F255G–00	11 – 2
J0B–F2574–00	21 – 53
J1B–F258E–00	11 – 10
J1J–F258R–00	11 – 13
J0B–F2873–01	27 – 25
J0B–F2874–01	27 – 26
J0B–F3123–10	11 – 17
J0B–F3133–10	11 – 21
J0G–F3145–00	16 – 49
J0B–F3147–20	24 – 17
JW8–F3183–00	16 – 17
J0B–F3350–00	12 – 14
J0B–F3390–00	12 – 19
J0B–F3447–00	27 – 2
	27 – 9
	27 – 22
J1A–F3511–00	12 – 4
J1A–F3512–00	12 – 5
J1A–F3521–00	12 – 12
J1A–F3570–00	12 – 1
J1A–F3811–00	13 – 1
J1A–F3828–00	13 – 4
1P0–F3833–00	13 – 25
J0B–F3838–00	13 – 6
J1A–F3841–00	13 – 26
JU0–F3857–20	13 – 3
	13 – 5
JC0–F4111–02	14 – 1
JW1–F4112–00	14 – 3
JW1–F414G–10	29 – 1
J1B–F4161–00	26 – 2
7CC–F4170–10	14 – 14
J0B–F417A–00	29 – 17
J1J–F419A–00	14 – 20
J0B–F4217–00	14 – 5
J1J–F4314–00	14 – 17
J1J–F4316–00	14 – 18
J1J–F4317–00	14 – 19
JU5–F4375–00	14 – 4
JW8–F4486–00	16 – 44
	16 – 48
J1J–F4491–00	14 – 10
JW1–F4610–11	14 – 2
JW8–F47E3–00	21 – 36
J1B–F5100–00	12 – 31
	23 – 5
J1A–F5103–00	12 – 21
J1A–F5118–00	12 – 29
JW8–F5118–00	23 – 7
J0B–F518F–00	23 – 9
J0B–F518G–00	23 – 10
J0B–F5310–10	23 – 1
J1J–F537W–00	10 – 16
	10 – 29
J0B–F53A1–01	10 – 10
	10 – 23
JW8–F5415–00	16 – 26
JW9–F5666–00	16 – 13
J0G–F5671–00	16 – 4
JW9–F5673–00	16 – 45
J1A–F5681–00	15 – 6
J1A–F5685–00	15 – 7
J0G–F5922–00	16 – 43
J0B–F6311–01	16 – 51
J0B–F6312–00	5 – 10
JW8–F6314–00	16 – 22
J1J–F6341–00	15 – 1
J1J–F6351–00	15 – 2
JW8–F639N–00	16 – 10
JW8–F7118–00	16 – 41
JW8–F7119–00	16 – 29
JW8–F7121–00	16 – 14
J0G–F7200–02	16 – 2
JW8–F7213–20	16 – 34
JW8–F7217–00	16 – 32
J0G–F7218–00	16 – 11
JW9–F7221–00	16 – 15
JW9–F7228–00	16 – 24
JU0–F722H–00	21 – 7
JW9–F7231–10	16 – 19
JW9–F7232–00	16 – 20
JU0–F723F–00	21 – 35
JW9–F7245–10	16 – 30
JW9–F7246–20	16 – 46
J0G–F7313–00	16 – 12
JW8–F7316–01	16 – 31
JW8–F7317–00	16 – 40
JW8–F7318–00	16 – 21
JW8–F7322–00	16 – 16
J0D–F7411–01	11 – 7
J0B–F7413–01	11 – 6
J0G–F7416–00	16 – 9
JW8–F7426–01	16 – 18
JW8–F7434–00	16 – 39
JW8–F7438–00	16 – 38
J0G–F7445–10	16 – 33
J0G–F7814–00	16 – 23
JW8–F7814–21	16 – 3
J0G–F7825–00	16 – 28
J0G–F7850–20	16 – 1
J0G–F7853–10	16 – 35
J0G–F7854–00	16 – 5
J0G–F7871–01	16 – 36
J0G–F7872–00	16 – 37
J1J–F7951–00	18 – 1
J1J–F7959–00	18 – 5
J0G–F815H–10	16 – 42
J1J–F8218–00	10 – 4
J1J–F8228–00	10 – 5
J1J–F8238–00	10 – 6
J1J–F8268–00	10 – 7
J1J–F8278–00	10 – 8
JW8–F8323–00	16 – 25
JW8–F8331–00	16 – 47
JW8–F8363–00	16 – 8
J0B–G1148–00	21 – 33
J0B–G1297–00	21 – 23
J0B–G2391–00	21 – 6
J1J–G2541–00	21 – 50
JC1–G2544–00	21 – 41
J0B–G3127–00	21 – 10
J0B–G3812–00	21 – 11
JW8–G4189–00	19 – 6
J0B–G5148–00	21 – 44
JW8–G5282–00	19 – 18
JW8–G5378–00	21 – 38
JW8–G5531–00	20 – 9
JW8–G5618–00	19 – 10
	19 – 15
JW8–G5621–00	19 – 16

PART NO.	REF. NO.
JW8–G5677–00	20 – 12
J0B–G580H–00	21 – 18
J0B–G6153–00	21 – 27
JW8–G6159–00	20 – 8
J0B–G6164–00	21 – 9
J0B–G6201–01	19 – 1
JW8–G6202–24	20 – 1
JW8–G6205–22	19 – 9
JW8–G6210–01	19 – 2
J0B–G6220–01	19 – 3
J0B–G6231–00	19 – 17
JW8–G6236–20	19 – 12
JW8–G6237–20	19 – 13
J0B–G6241–01	19 – 21
JW8–G624A–00	19 – 4
JW8–G624B–00	20 – 5
JW8–G6251–21	19 – 8
JW8–G6253–00	19 – 5
JW8–G6260–23	20 – 2
JW8–G6270–21	20 – 3
JW8–G6275–10	20 – 11
JW8–G6284–10	20 – 6
J0B–G6301–01	21 – 2
J0B–G6314–00	21 – 31
J0B–G6316–00	21 – 24
J0B–G6320–00	21 – 8
J0B–G6326–00	21 – 25
J0B–G6327–00	21 – 30
J0B–G633E–00	21 – 3
J0B–G633G–00	21 – 26
JN3–G6344–00	21 – 45
J0B–G6355–00	21 – 43
J0B–G6356–00	21 – 20
J0B–G6371–00	22 – 3
J0B–G6372–10	22 – 15
JW8–G6374–00	20 – 10
JN3–G6376–00	22 – 10
JU0–G6376–00	21 – 13
JN3–G6381–00	22 – 9
J1J–G6382–00	22 – 5
JW8–G6383–10	22 – 4
J0B–G638A–00	21 – 29
J0B–G638E–00	21 – 28
J0B–G6410–00	21 – 40
JN3–G6432–00	21 – 32
JW8–G6521–00	23 – 6
J0B–G6555–00	21 – 12
J1J–G6556–00	21 – 51

PART NO.	REF. NO.
J0B–G8330–00	22 – 2
J0B–H1100–00	32 – 1
J0B–H1111–00	32 – 13
J0B–H1115–00	32 – 17
J0B–H1119–00	32 – 12
J0B–H1139–00	32 – 14
J0B–H1150–00	32 – 9
J0B–H1157–00	32 – 16
J0B–H1158–00	32 – 6
J0B–H1160–00	32 – 10
J0B–H1161–00	32 – 4
J0B–H1163–00	32 – 8
J0B–H1165–00	32 – 5
J0B–H1166–00	32 – 11
J1J–H1170–00	33 – 4
J1J–H1171–00	33 – 12
JW1–H1173–02	33 – 14
J0B–H1353–00	32 – 2
J0B–H1554–00	32 – 15
J1J–H1950–00	34 – 25
JW1–H1950–00	34 – 14
J0D–H2114–00	34 – 39
J1J–H2115–00	34 – 8
J1J–H2116–00	34 – 9
J1J–H2117–00	34 – 10
J1J–H2133–00	34 – 4
J55–H2136–00	34 – 5
JN6–H2151–00	34 – 13
JU7–H2151–00	34 – 12
J0D–H21E0–03	34 – 36
J0D–H21E1–01	34 – 37
J0D–H21E2–01	34 – 38
J1B–H2370–00	26 – 13
JW1–H2510–00	34 – 41
JU2–H2511–00	34 – 43
J0B–H2534–00	32 – 3
JU6–H2569–00	34 – 44
5UG–H2579–00	34 – 42
J1J–H2590–00	34 – 11
JR1–H3383–02	34 – 22
J1J–H3386–00	34 – 23
JW8–H3530–00	34 – 45
J1J–H5546–00	33 – 34
J0B–H591A–10	33 – 33
J0B–HA906–00	32 – 7
J0B–K7115–00	13 – 36
J0B–K7145–20	24 – 8
J0B–K7146–20	24 – 9

PART NO.	REF. NO.
J0B–K7147–20	24 – 15
J0B–K7148–20	24 – 16
J0B–K7155–20	24 – 7
J0G–K7155–C0	24 – 5
J0G–K7156–C0	24 – 6
J0B–K7173–21	24 – 2
J0B–K7200–24	24 – 1
J0B–K7217–00	24 – 13
J0B–K7218–00	24 – 14
J0B–K7237–00	24 – 3
J0B–K7240–20	24 – 11
J0B–K7247–00	24 – 18
J0B–K7248–00	24 – 12
J0B–K7257–20	24 – 4
JW7–K7329–00	14 – 21
	27 – 17
J0B–K7363–00	13 – 35
J0B–K7387–00	13 – 33
JW1–K7387–00	29 – 11
J0B–K7510–01	25 – 1
J0B–K7529–20	24 – 10
J0B–K7540–00	25 – 7
JU0–K7573–00	26 – 3
J1J–K7741–00	27 – 28
J1K–K7762–10	13 – 37
J1K–K7762–20	13 – 37
J1B–K7768–10	26 – 8
J1B–K7768–20	26 – 8
J1B–K7768–30	26 – 8
J1B–K7768–40	26 – 8
J1B–K8111–10	27 – 1
J1B–K8111–20	27 – 1
J1B–K8111–30	27 – 1
J1B–K8111–40	27 – 1
J1B–K8111–50	27 – 1
J0B–K8111–A0	27 – 1
J1B–K8112–10	27 – 8
J1B–K8112–20	27 – 8
J1B–K8112–30	27 – 8
J1B–K8112–40	27 – 8
J1B–K8112–50	27 – 8
J0B–K8112–A0	27 – 8
J0B–K8114–10	26 – 6
J1B–K8115–10	26 – 1
J1B–K8115–20	26 – 1
J1B–K8115–30	26 – 1
J1B–K8115–40	26 – 1
J1B–K8115–50	26 – 1

PART NO.	REF. NO.
J0B–K8115–A0	26 – 1
JR1–K8139–00	27 – 29
J1J–K8141–00	27 – 19
J1J–K8141–10	27 – 19
J1J–K8141–20	27 – 19
J1J–K8141–30	27 – 19
J1J–K8141–40	27 – 19
J1J–K8141–50	27 – 19
J1B–K8164–00	25 – 2
J1B–K816M–00	11 – 26
J1B–K817H–00	27 – 35
J1B–K817J–00	27 – 36
J0B–K8187–00	28 – 13
J0B–K818A–00	28 – 2
J0B–K818B–00	28 – 5
J0B–K8191–00	28 – 8
J0B–K8192–00	28 – 10
J1J–K8197–00	28 – 12
J0B–K819H–00	27 – 13
J1A–K81A1–00	27 – 32
J1B–K81B1–00	27 – 33
JW1–K8214–00	29 – 13
J1B–K821A–00	11 – 16
J0B–K8233–10	26 – 14
J0B–K8237–02	27 – 21
J1B–K8243–00	26 – 17
J1B–K8244–00	26 – 19
J0B–K8245–00	31 – 4
J0B–K8246–00	31 – 5
J0B–K8247–00	31 – 6
J0B–K8248–00	31 – 7
J1J–K8251–00	27 – 6
J1J–K8252–00	11 – 14
J1J–K8253–00	14 – 22
J0B–K8254–00	10 – 38
J1J–K8255–00	27 – 24
J0B–K8256–00	11 – 18
J0B–K8257–00	11 – 19
J0B–K8258–00	11 – 20
J0B–K8259–00	11 – 22
J0B–K825A–00	11 – 23
J0B–K825E–00	11 – 24
J1B–K8271–00	28 – 1
J0B–K8273–10	26 – 16
J1B–K8282–00	26 – 9
J1J–K8297–10	27 – 34
J1J–K8297–20	27 – 34
J0B–K8312–00	29 – 4

PART NO.	REF. NO.
JW1–K8313–01	29 – 6
JW1–K8314–10	29 – 12
J1B–K832F–00	26 – 21
J1B–K832G–00	26 – 22
JW1–K8340–00	30 – 3
JW1–K834G–00	30 – 9
JN6–K8355–20	30 – 8
JF2–K8356–00	30 – 7
J0B–K8357–00	13 – 31
J0B–K8358–00	13 – 32
J0B–K835E–00	26 – 10
J0B–K8361–00	31 – 8
J0B–K8362–00	31 – 10
JN6–K8380–00	30 – 13
J0B–K8388–00	29 – 7
JU0–K8388–00	29 – 8
	29 – 14
JW1–K8388–00	29 – 5
J0B–K838A–20	24 – 19
JU0–K8398–00	29 – 10
	29 – 16
J0B–K8401–10	31 – 3
JW1–K8402–10	31 – 14
J1B–K8423–00	30 – 1
J1J–K8426–00	31 – 12
J1J–K8427–00	31 – 2
J0B–K84A0–00	29 – 2
J0B–K84A2–00	29 – 3
JN9–W2536–11	17 – 3
	17 – 16
90105–06057	5 – 19
90105–08260	20 – 14
90105–082A0	17 – 27
90105–10185	10 – 41
90105–10219	12 – 8
90105–10267	10 – 44
	12 – 13
	12 – 20
90105–10373	12 – 6
90105–13801	19 – 19
90109–08178	30 – 2
90109–08827	33 – 8
90110–06125	31 – 13
90110–06363	21 – 47
90110–06364	21 – 48
90111–05805	26 – 11
90113–04803	19 – 11
	19 – 14

PART NO.	REF. NO.
90113–08803	21 – 14
90114–12004	12 – 22
90114–12006	23 – 2
90170–05302	3 – 10
90170–10840	21 – 42
90176–06008	30 – 6
90179–05807	34 – 15
90179–08261	15 – 8
90179–08491	33 – 6
90179–08824	34 – 16
90179–12262	12 – 30
	23 – 4
90179–20016	23 – 3
90183–05008	26 – 12
90185–10012	10 – 42
90185–12008	13 – 7
90201–04810	13 – 34
90201–06020	30 – 5
90201–06089	21 – 49
90201–08043	33 – 7
90201–10057	1 – 5
	8 – 15
90201–10072	9 – 3
90201–121H8	17 – 12
	17 – 25
90201–121H9	17 – 13
	17 – 26
90201–18620	33 – 23
90201–19551	22 – 12
90201–20035	23 – 8
90201–201L9	22 – 11
90201–208H9	21 – 19
90201–208J0	21 – 21
90209–08013	20 – 13
90209–32271	12 – 27
90249–14129	15 – 10
90269–06804	26 – 5
	28 – 4
	28 – 7
	28 – 9
	28 – 11
90269–07805	26 – 18
	26 – 20
	27 – 5
	27 – 12
	27 – 20
90269–08001	26 – 7
90269–09003	11 – 8

PART NO.	REF. NO.
90269–09003	26 – 15
	28 – 3
	28 – 6
90269–10001	4 – 8
90280–04052	33 – 24
90338–40210	19 – 20
90340–12097	8 – 5
90381–17800	12 – 10
90381–17803	10 – 15
	10 – 28
90381–18001	12 – 2
90386–08141	18 – 3
90386–12800	16 – 27
90387–05069	16 – 55
90387–08100	20 – 15
90387–08116	14 – 8
90387–10868	10 – 39
90387–12016	12 – 15
90387–21801	12 – 25
90387–30800	10 – 14
	10 – 27
90450–56802	14 – 6
90461–14108	34 – 27
90462–05061	1 – 15
90464–09823	7 – 8
	34 – 29
90464–20005	34 – 30
90464–24230	15 – 5
90464–45804	14 – 16
	34 – 35
90464–70803	11 – 29
	34 – 31
90464–76800	28 – 14
90465–06038	22 – 18
90467–13806	1 – 19
90467–24140	5 – 21
90468–10049	5 – 8
	16 – 53
90468–20196	15 – 4
90480–20564	33 – 17
90501–10852	21 – 15
90501–264A9	3 – 5
90506–14001	17 – 9
	17 – 22
90506–20281	17 – 8
	17 – 21
90508–16460	16 – 54
90508–40678	18 – 4

PART NO.	REF. NO.
90520–02853	27 – 14
90520–02854	27 – 16
90520–02855	27 – 3
	27 – 10
90520–02856	27 – 15
90520–02857	27 – 4
	27 – 11
90520–20830	27 – 7
91402–20012	22 – 8
91490–25015	15 – 13
91702–05010	5 – 7
91702–05014	16 – 52
91702–06014	22 – 6
91702–08018	15 – 12
91702–10026	15 – 3
92012–06030	33 – 10
92017–06040	30 – 4
92902–06200	34 – 6
92902–06600	22 – 7
92902–08600	13 – 30
92902–10200	9 – 6
92902–12200	13 – 8
92990–06100	30 – 16
92990–06200	30 – 11
	30 – 15
93102–25868	21 – 17
93102–28805	10 – 40
93102–30803	12 – 26
93102–35014	8 – 3
	8 – 10
93104–11829	21 – 37
93106–38803	10 – 13
	10 – 26
93109–10820	21 – 34
93210–15414	33 – 31
93210–19001	10 – 21
	10 – 34
93210–22344	8 – 17
93306–005Y3	12 – 24
93306–006Y4	10 – 12
	10 – 25
93306–006Y9	10 – 11
	10 – 24
93306–007Y0	21 – 39
93306–20201	8 – 4
	8 – 11
93306–204X0	12 – 23
93306–20714	8 – 9

PART NO.	REF. NO.
93306–303Y6	21 – 4
93306–30709	8 – 2
93450–21053	2 – 5
93450–22119	23 – 11
93500–06826	21 – 16
93606–10842	21 – 22
94702–00348	1 – 8
95302–06600	18 – 2
	33 – 11
95302–06800	14 – 12
95302–08700	25 – 5
95302–18600	33 – 22
95307–08700	15 – 9
95602–06200	18 – 6
95602–08100	22 – 1
95602–08710	1 – 17
95602–10200	9 – 7
	9 – 9
	10 – 36
	10 – 45
	12 – 7
	25 – 8
95602–12200	10 – 18
	10 – 31
	13 – 9
95602–14100	12 – 28
95604–06200	21 – 46
95607–06200	16 – 6
95612–12100	12 – 18
95622–08618	1 – 7
95680–06100	30 – 12
95702–06500	34 – 7
95702–08500	5 – 2
	7 – 6
	10 – 20
	10 – 33
	33 – 9
95802–06020	4 – 2
	4 – 6
95802–06040	31 – 1
95812–06012	26 – 4
95812–06025	6 – 10
95812–08020	13 – 2
	16 – 50
95812–08040	11 – 3
	33 – 5
95812–08045	8 – 13
95812–08060	10 – 19

PART NO.	REF. NO.
95812–08060	10 – 32
95812–10016	10 – 2
95812–10020	9 – 2
	10 – 3
	21 – 1
95812–10040	13 – 27
95812–10055	10 – 35
95812–12030	33 – 3
95812–12055	10 – 17
	10 – 30
95812–12080	12 – 17
95817–08025	14 – 7
95822–06012	25 – 6
	33 – 28
	34 – 3
	34 – 17
95822–06016	33 – 18
	33 – 21
95822–06030	1 – 14
95D02–06016	5 – 6
95D32–06012	22 – 16
	34 – 19
95D32–06016	34 – 28
	34 – 40
95D32–08016	11 – 5
	11 – 11
	11 – 15
	21 – 52
	25 – 3
	34 – 32
95D32–08020	7 – 5
	33 – 13
95D32–08030	11 – 27
95D32–08050	25 – 4
97012–06020	16 – 7
97012–08030	13 – 29
97012–10050	8 – 14
97012–10070	1 – 4
97080–06020	30 – 10
97580–06540	31 – 15
97602–04316	22 – 14
97602–05225	34 – 21
97702–50016	5 – 23
97702–60416	5 – 17
98502–06014	6 – 4
98580–06010	30 – 14
99002–07600	5 – 9
99002–09600	15 – 11

PART NO.	REF. NO.
99009–19400	22 – 13
99530–08016	8 – 7
99530–14016	1 – 6

PART NO.	REF. NO.