YAMAHA

PARTS CATALOGUE

DR2A17 EFI (J0B1) CANADA, EUROPE, OTHERS

YAMAHA GENUINE Parts & Accessories

NEWS No.	DATE	COMMENT
PE0-GC-160004	Nov.,28,2016	COR:FIG.30/31 SEAT LIST&ILLUST CORRECTION
PE0-GC-170009	Dec.,28,2017	COR:FIG.15/21/23/35/36/37 LIST&ILLUSTRATION CORRECTION

1SJ0B-100E1

( )

2018/01/10

DR2A17 EFI
PARTS CATALOGUE
©2016 by Yamaha Motor Co., Ltd.
1st edition, August 2016
All rights reserved.
Any reprinting or unauthorized use
without the written permission of
Yamaha Motor Co., Ltd.
is expressly prohibited.
Printed in Japan.

FOREWORD

This Parts Catalogue is related to the parts for the model(s) on the cover page. When you are ordering replacement parts, please refer to this Parts Catalogue and quote both part numbers and part names correctly.

1. Modifications or additions which have been made after the issue of the Parts Catalogue will be announced in the Parts News.
   It is advisable that you make the necessary corrections to the Parts Catalogue according to the Parts News.

2. Abbreviations
   The following abbreviations are used in this Parts Catalogue.

   “UR” Use specified parts number.

   “UN” Use as many as needed.

   “AP” Alternate Parts

   “LM” Locally Made (Parts need to be ordered locally)

   “F#” Frame No. (Applicable machine No.)

   “O/S” Over Size

3. The number of components for assembly
   - Parts, which are to be supplied in an assembly, are listed with a dot (.) in front of the part name as shown below.
   - The numeral appearing to the right of each component part indicates the quantity of parts for each assembly unit.

PART NO.	DESCRIPTION	Q’TY	REMARKS
2F5–83310–60	FRONT FLASHER LIGHT ASSY	2	
115–83311–60	.BULB (6V–18W)	1	

4. Applicable colours of graphics are represented in the “REMARKS” as shown below.

PART NO.	DESCRIPTION	Q’TY	REMARKS
2N4–24110–00–X5	FUEL TANK COMP.	2	MXR
3J1–24240–10	.GRAPHIC, FUEL TANK	1	FOR MXR

5. Note that the illustrations for reference in finding parts numbers are not to be used for assembling. When assembling, please use the applicable service manual.

6. The asterisk (*) before a reference number indicates modified items after the first edition.

7. Applicable Serial No.

Engine Serial No.

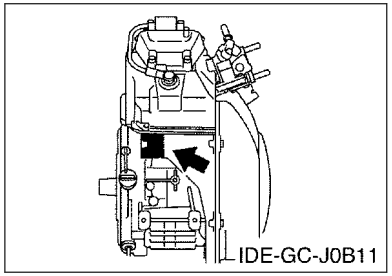

Frame Serial No.

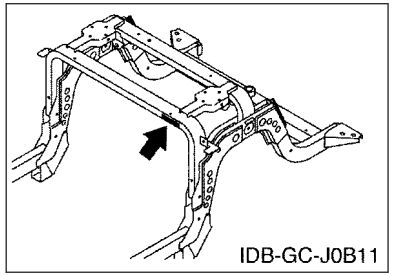

8. Applicable Colour Code (The (*) mark shows Model colour.)

Abbreviation	Colour Name	Colour Code
BW1(*)	BLUISH WHITE 1	1571
DNBME(*)	DARK GRAYISH BLUE METALLIC E	0866
DNMC(*)	DARK GRAY METALLIC C	0922
DYNM2(*)	DARK YELLOWISH GRAY METALLIC 2	1509
HTR(*)	HEAT RED	00EY
LNMP(*)	LIGHT GRAY METALLIC P	0925
LNYM8(*)	LIGHT GRAYISH YELLOW ME 8	1047
NYS4(*)	GRAYISH YELLOW SOLID 4	1459
VDGS1(*)	VERY DARK GREEN SOLID 1	0614

9. Quantity Column Information

Column No.	Name Of Q'ty Column	Destination
1	J0B1	CANADA, EUROPE, OTHERS

10. Applicable Starting Serial No.

Frame Serial No.

Serial No.	Name Of Q'ty Column	Model Code
J0B-000101	J0B1	J0B1

CONTENTS

ENGINE 1 1

ENGINE

CYLINDER HEAD 2
CRANKSHAFT & PISTON 3
CAMSHAFT & VALVE 4
AIR SHROUD & FAN 5
INTAKE 1 6
INTAKE 2 7
EXHAUST 8
CRANKCASE 9

BODY

ENGINE BRACKET 10
REAR ARM & SUSPENSION 11
FRAME 13
FRONT SUSPENSION & WHEEL 15
STEERING 17
FUEL TANK 19
PEDAL WIRE 20
PEDAL ASSEMBLY 21
BRAKE 23
GOVERNOR 24

DRIVE

PRIMARY SHEAVE 25
SECONDARY SHEAVE 26
TRANSMISSION 27
SHIFTER & CABLES 29
REAR AXLE & WHEEL 30
BUMPER 31
BODY 32
BODY 2 34
BODY FITTING 37
CARRIER 38
SEAT 39

ELECTRICAL

STARTING MOTOR 40
ELECTRICAL 1 42
ELECTRICAL 2 44
ALTERNATE FOR WINDSHIELD 46
ALTERNATE FOR SUN ROOF 47

INDEX

NUMERICAL INDEX 48

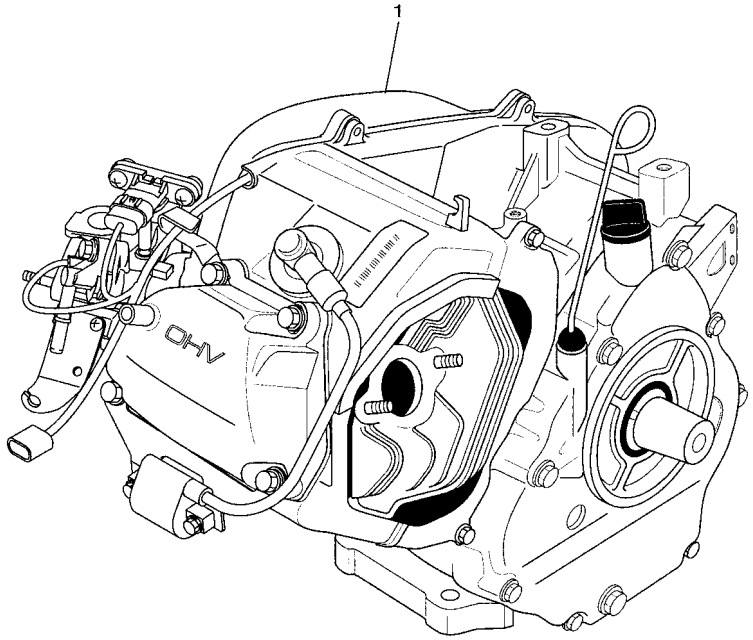

JC04110-L010

FIG. 1 ENGINE 1

REF. NO.	PART NO.	DESCRIPTION	J0B1					REMARKS
1	J0B–19001–10	ENGINE ASSEMBLY	1					

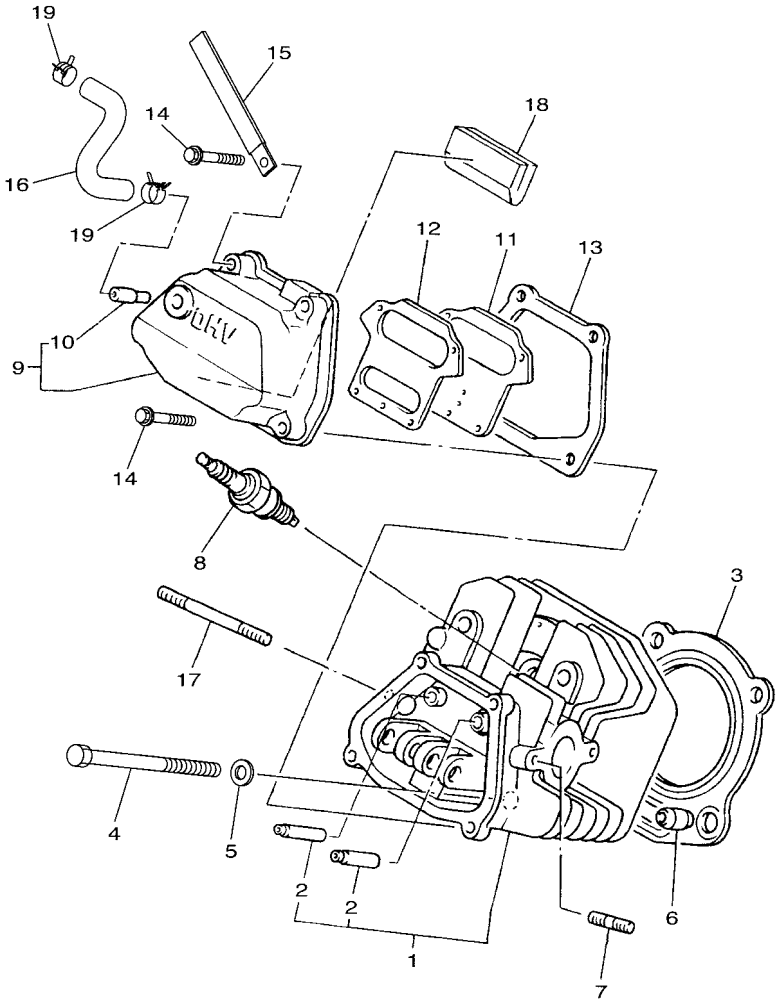

J0B1110-S010

FIG. 2 CYLINDER HEAD

REF. NO.	PART NO.	DESCRIPTION	J0B1					REMARKS
1	JT0–11111–00	HEAD, CYLINDER 1	1					
2	JN6–11133–10	.GUIDE, VALVE 1	2					
3	JT0–11181–00	GASKET, CYLINDER HEAD 1	1					
4	97012–10070	BOLT	4					
5	90201–10057	WASHER, PLATE	4					
6	99530–14016	PIN, DOWEL	2					
7	95622–08618	BOLT, STUD	2					
8	94702–00348	PLUG, SPARK (NGK-BPR2ES)	1					STD
	94702–00343	PLUG, SPARK (NGK BP4ES)	1					AP
9	JN6–11191–01	COVER, CYLINDER HEAD 1	1					
10	JN6–11116–00	.JOINT, BREATHER	1					
11	JN6–11168–00	COVER, BREATHER	1					
12	JN6–11169–00	GASKET, BREATHER COVER	1					
13	JN6–11193–00	GASKET, HEAD COVER 1	1					
14	95822–06030	BOLT, FLANGE	4					
15	90462–05061	CLAMP	1					
16	J0B–E1166–00	PIPE, BREATHER 1	1					
17	95602–08710	BOLT, STUD	2					
18	JR7–11163–10	ELEMENT	1					
19	90467–13847	CLIP	2					

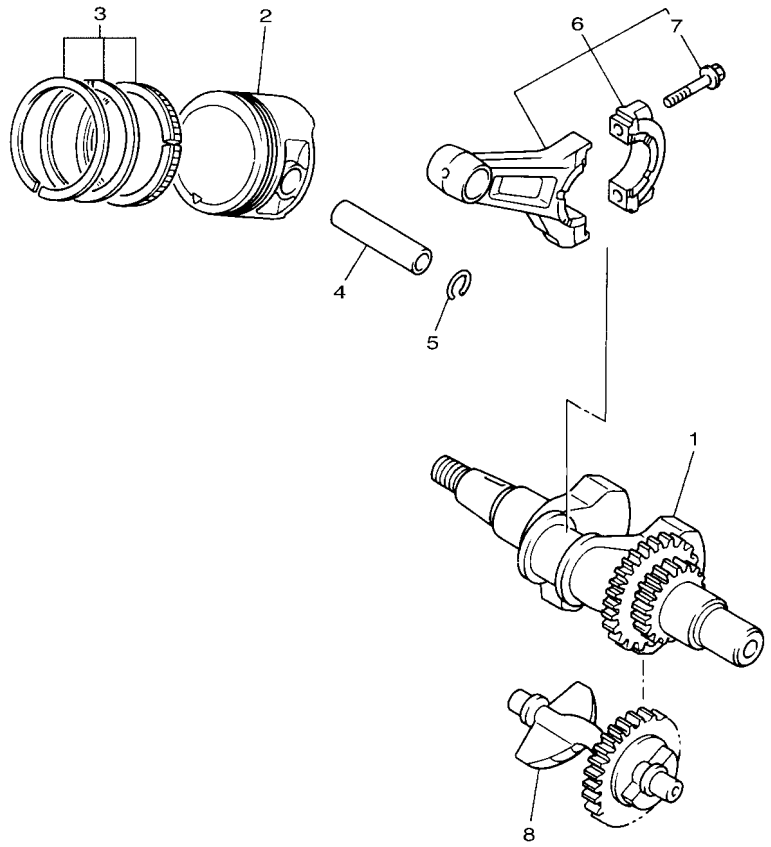

JN7010-6021

FIG. 3 CRANKSHAFT & PISTON

REF. NO.	PART NO.	DESCRIPTION	J0B1					REMARKS
1	JN6–11400–00	CRANKSHAFT ASSY	1					
2	JR7–11631–00–A0	PISTON (STD)	1					
	JR7–11635–00	PISTON (0.25MM O/S)	1					AP
	JR7–11636–00	PISTON (0.50MM O/S)	1					AP
3	JR7–11610–00	PISTON RING SET (STD)	1					
	JR7–11610–10	PISTON RING SET (0.25MM O/S)	1					AP
	JR7–11610–20	PISTON RING SET (0.50MM O/S)	1					AP
4	583–11633–00	PIN, PISTON	1					
5	93450–21053	CIRCLIP	2					
6	JN6–11650–10	CONNECTING ROD ASSY	1					
7	JN6–11654–10	.BOLT, CONNECTING ROD	2					
8	JN6–11454–10	WEIGHT 1	1					

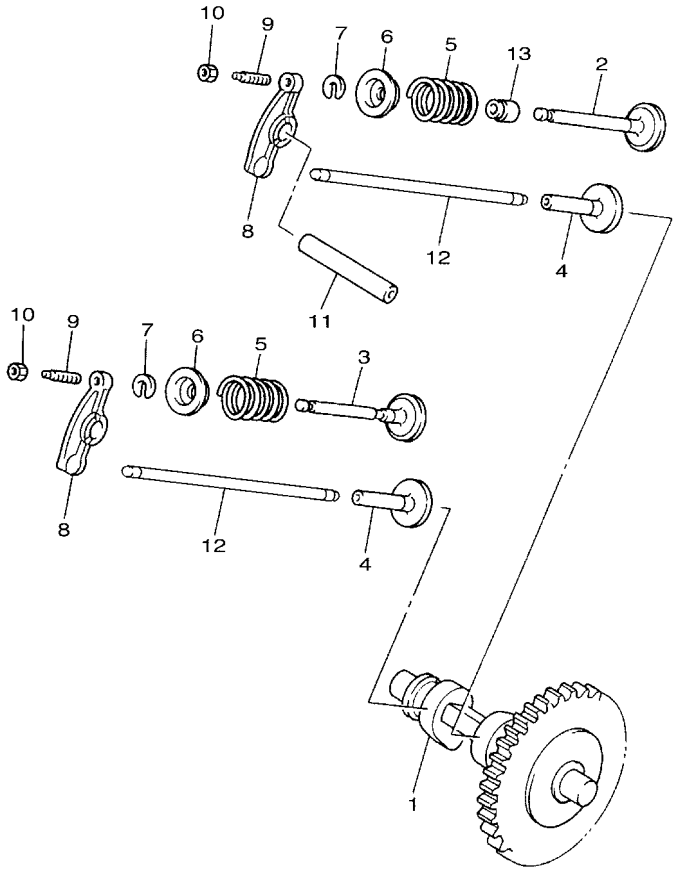

JD13110-K030

FIG. 4 CAMSHAFT & VALVE

REF. NO.	PART NO.	DESCRIPTION	J0B1					REMARKS
1	JR7–12170–00	CAMSHAFT ASSY 1	1					
2	JN6–12111–10	VALVE, INTAKE	1					
3	7RH–12121–10	VALVE, EXHAUST	1					
4	JN6–12153–10	LIFTER, VALVE	2					
5	90501–264A9	SPRING, COMPRESSION	2					
6	J38–12117–01	RETAINER, VALVE SPRING	2					
7	J38–12118–00	LOCK, VALVE SPRING RETAINER	2					
8	JN6–12151–10	ARM, VALVE ROCKER	2					
9	22F–12159–10	SCREW, VALVE ADJUSTING	2					
10	90170–05302	NUT	2					
11	J38–12156–20	SHAFT, ROCKER 2	1					
12	JR7–12154–10	ROD, VALVE PUSH	2					
13	4G0–12119–00	SEAL, VALVE STEM	1					

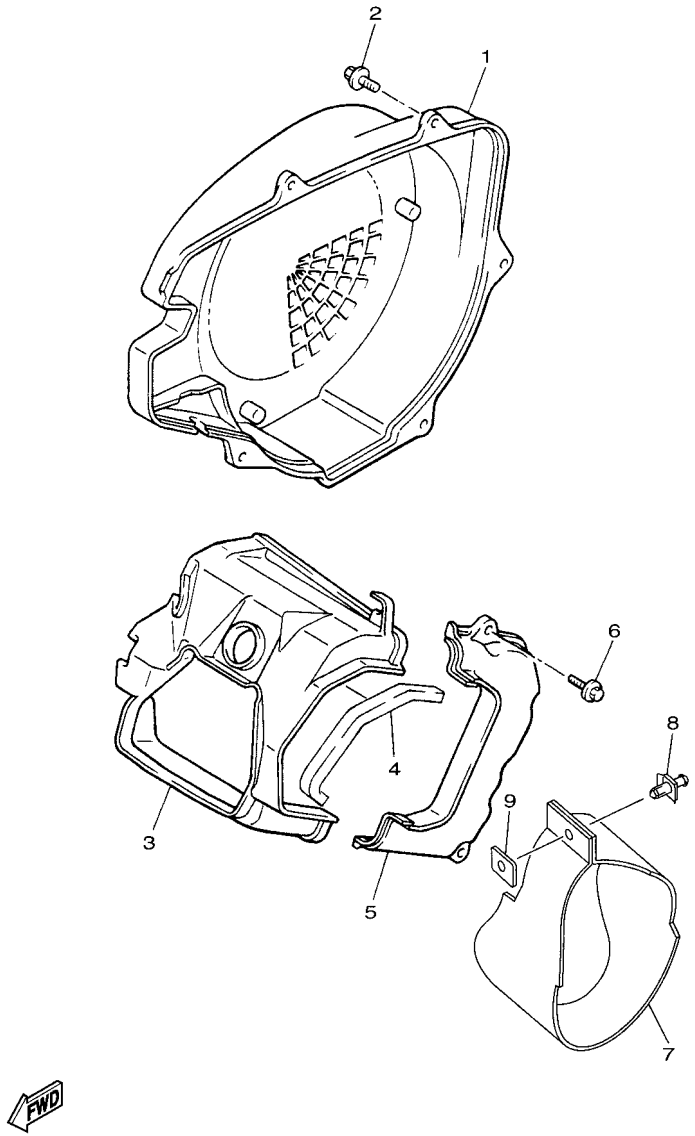

J0B1110-S040

FIG. 5 AIR SHROUD & FAN

REF. NO.	PART NO.	DESCRIPTION	J0B1					REMARKS
1	JN6–12621–02	CASE, FAN	1					
2	95802–06020	BOLT, FLANGE	4					
3	JN6–12651–01	AIR SHROUD, CYLINDER 1	1					
4	JR7–12658–00	DAMPER, AIR SHROUD 1	1					
5	JN6–12652–00	AIR SHROUD, CYLINDER 2	1					
6	95802–06020	BOLT, FLANGE	2					
7	J0B–E2691–00	DUCT 1	1					
8	90269–10001	RIVET	1					
9	JR7–12634–00	PLATE 2	1					

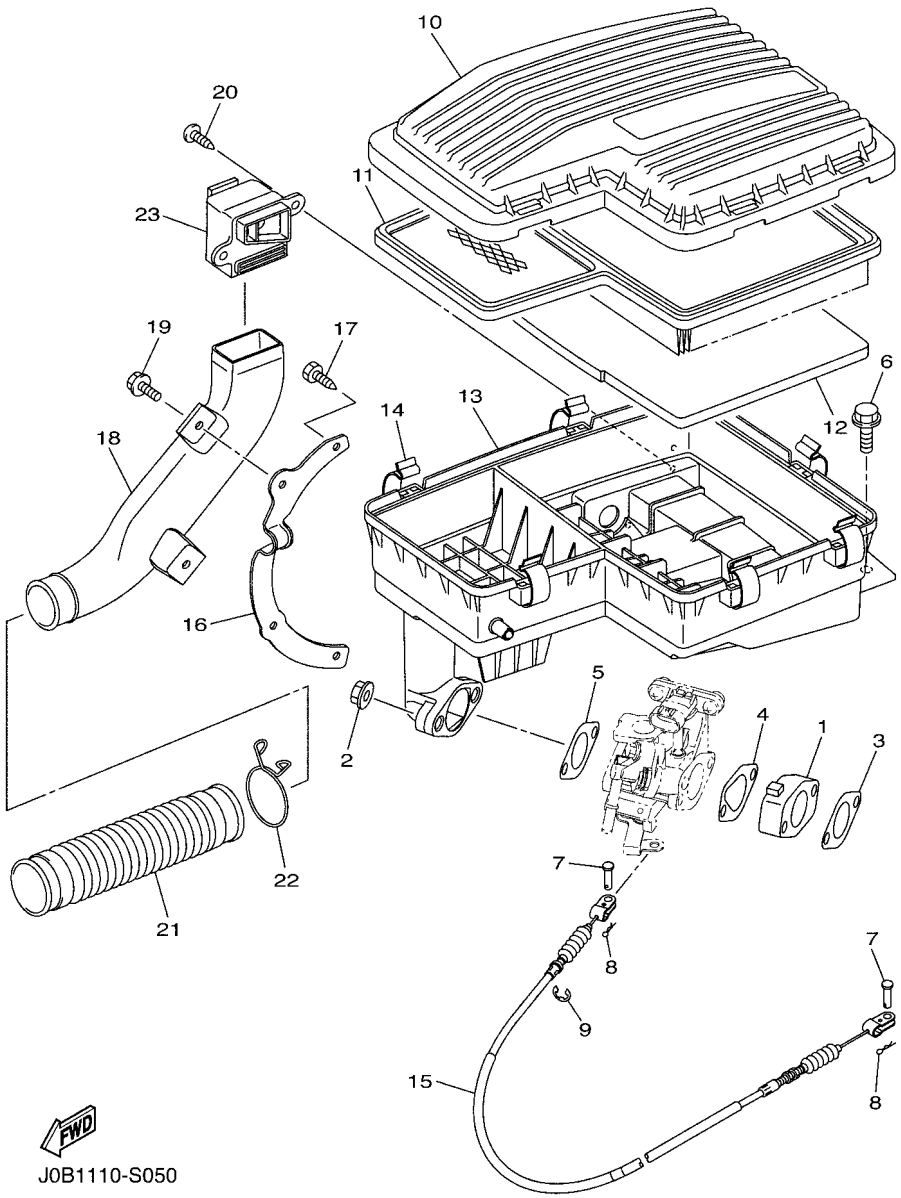

J0B1110-S050

FIG. 6 INTAKE 1

REF. NO.	PART NO.	DESCRIPTION	J0B1					REMARKS
1	JC0–13595–00	JOINT	1					
2	95702–08500	NUT, FLANGE	2					
3	JN6–13567–00	GASKET	1					
4	JC0–13567–00	GASKET	1					
5	JN6–13567–00	GASKET	1					
6	95802–06016	BOLT, FLANGE	2					
7	91702–05010	PIN, CLEVIS	2					
8	90468–10049	CLIP	2					
9	99001–07600	CIRCLIP	1					
10	J0B–E4412–00	CAP, CLEANER CASE 1	1					
11	J0B–E4451–01	ELEMENT, AIR CLEANER	1					
12	JU0–E445E–00	FILTER 1	1					
13	J0B–E4411–01	CASE, AIR CLEANER 1	1					
14	3B4–14424–00	CLIP, CAP FITTING	7					
15	J0B–F6312–00	CABLE, THROTTLE 2	1					
16	J0B–E4413–00	STAY	1					
17	97702–60416	SCREW, TAPPING	2					
18	J0B–E5471–00	DUCT, AIR	1					
19	90105–06057	BOLT, FLANGE	2					
20	97702–50016	SCREW, TAPPING	2					
21	J0B–E4437–00	DUCT	1					
22	90467–24140	CLIP	1					
23	J0B–E4453–01	JOINT, AIR CLEANER 1	1					

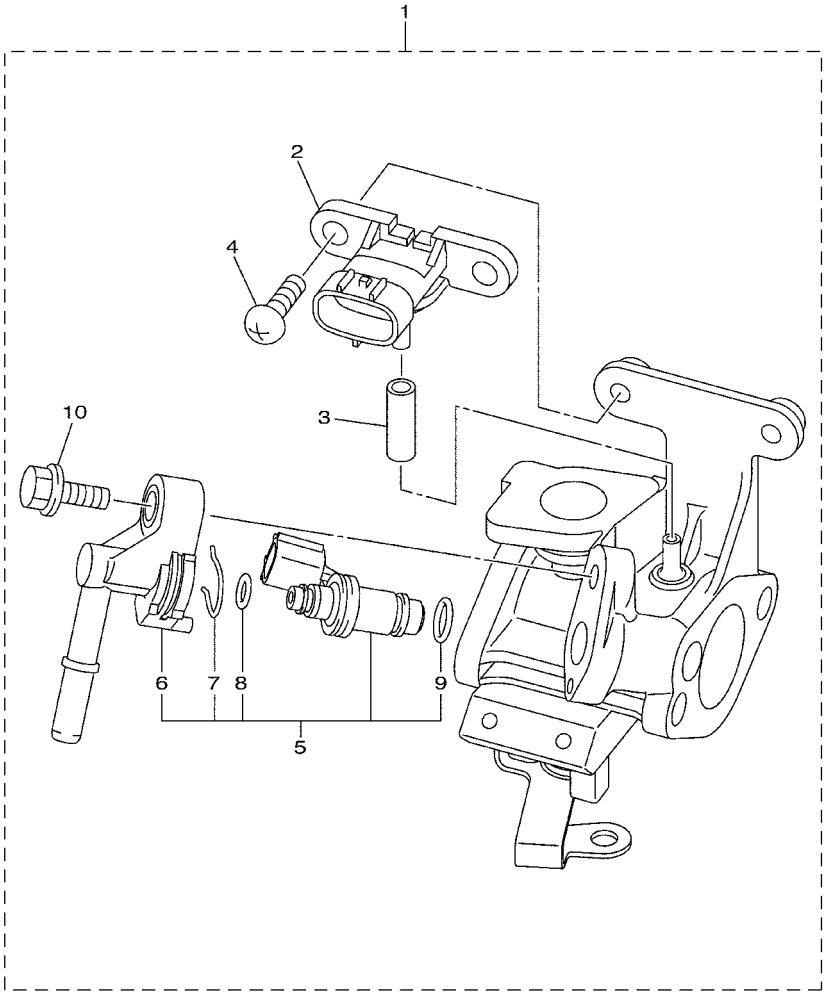

J0B1110-S061

FIG. 7 INTAKE 2

REF. NO.	PART NO.	DESCRIPTION	J0B1					REMARKS
1	J0B–13750–00	THROTTLE BODY ASSY	1					
2	1C7–82380–00	.SENSOR, PRESSURE	1					
3	JC0–13542–00	.HOSE, VACUUM SENSING 1	1					
4	98502–06014	.SCREW, PAN HEAD	2					
5	J0B–13770–00	.INJECTOR ASSY	1					
6	52S–13938–00	..PIPE	1					
7	52B–14137–00	..CLIP	1					
8	52B–14147–00	..O-RING	1					
9	5CA–14147–00	..O-RING	1					
10	95812–06025	.BOLT, FLANGE	1					

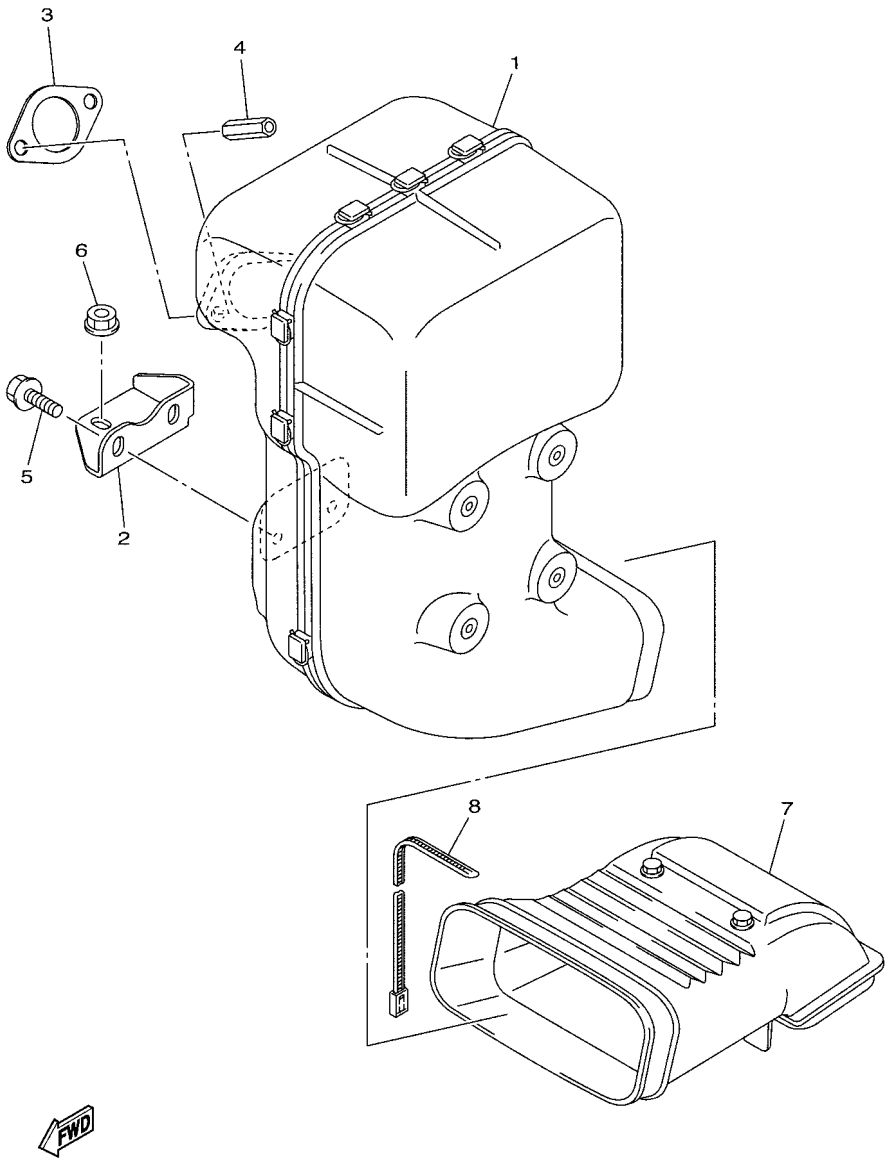

J0B1110-S070

FIG. 8 EXHAUST

REF. NO.	PART NO.	DESCRIPTION	J0B1					REMARKS
1	J0B–E4710–01	MUFFLER ASSY 1	1					
2	J0B–F1436–00	BRKT., MUFF. 2	1					
3	7KY–14613–01	GASKET, EXHAUST 1	1					
4	JW1–E4713–00	NUT, MUFFLER JOINT	2					
5	95822–08020	BOLT, FLANGE	2					
6	95702–08500	NUT, FLANGE	1					
7	J0B–14430–00	DUCT ASSY	1					
8	90464–09823	CLAMP	1					

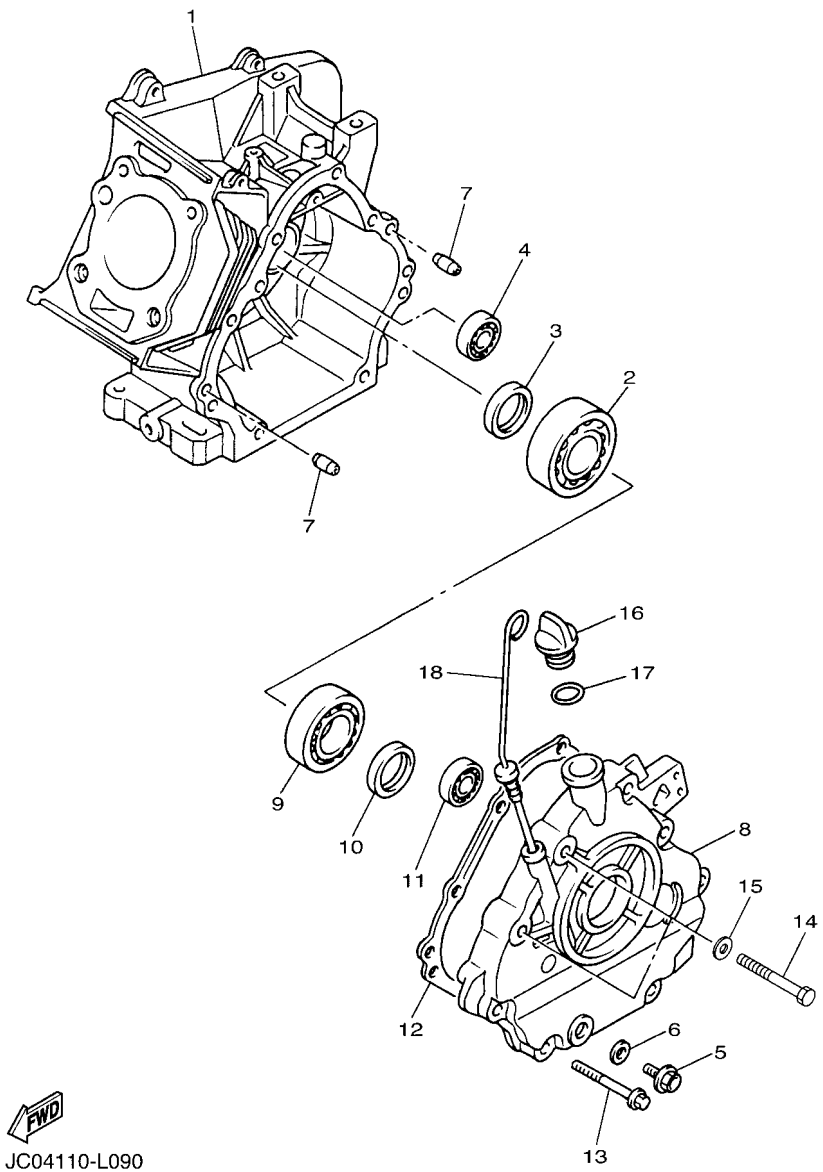

FIG. 9 CRANKCASE

REF. NO.	PART NO.	DESCRIPTION	J0B1					REMARKS
1	JC0–15111–01	CRANKCASE 1	1					
2	93306–30709	BEARING	1					
3	93102–35014	OIL SEAL	1					
4	93306–20201	BEARING	1					
5	90340–12097	PLUG, STRAIGHT SCREW	1					
6	812–11198–00	GASKET	1					
7	99530–08016	PIN, DOWEL	2					
8	JN6–15411–01	COVER, CRANKCASE 1	1					
9	93306–20714	BEARING	1					
10	93102–35014	OIL SEAL	1					
11	93306–20201	BEARING	1					
12	JY2–15451–00	GASKET, CRANKCASE COVER 1	1					
13	95812–08045	BOLT, FLANGE	6					
14	97012–10050	BOLT	2					
15	90201–10057	WASHER, PLATE	2					
16	796–15363–01	PLUG, OIL	1					
17	93210–22344	O-RING	1					
18	J38–15361–00	GAUGE, LEVEL	1					

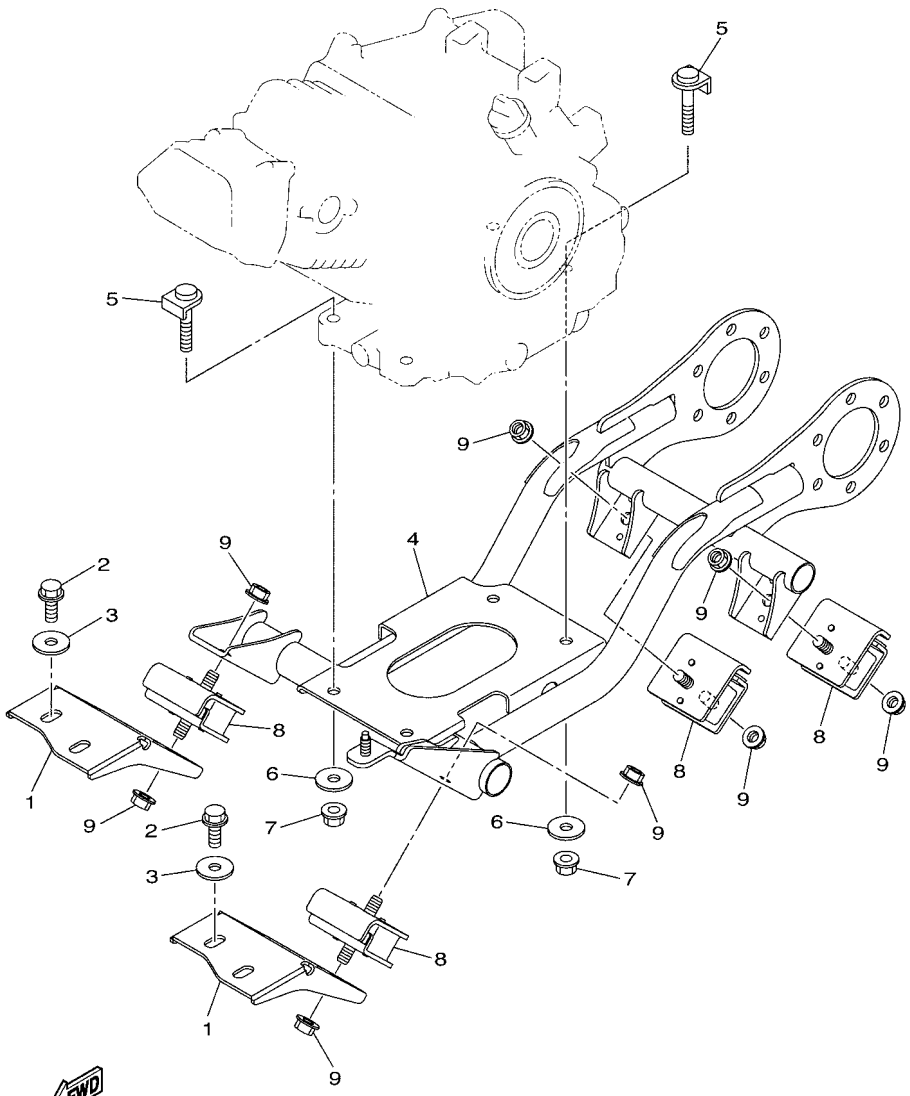

J0B1110-S090

FIG. 10 ENGINE BRACKET

REF. NO.	PART NO.	DESCRIPTION	J0B1					REMARKS
1	J0B–F1411–00	BRACKET, ENGINE 1	2					
2	95812–10020	BOLT, FLANGE	4					
3	90201–10072	WASHER, PLATE	4					
4	J0B–F1419–01	BRACKET, ENGINE 2	1					
5	JT0–21481–00	BOLT, ENGINE MOUNTING 1	4					
6	92902–10200	WASHER	4					
7	95602–10200	NUT, S/L FLANGE	4					
8	J0B–F1485–00	DAMPER, RUBBER 1	4					
9	95602–10200	NUT, S/L FLANGE	8					

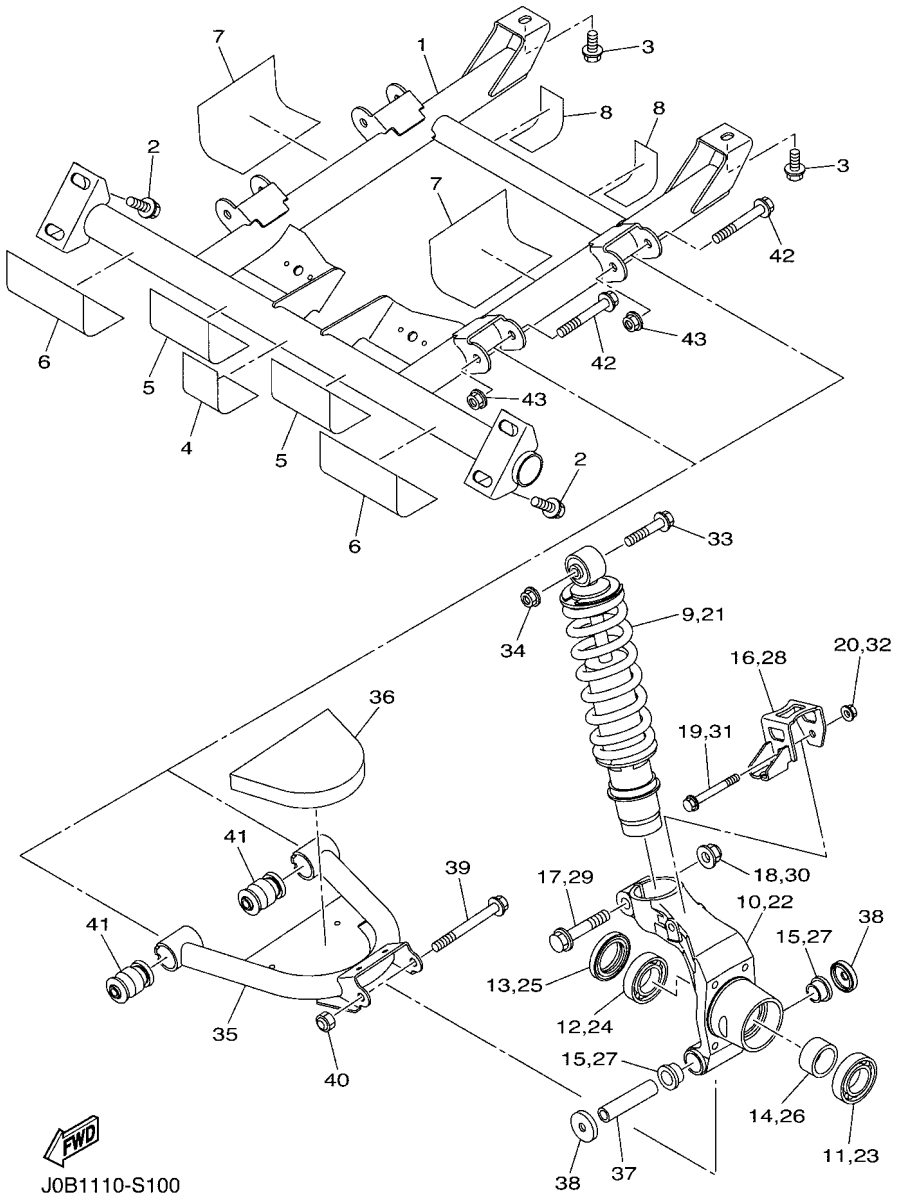

FIG. 11 REAR ARM & SUSPENSION

REF. NO.	PART NO.	DESCRIPTION	J0B1					REMARKS
1	J0B–F2110–02	REAR ARM COMP.	1					
2	95822–10020	BOLT, FLANGE	4					
3	J0B–F1531–00	BOLT	2					
4	J0B–F8218–00	SEAL 1	1					
5	J0B–F8228–00	SEAL 2	2					
6	J0B–F8238–00	SEAL 3	2					
7	J0B–F8268–00	SEAL 4	2					
8	J0B–F8278–00	SEAL 5	2					
9	J0B–F2210–00	SHOCK ABSORBER ASSY, REAR	1					
10	J0B–F53A1–01	KNUCKLE, REAR	1					
11	93306–00622	BEARING	1					
12	93306–006Y4	BEARING	1					
13	93106–38046	OIL SEAL	1					
14	J0B–F3113–00	COLLAR	1					
15	90381–17800	BUSH, SOLID	2					
16	J0B–F537W–00	BRACKET 1	1					
17	95812–12055	BOLT, FLANGE	1					
18	95602–12200	NUT, SELF-LOCKING	1					
19	95812–08060	BOLT, FLANGE	1					
20	95702–08500	NUT, FLANGE	1					
21	J0B–F2210–00	SHOCK ABSORBER ASSY, REAR	1					
22	J0B–F53A1–01	KNUCKLE, REAR	1					
23	93306–00622	BEARING	1					
24	93306–006Y4	BEARING	1					
25	93106–38046	OIL SEAL	1					
26	J0B–F3113–00	COLLAR	1					
27	90381–17800	BUSH, SOLID	2					

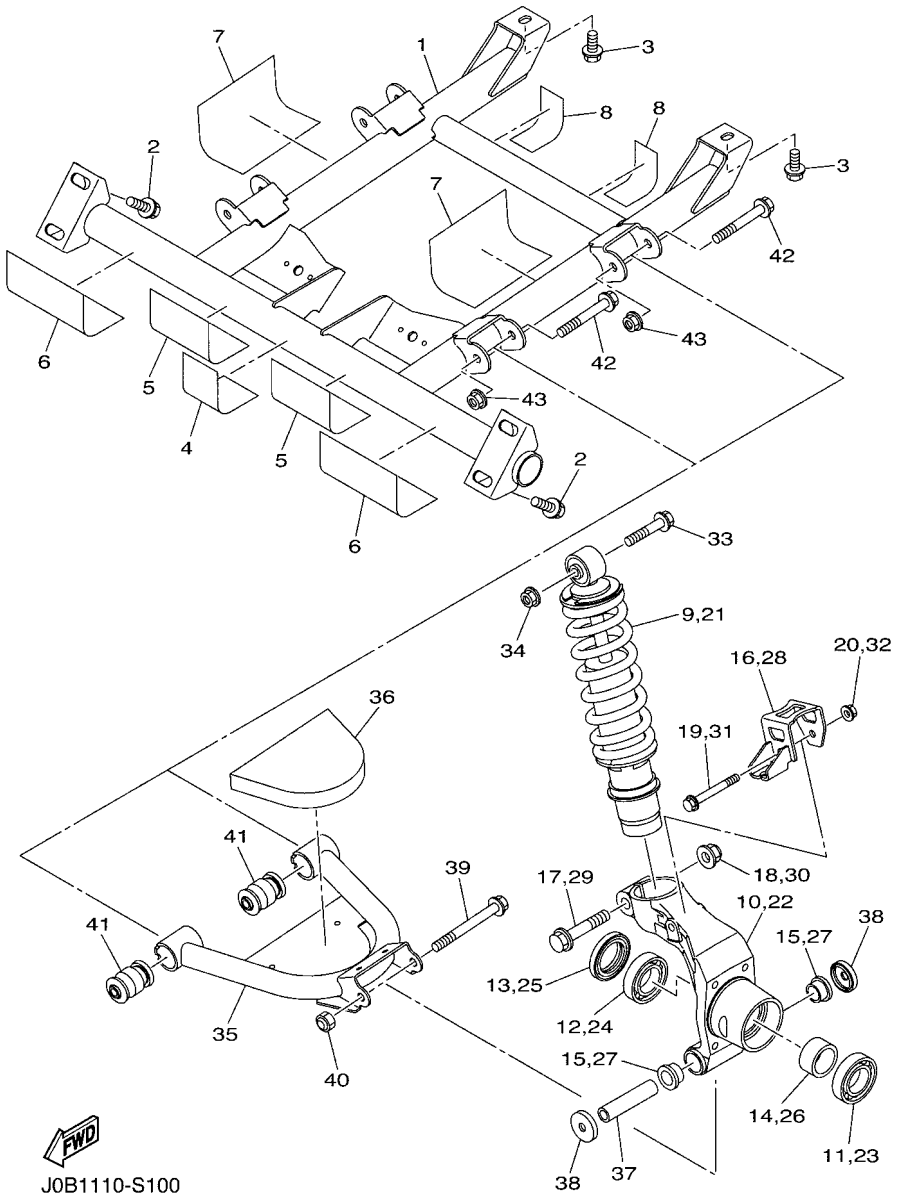

FIG. 11 REAR ARM & SUSPENSION

REF. NO.	PART NO.	DESCRIPTION	J0B1					REMARKS
28	J0B–F537W–00	BRACKET 1	1					
29	95812–12055	BOLT, FLANGE	1					
30	95602–12200	NUT, SELF-LOCKING	1					
31	95812–08060	BOLT, FLANGE	1					
32	95702–08500	NUT, FLANGE	1					
33	95812–10055	BOLT, FLANGE	2					
34	95602–10200	NUT, S/L FLANGE	2					
35	J0B–F2171–01	ARM, REAR 1	2					
36	J0B–K8254–00	PAD, SILENCER 4	2					
37	5KM–23448–00	SPACER	2					
38	5UG–23517–10	COVER, THRUST 1	4					
39	90105–10185	BOLT, FLANGE	2					
40	90185–10012	NUT, SELF-LOCKING	2					
41	2HR–23526–00	BUSH	4					
42	90105–10267	BOLT, FLANGE	4					
43	95602–10200	NUT, S/L FLANGE	4					

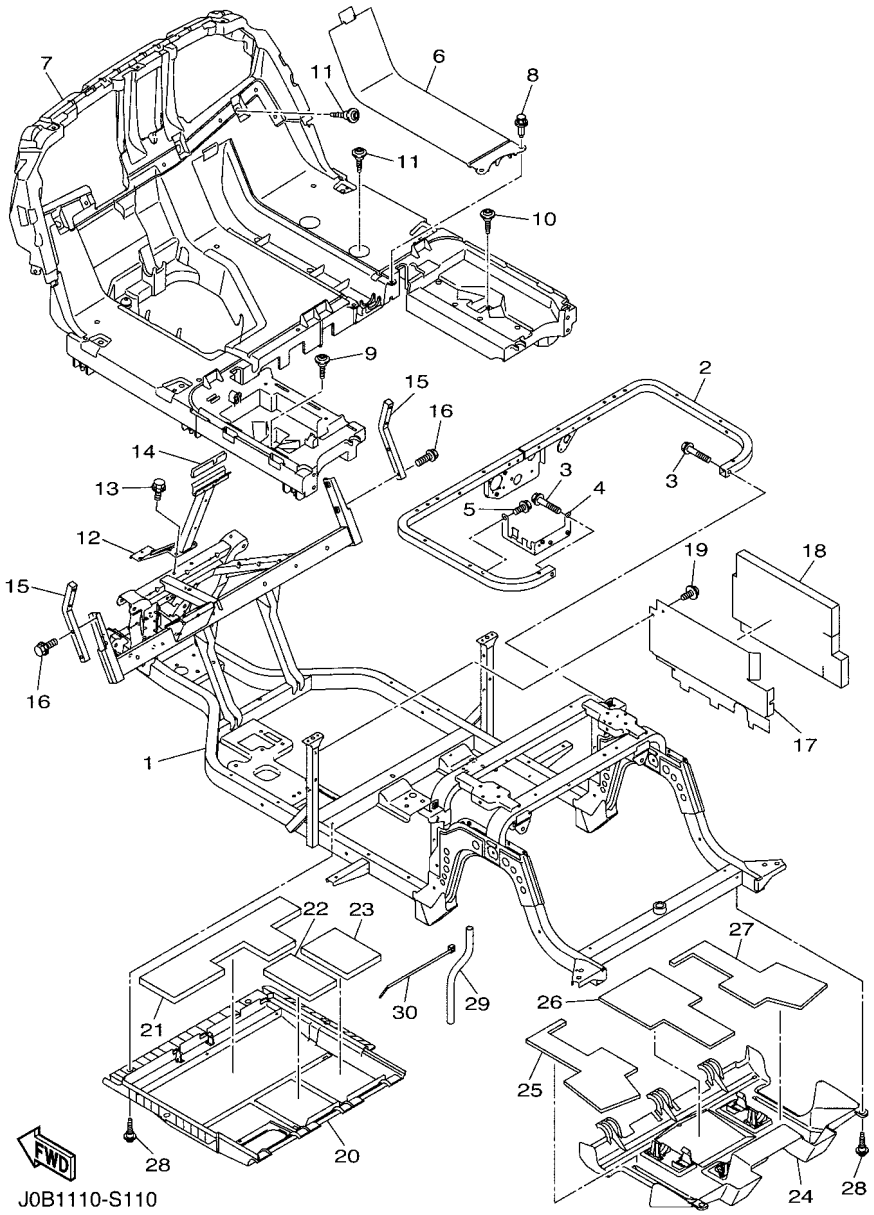

FIG. 12 FRAME

REF. NO.	PART NO.	DESCRIPTION	J0B1					REMARKS
1	J0B–F2501–00	FRAME COMP.	1					
2	J0B–F255G–00	MEMBER, SEAT SUPPORT	1					
3	95812–08040	BOLT, FLANGE	2					
4	J0B–F253B–00	STAY, RELAY	1					
5	90105–08867	BOLT, FLANGE	1					
6	J0B–F7413–01	COVER, FOOTREST	1					
7	J0B–F7411–01	FOOTREST 1	1					
8	90269–09003	RIVET	2					
9	J0B–F1738–00	BOLT	1					
10	J0B–F1738–00	BOLT	1					
11	J0B–F1738–00	BOLT	7					
12	J0B–F258E–00	SUPPORT, FRONT COWL	1					
13	90105–08867	BOLT, FLANGE	2					
14	J0B–F2127–00	SHIM	1					
15	J0B–K816M–00	REAR STORAGE BOX COMP.	2					
16	90105–088B6	BOLT, FLANGE	4					
17	J0B–F258R–00	PLATE, BATTERY 3	1					
18	J0B–K8252–00	PAD, SILENCER 2	1					
19	90105–08867	BOLT, FLANGE	2					
20	J0B–F3123–01	COVER, UNDER 1	1					
21	J0B–K8256–00	PAD, SILENCER 6	1					
22	J0B–K8257–00	PAD, SILENCER 7	1					
23	J0B–K8258–00	PAD, SILENCER 8	1					
24	J0B–F3133–02	COVER, LOWER 2	1					
25	J0B–K8259–00	PAD, SILENCER 9	1					
26	J0B–K825A–00	PAD, SILENCER 10	1					
27	J0B–K825E–00	PAD, SILENCER 11	1					

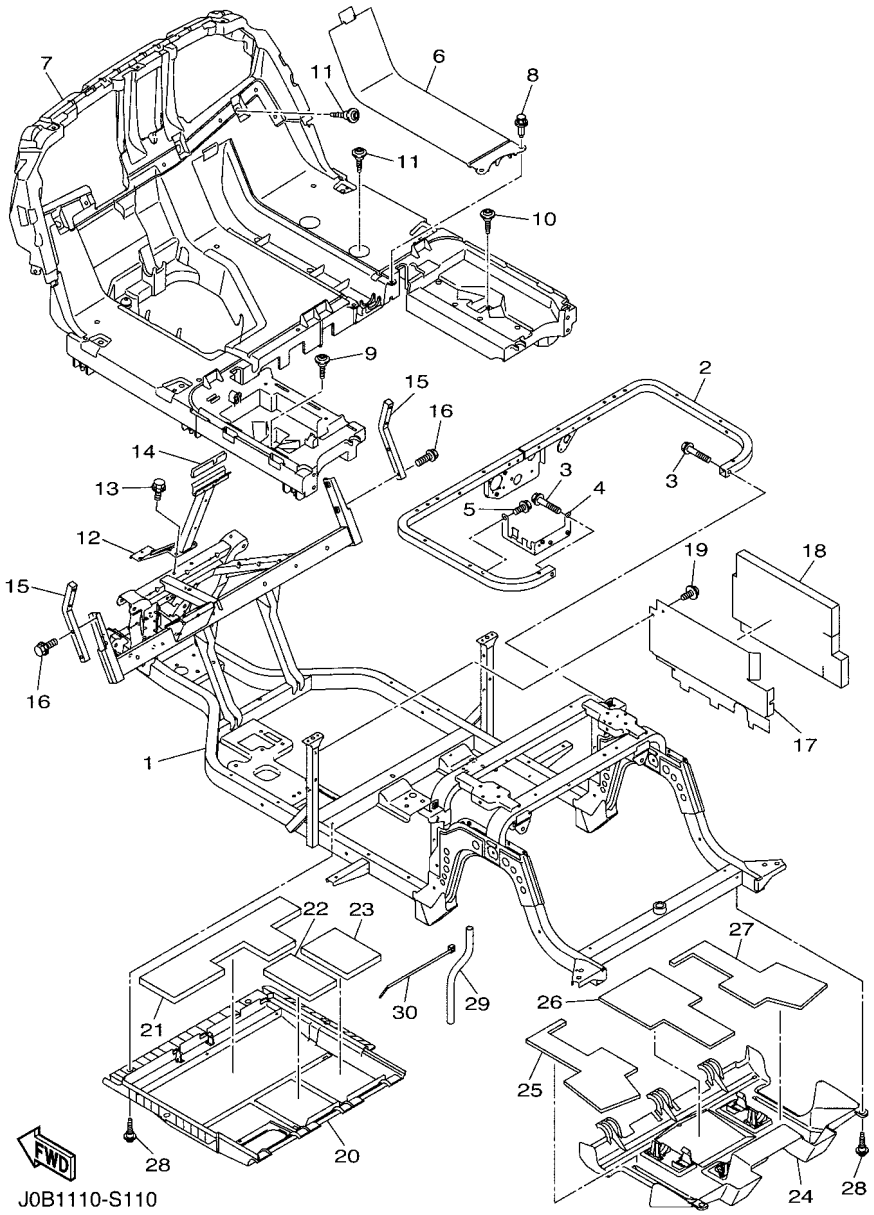

FIG. 12 FRAME

REF. NO.	PART NO.	DESCRIPTION	J0B1					REMARKS
28	J0B–F1738–00	BOLT	6					
29	J0B–F125J–00	PIPE, DRAIN	2					
30	90464–76800	CLAMP	2					

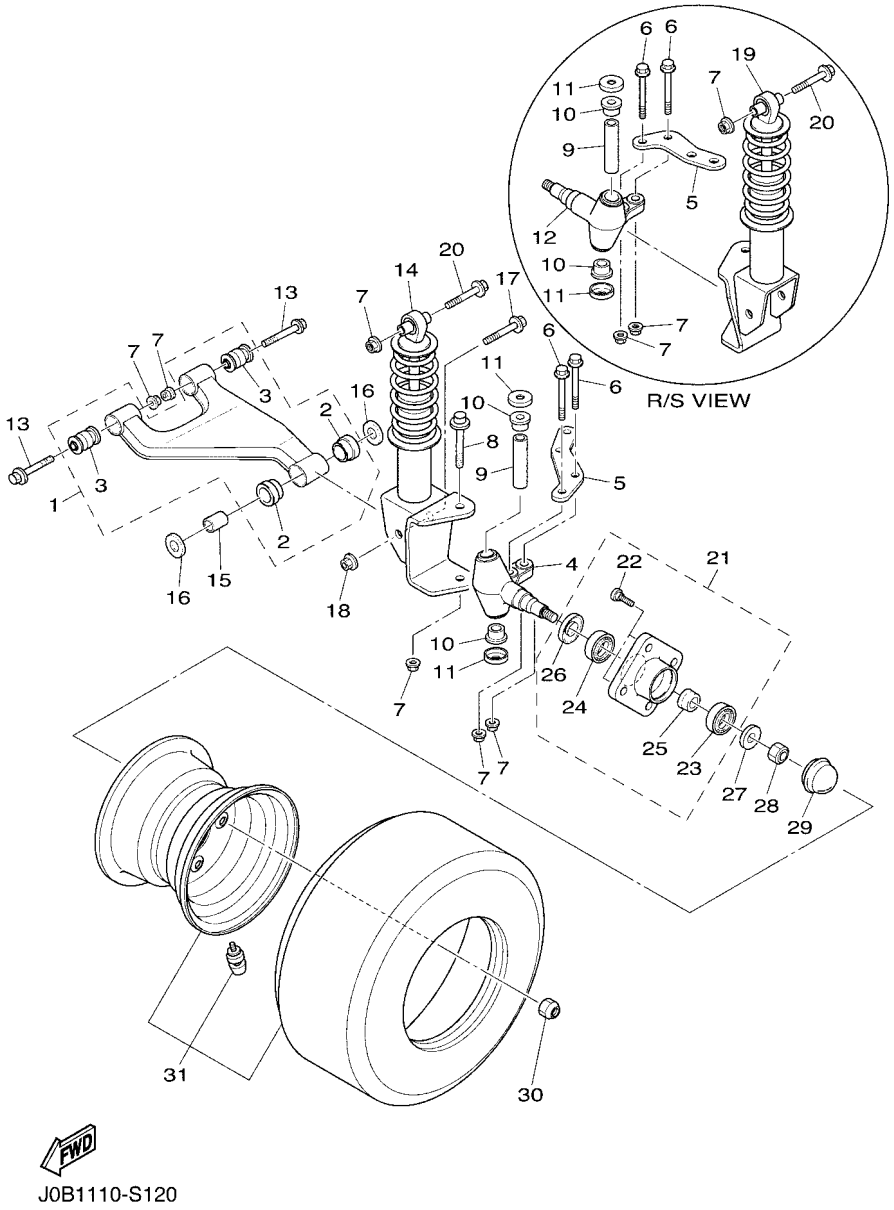

FIG. 13 FRONT SUSPENSION & WHEEL

REF. NO.	PART NO.	DESCRIPTION	J0B1					REMARKS
1	J0B–F3570–10	FRONT LOWER ARM COMP. (LEFT)	2					
2	90381–18801	.BUSH, SOLID	2					
3	2HR–23526–00	.BUSH	2					
4	JU0–F3511–20	KNUCKLE, STEERING 1	1					
5	JW1–F3512–00	ARM, KNUCKLE 1	2					
6	90105–10373	BOLT, FLANGE	4					
7	95602–10200	NUT, S/L FLANGE	12					
8	90105–10219	BOLT, FLANGE	2					
9	2NL–23448–00	SPACER	2					
10	90381–17800	BUSH, SOLID	4					
11	2NL–23517–00	COVER, THRUST 1	4					
12	JU0–F3521–20	KNUCKLE, STEERING 2	1					
13	90105–10267	BOLT, FLANGE	4					
14	J0B–F3350–00	SHOCK ABSORBER ASSY	1					
15	90387–12016	COLLAR	2					
16	401–22128–01	COVER, THRUST 1	4					
17	95812–12080	BOLT, FLANGE	2					
18	95612–12100	NUT, U	2					
19	J0B–F3390–00	SHOCK ABSORBER ASSY 2	1					
20	90105–10267	BOLT, FLANGE	2					
21	JW8–F5103–00	HUB BEARING UNIT ASSY	2					
22	90114–12806	.BOLT, SERRATION	4					
23	93306–204X0	.BEARING	1					
24	93306–005Y3	.BEARING	1					
25	90387–241M7	.COLLAR	1					
26	93102–30083	.OIL SEAL	1					
27	90208–14801	WASHER, CONICAL SPRING	2					

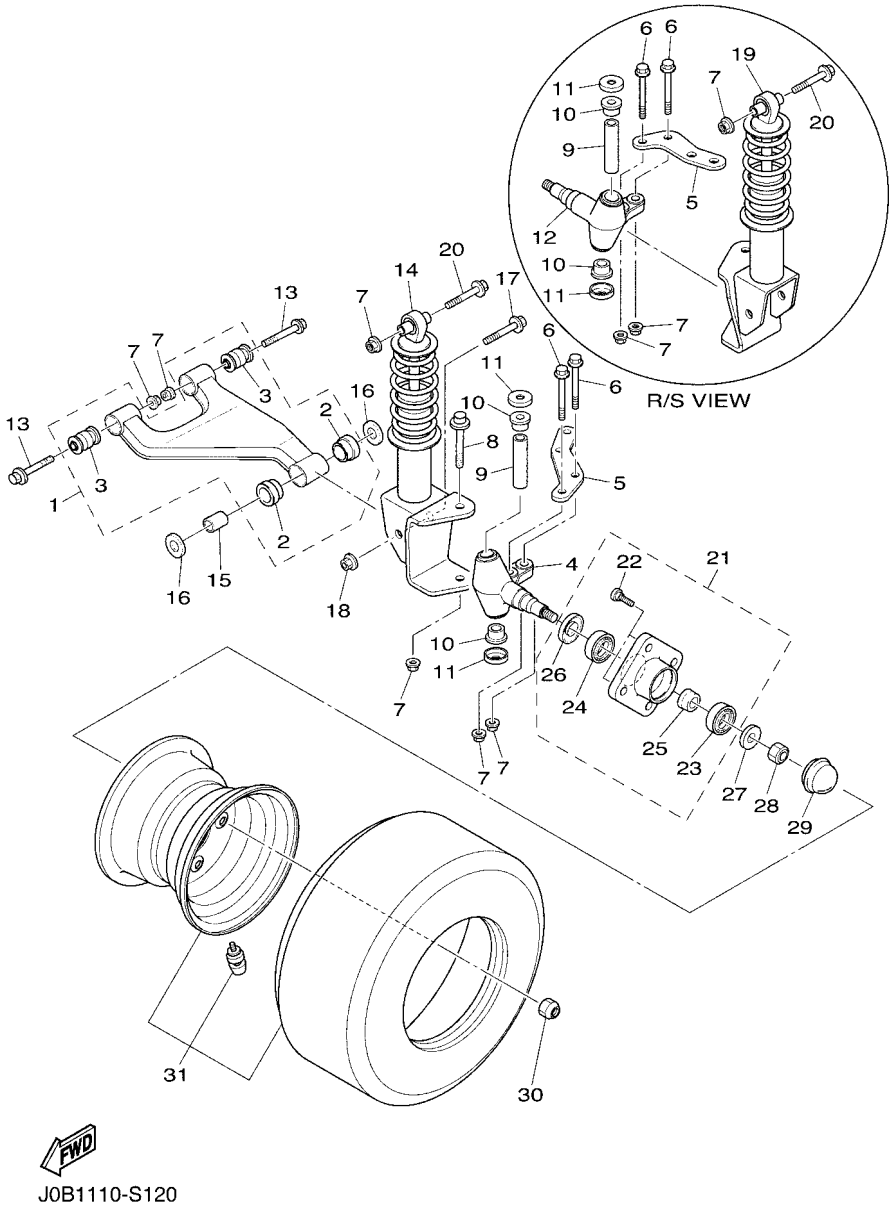

FIG. 13 FRONT SUSPENSION & WHEEL

REF. NO.	PART NO.	DESCRIPTION	J0B1					REMARKS
28	95602–14100	NUT, U	2					
29	JN6–F5118–01	COVER, HUB DUST	2					
30	90179–12262	NUT	8					
31	JW1–F5100–01	WHEEL ASSY (18X8.50-8-4PLY)	2					

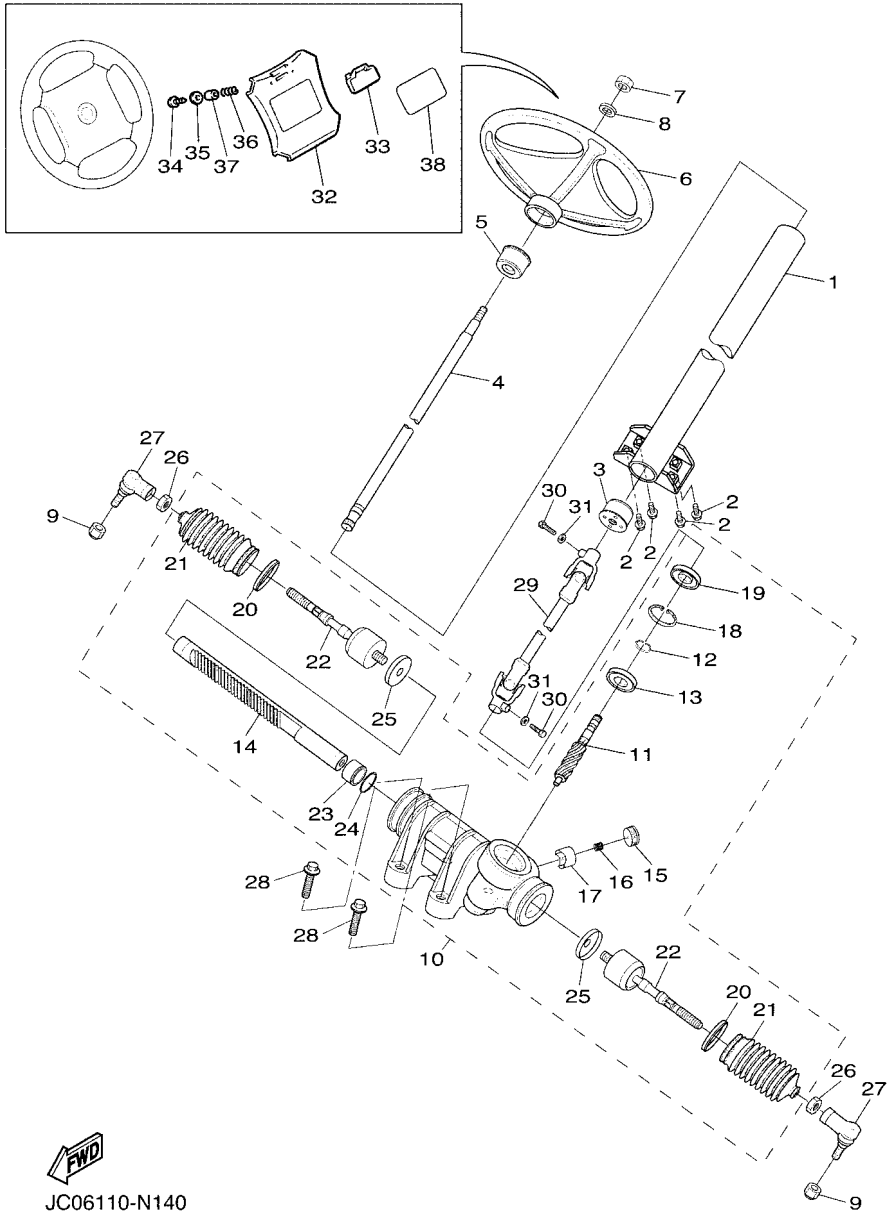

FIG. 14 STEERING

REF. NO.	PART NO.	DESCRIPTION	J0B1					REMARKS
1	JW1–F3811–03	COLUMN, STEERING	1					
2	95812–08020	BOLT, FLANGE	4					
3	JU0–F3857–11	HOLDER	1					
4	JU0–F3828–10	ROD, STEERING	1					
5	JU0–F3857–11	HOLDER	1					
6	JN3–F3838–00	WHEEL, STEERING	1					
7	90185–12008	NUT, SELF-LOCKING	1					
8	92902–12200	WASHER	1					
9	95602–12200	NUT, SELF-LOCKING	2					
10	JW1–F3400–00	STEERING ASSY	1					
11	JW1–F387A–00	.GEAR,PINION	1					
12	JW1–F3183–00	.CIRCLIP	1					
13	JW1–F3812–00	.BEARING, STEERING	1					
14	JW1–F387E–00	.GEAR, RACK	1					
15	5UG–F387G–00	.COVER, ADJUST	1					
16	5UG–F387K–00	.SPRING, PRESSURE	1					
17	5UG–F387F–00	.PAD, PRESSURE	1					
18	5UG–F387J–00	.RING, STOPPER	1					
19	5UG–F3844–00	.SEAL	1					
20	5UG–F3489–00	.BAND	2					
21	5UG–F3527–00	.SEAL, DUST 1	2					
22	JW1–F3837–00	.ROD, TIE 2	2					
23	JW1–F467K–00	.BUSH, CAP	1					
24	JW1–F3866–00	.CIRCLIP	1					
25	JW1–F3894–00	.WASHER, LOCK 1	2					
26	1P0–F3833–00	NUT 1	2					
27	JW8–23841–01	JOINT, UNIVERSAL 1	2					

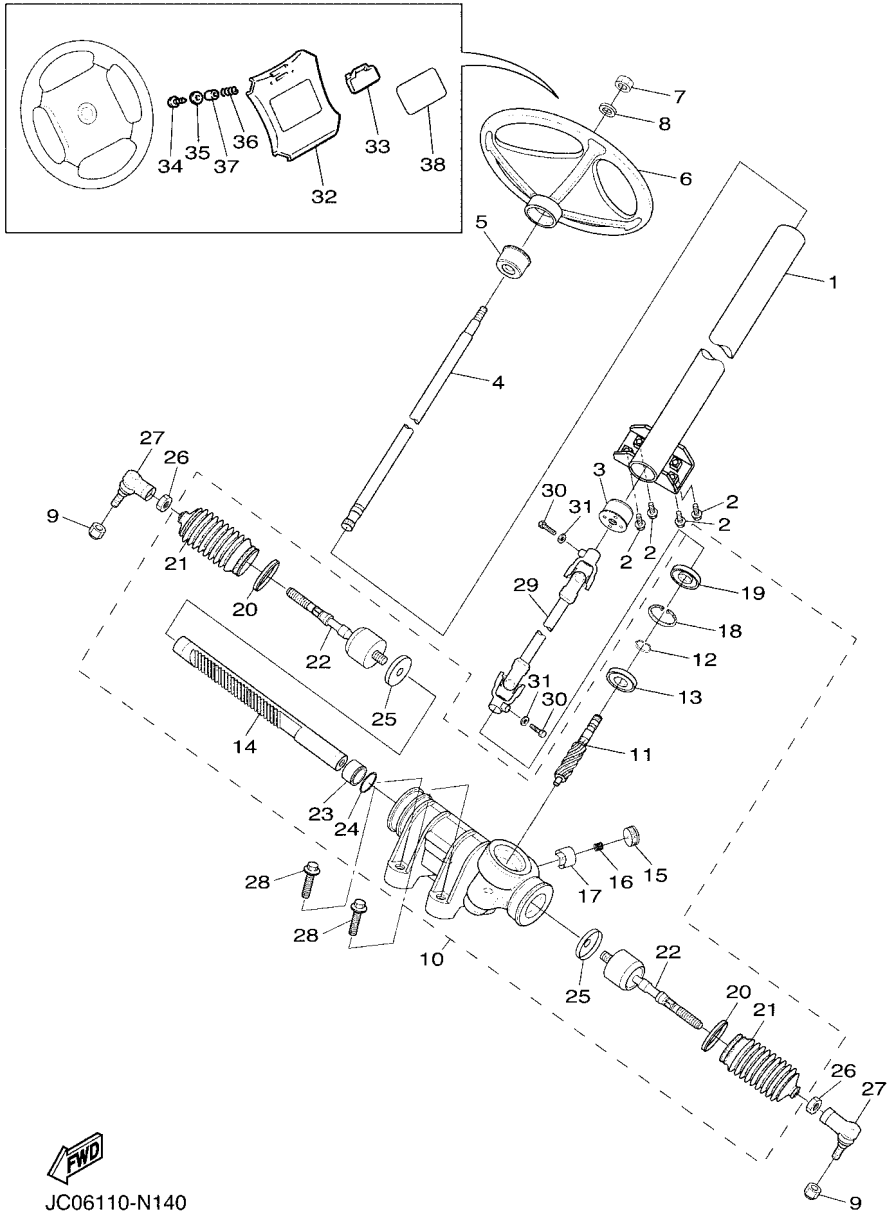

FIG. 14 STEERING

REF. NO.	PART NO.	DESCRIPTION	J0B1					REMARKS
28	90105–10847	BOLT, FLANGE	4					
29	JW1–F3822–01	JOINT 1	1					
30	97012–08030	BOLT	2					
31	92902–08600	WASHER, PLATE	2					
32	JW8–K8357–00	HOLDER 1	1					
33	JN6–K8358–01	HOLDER 2	1					
34	97702–40525	SCREW, TAPPING	2					
35	90201–04810	WASHER, PLATE	2					
36	90502–10013	SPRING, CONICAL	2					
37	90387–046N7	COLLAR	2					
38	JW8–K7762–00	LABEL, WARNING 2	1					UR FOR CAN
	JW8–K7762–11	LABEL, WARNING 2 (E, F)	1					UR EXCEPT FOR CAN
	JW8–K7762–21	LABEL, WARNING 2 (G, S)	1					UR EXCEPT FOR CAN

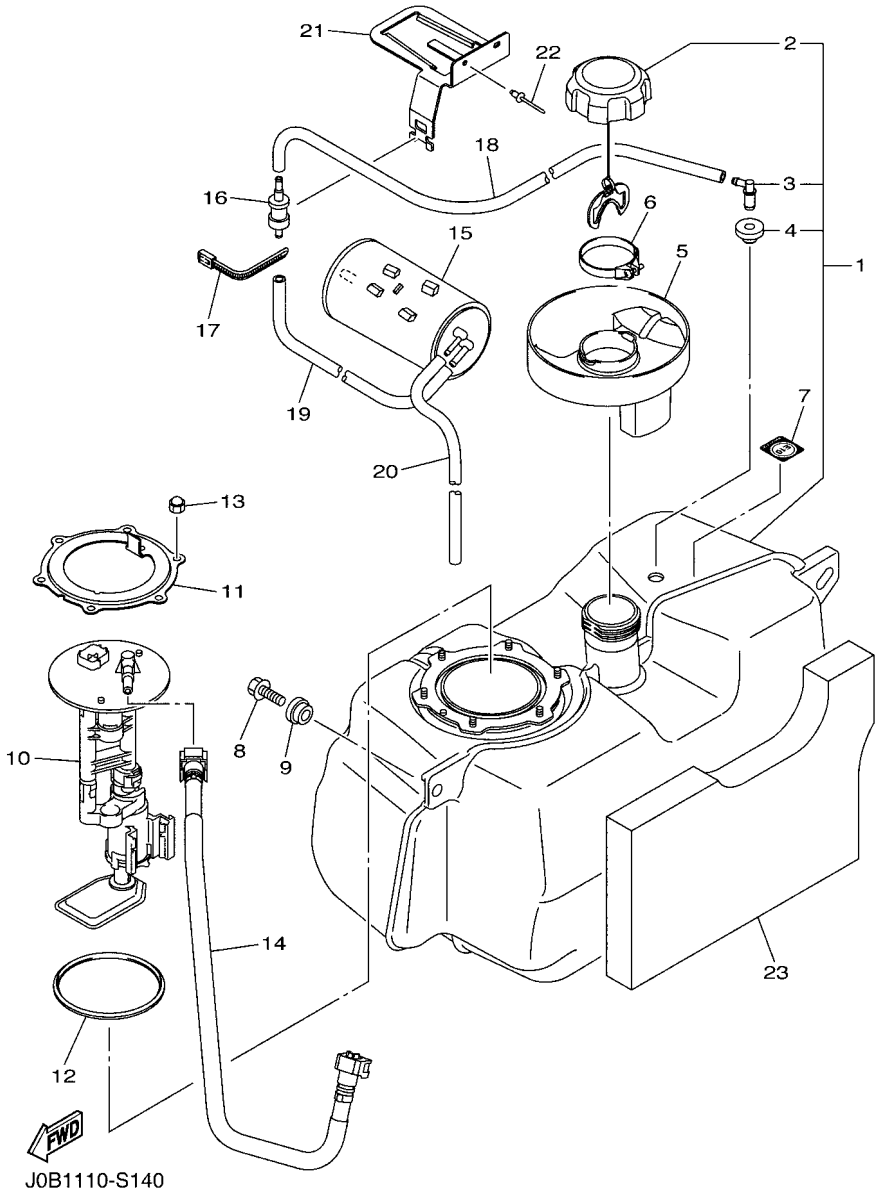

FIG. 15 FUEL TANK

REF. NO.	PART NO.	DESCRIPTION	J0B1					REMARKS
1	JC0–F4111–01	TANK, FUEL	1					
2	JW1–F4610–00	.CAP ASSY	1					
3	JW1–F4112–00	.PIPE	1					
4	JU5–F4375–00	.GROMMET	1					
5	J0B–F4217–00	COVER	1					
6	90450–54008	HOSE CLAMP ASSY	1					
7	B88–2817K–00	LABEL,FUEL	1					
8	JW1–F1738–00	BOLT	2					
9	90560–08251	SPACER	2					
10	J0B–13907–00	FUEL PUMP COMP.	1					
11	18P–24491–00	BRACKET, FUEL PUMP	1					
12	1S3–24486–00	O-RING	1					
13	95302–06800	NUT, CROWN	6					
14	J0B–13971–00	PIPE, FUEL 1	1					
15	7CC–F4170–01	CANISTER ASSY	1					
16	4WM–24180–00	ROLL OVER VALVE ASSY	1					
17	90464–40825	CLAMP	1					
18	J0B–F4314–00	PIPE 4	1					
19	J0B–F4316–00	PIPE 6	1					
20	J0B–F4317–00	PIPE 7	1					
21	J0B–F419A–00	HOLDER	1					
22	JW7–K7329–00	RIVET	2					
23	J0B–K8253–00	PAD, SILENCER 3	1					

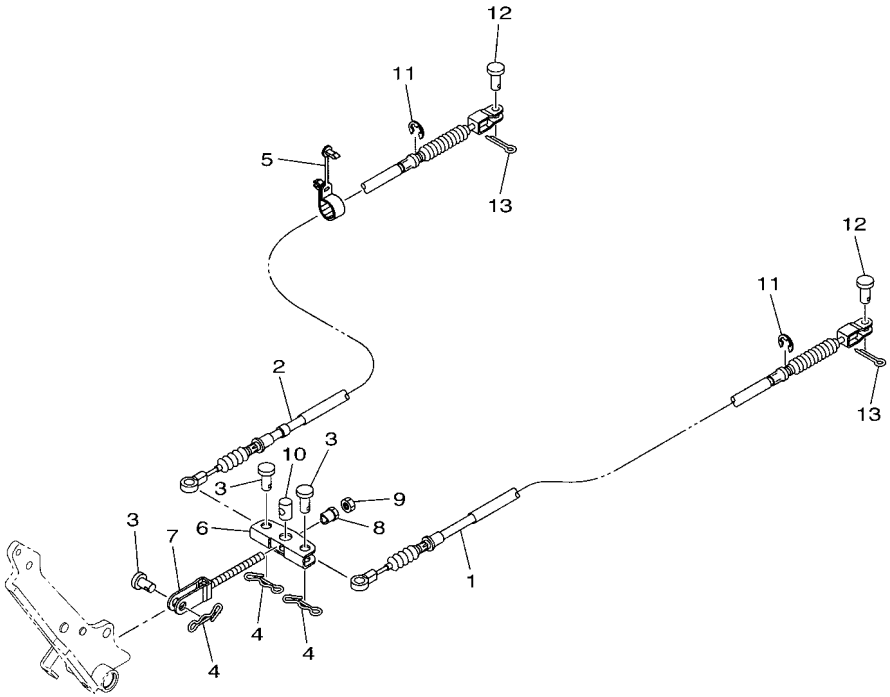

J0B1110-S150

FIG. 16 PEDAL WIRE

REF. NO.	PART NO.	DESCRIPTION	J0B1					REMARKS
1	J0B–F6341–00	WIRE, BRAKE 1	1					
2	J0B–F6351–00	CABLE, BRAKE	1					
3	91702–10026	PIN, CLEVIS	3					
4	90468–20196	CLIP	3					
5	JW7–F312H–00	CLAMP	4					
6	JW8–F5681–10	EQUALIZER, BRAKE	1					
7	JN6–F5685–01	ROD	1					
8	90179–08822	NUT	1					
9	95307–08700	NUT	1					
10	90249–14129	PIN	1					
11	99001–09600	CIRCLIP	2					
12	91702–08018	PIN, CLEVIS	2					
13	91490–25015	PIN. COTTER	2					

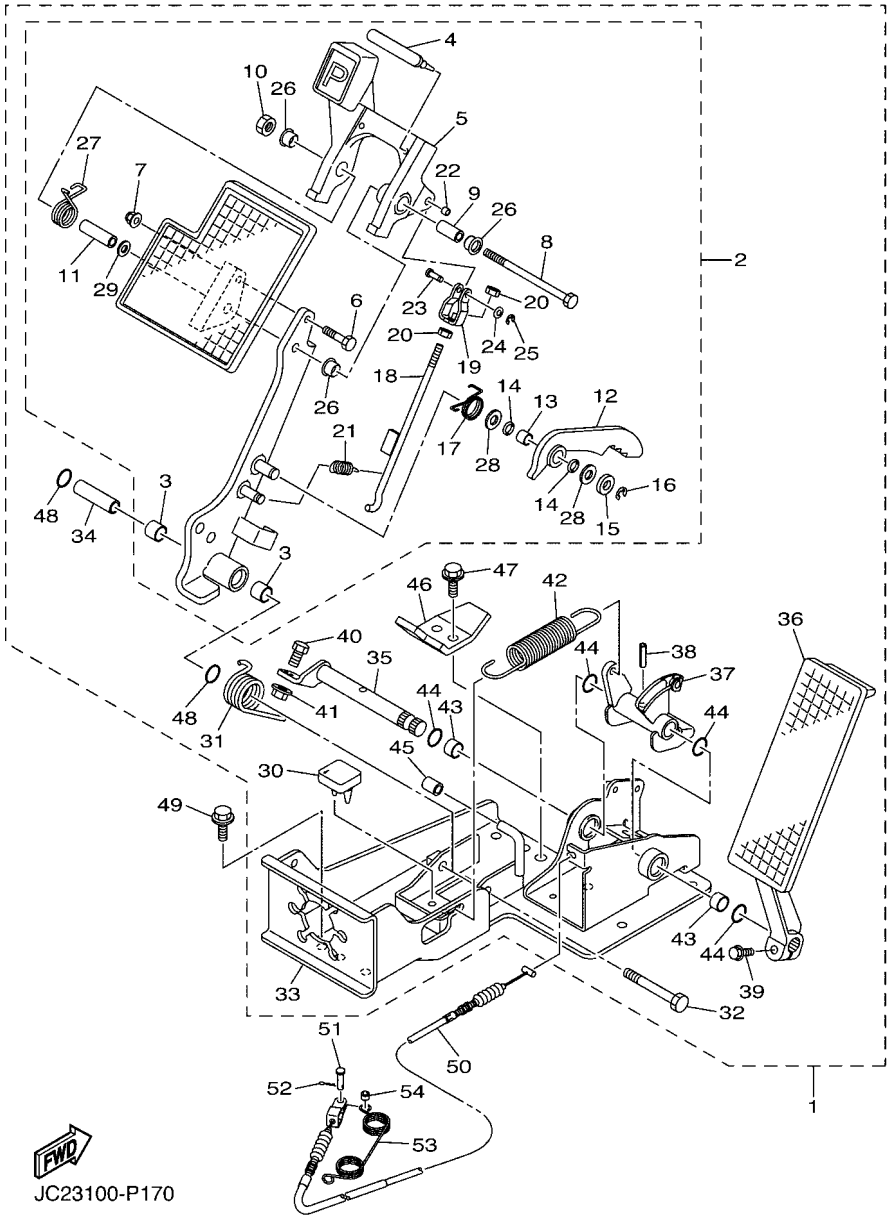

FIG. 17 PEDAL ASSEMBLY

REF. NO.	PART NO.	DESCRIPTION	J0B1					REMARKS
1	JW8–F7850–31	PEDAL ASSY (L.H)	1					
2	JW9–F7200–21	.PEDAL, BRAKE	1					
3	JW8–F7814–21	..BUSH, PEDAL	2					
4	JW9–F5672–00	..PAD, PARKING PEDAL	1					
5	JW9–F5671–00	..PEDAL, PARKING BRAKE	1					
6	JW8–F7117–00	..BOLT, MAIN STAND	1					
7	JW8–F8363–00	..NUT	1					
8	JW8–F7416–00	..BOLT, FOOTREST	1					
9	JW8–F639N–00	..COLLAR	1					
10	JW8–F7218–00	..NUT	1					
11	JW8–F7113–00	..COLLAR, MAIN STAND	1					
12	JW9–F5666–00	..SECTOR, PARKING BRAKE	1					
13	JW8–F7121–00	..BUSH	1					
14	JW9–F7221–00	..SEAL, SHAFT	2					
15	JW8–F7322–00	..WASHER	1					
16	JW8–F3183–00	..CIRCLIP	1					
17	JW8–F7426–01	..SPRING, RETURN	1					
18	JW9–F7231–10	..ROD, BRAKE	1					
19	JW9–F7232–00	..END, ROD 2	1					
20	JW8–F7318–00	..NUT	2					
21	JW8–F6314–00	..SPRING	1					
22	JW8–F639L–00	..BUSH 1	1					
23	JW9–F7228–00	..PIN, JOINT	1					
24	JW8–F8323–00	..WASHER, LEG SHIELD	1					
25	JW8–F5415–00	..CIRCLIP	1					
26	90386–12800	..BUSH	3					
27	JW8–F7825–01	..SPRING, RETURN	1					

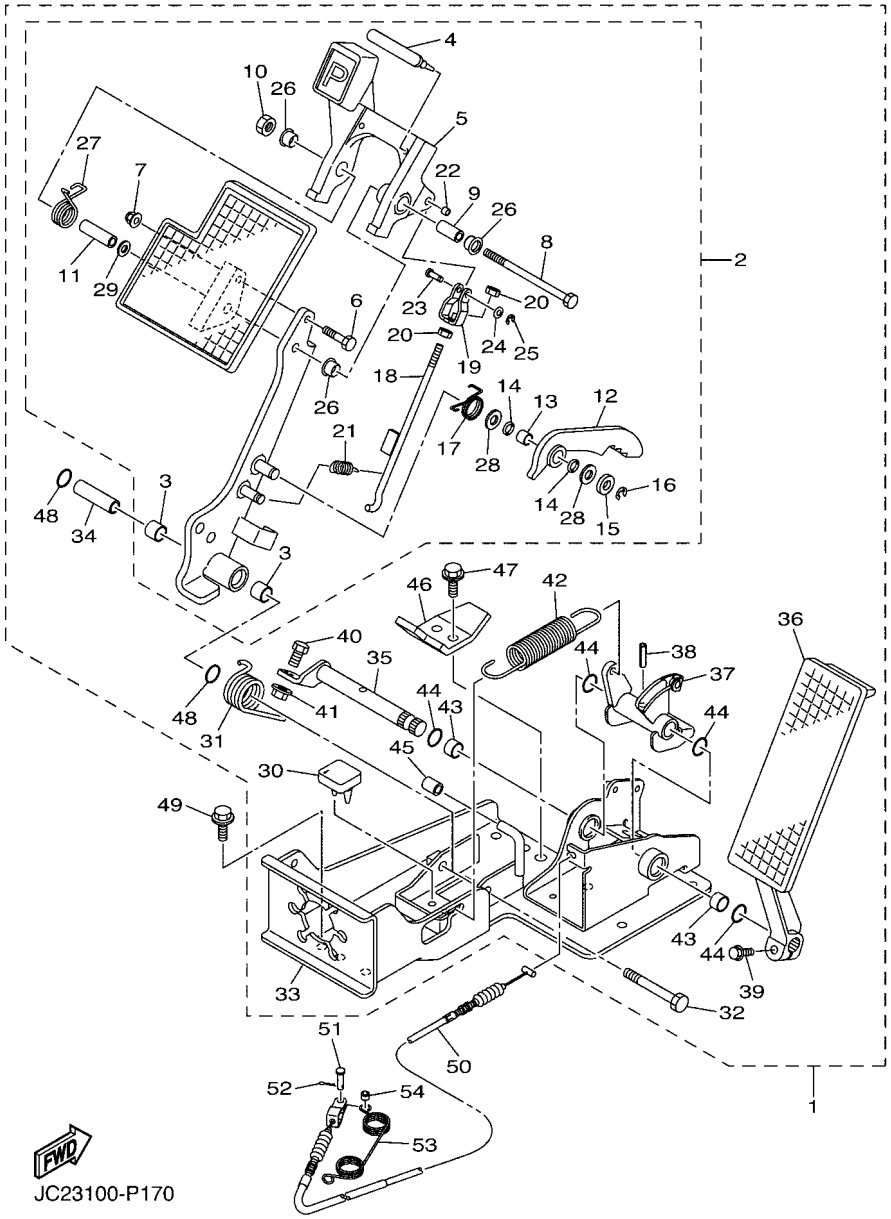

FIG. 17 PEDAL ASSEMBLY

REF. NO.	PART NO.	DESCRIPTION	J0B1					REMARKS
28	JW8–F7119–00	..WASHER	2					
29	JW8–F8319–00	..WASHER	1					
30	JW9–F7245–10	.PAD, BRAKE PEDAL	1					
31	JW8–F7316–01	.SPRING, SIDE STAND	1					
32	JW8–F7217–00	.BOLT	1					
33	JW8–F7445–31	.PLATE 1	1					
34	JW8–F7213–20	.COLLAR	1					
35	JW8–F7853–10	.SHAFT, PEDAL 1	1					
36	JW9–F7871–10	.PEDAL, ACCELERATOR	1					
37	JW8–F7872–30	.ARM, ACCELERATOR PEDAL	1					
38	JW8–F7438–00	.PIN, CLEVIS	1					
39	JW8–F7434–00	.BOLT	1					
40	JW8–F7317–00	.BOLT	1					
41	JW8–F7118–00	.NUT	1					
42	JW8–F815H–01	.SPRING	1					
43	JW8–F7814–21	.BUSH, PEDAL	2					
44	JW8–F4486–00	.O-RING	4					
45	JW9–F5673–00	.DAMPER, BRAKE	1					
46	JW9–F7246–20	.NAIL, BRAKE	1					
47	JW8–F8331–00	.BOLT, LEG SHIELD	2					
48	JW8–F4486–00	.O-RING	2					
49	95812–08020	BOLT, FLANGE	6					
50	J0B–F6311–00	CABLE, THROTTLE 1	1					
51	91702–05014	PIN, CLEVIS	1					
52	90468–10049	CLIP	1					
53	90508–16460	SPRING, TORSION	1					
54	90560–05001	SPACER	1					

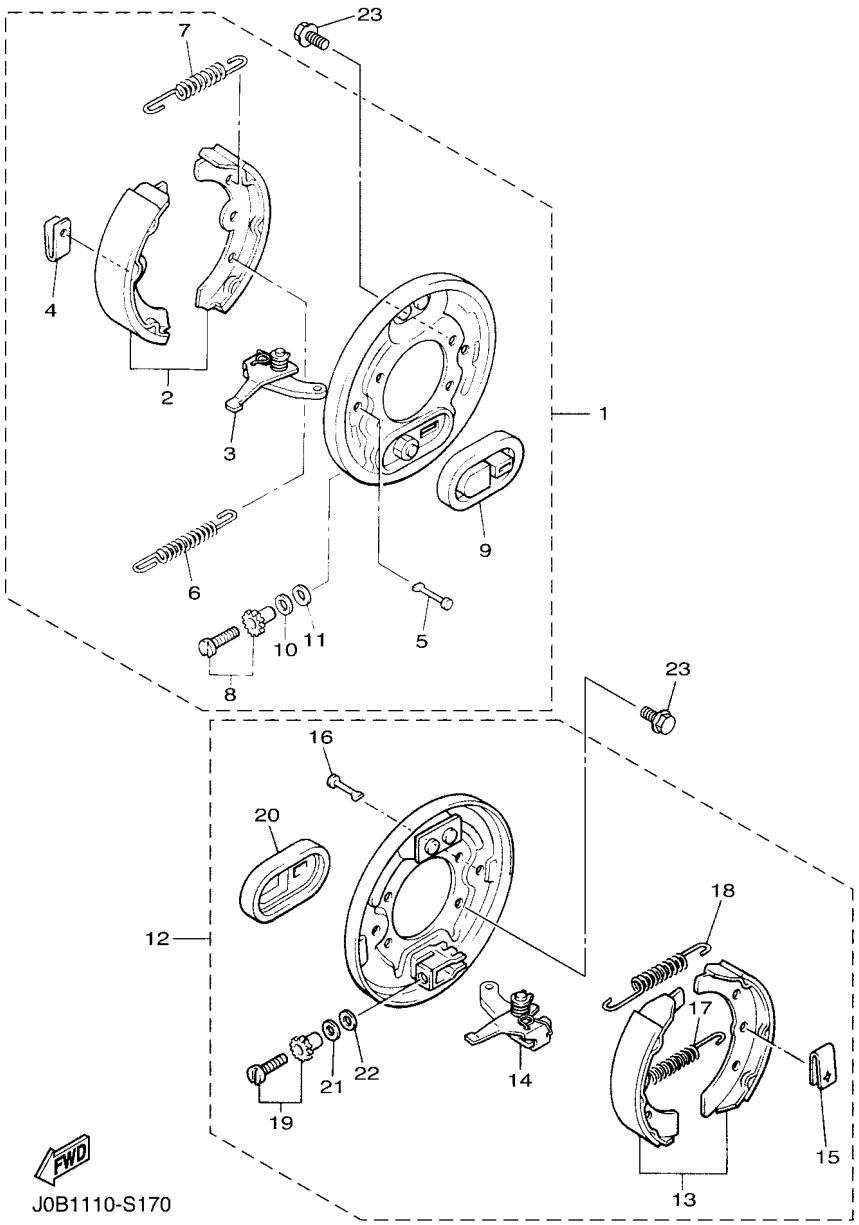

FIG. 18 BRAKE

REF. NO.	PART NO.	DESCRIPTION	J0B1					REMARKS
1	JW8–F7280–00	BACKING PLATE ASSY 1	1					
2	JN9–W2536–00	..BRAKE SHOE SET	1					
3	J38–27204–00	..LEVER ASSY 1	1					
4	JW8–F7281–00	..SPRING, SHOE CLAMP	2					
5	J10–27282–00	..PIN, SHOE HOLD DOWN	2					
6	90506–20281	..SPRING, TENSION	1					
7	90506–14001	..SPRING, TENSION	1					
8	J55–27270–00	..ADJUSTER ASSY	1					
9	JW8–F7286–00	..COVER, DUST	1					
10	90201–121H9	..WASHER, PLATE	1					
11	90201–121H8	..WASHER, PLATE	1					
12	JW8–F7290–00	BACKING PLATE ASSY 2	1					
13	JN9–W2536–00	..BRAKE SHOE SET	1					
14	J38–27205–00	..LEVER ASSY 2	1					
15	JW8–F7281–00	..SPRING, SHOE CLAMP	2					
16	J10–27282–00	..PIN, SHOE HOLD DOWN	2					
17	90506–20281	..SPRING, TENSION	1					
18	90506–14001	..SPRING, TENSION	1					
19	J55–27260–00	..ADJUSTER ASSY	1					
20	JW8–F7286–00	..COVER, DUST	1					
21	90201–121H9	..WASHER, PLATE	1					
22	90201–121H8	..WASHER, PLATE	1					
23	90105–082A0	BOLT, FLANGE	8					

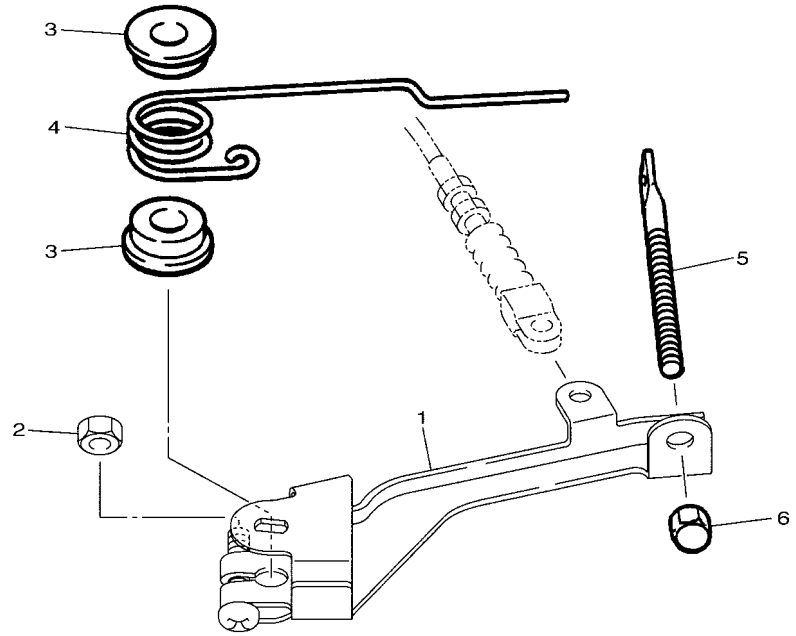

J0B1110-S180

FIG. 19 GOVERNOR

REF. NO.	PART NO.	DESCRIPTION	J0B1					REMARKS
1	J0B–27951–00	LEVER, SPEED LIMITER	1					
2	95302–06600	NUT, HEXAGON	1					
3	90386–08141	BUSH	2					
4	90508–40678	SPRING, TORSION	1					
5	J38–27959–00	SCREW, ADJUSTING	1					
6	95602–06200	NUT, SELF-LOCKING	1					

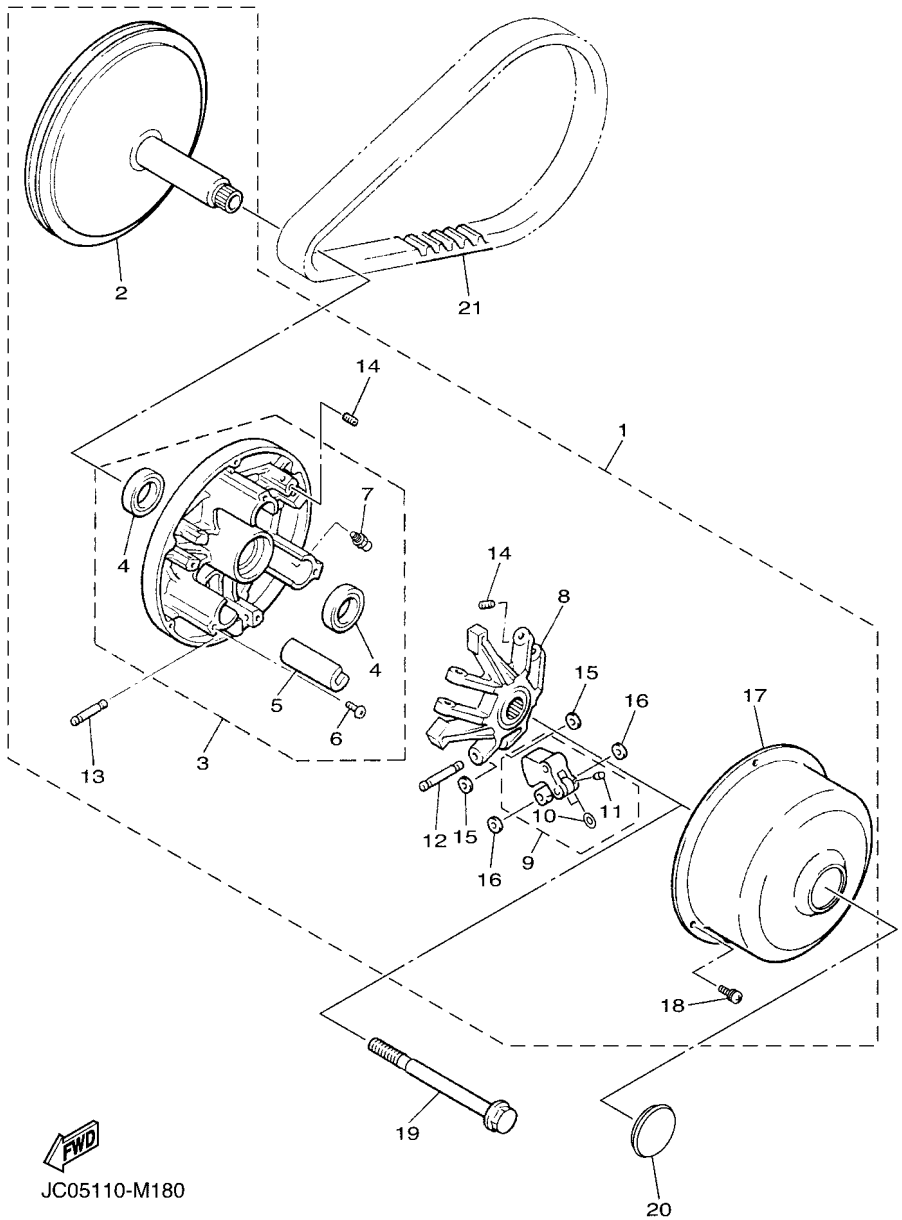

FIG. 20 PRIMARY SHEAVE

REF. NO.	PART NO.	DESCRIPTION	J0B1					REMARKS
1	J0B–G6201–00	PRIMARY CLUTCH ASSY	1					
2	JW8–G6210–00	.PRIMARY FIXED SHEAVE COMP.	1					
3	J0B–G6220–00	.PRIMARY SLIDING SHEAVE COMP.	1					
4	JW8–G624A–00	..OIL SEAL 1	2					
5	JW8–G6253–00	..SLIDER	3					
6	JW8–G4189–00	..SCREW	3					
7	JW8–F135J–00	..NIPPLE	1					
8	JW8–G6251–21	.SPIDER	1					
9	JW8–G6205–21	.WEIGHT LINK ASSY	3					
10	JW8–G5618–00	..WASHER, 1	2					
11	90113–04803	..BOLT, SET	1					
12	JW8–G6236–20	.PIN, WEIGHT	3					
13	JW8–G6237–20	.PIN, WEIGHT 2	3					
14	90113–04803	.BOLT, SET	6					
15	JW8–G5618–00	.WASHER, 1	6					
16	JW8–G5621–00	.WASHER, 2	6					
17	J0B–G6231–00	.CAP	1					
18	JW8–G5282–00	.SCREW	3					
19	JW8–G6249–00	BOLT	1					
20	JW8–G7339–00	PLUG	1					
21	J0B–G6241–00	BELT	1					

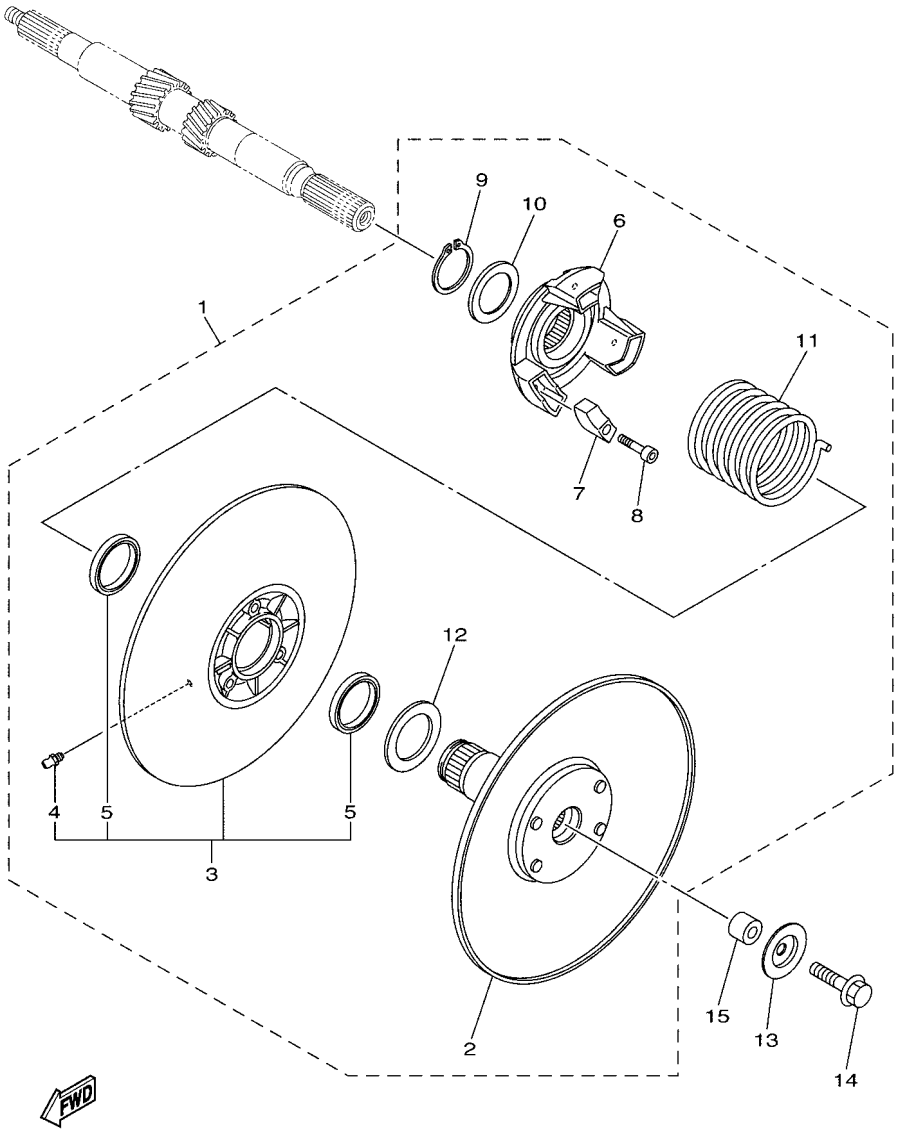

JC05110-M190

FIG. 21 SECONDARY SHEAVE

REF. NO.	PART NO.	DESCRIPTION	J0B1					REMARKS
1	JW8–G6202–22	SECONDARY SHEAVE ASSY	1					
2	JW8–G6260–22	.SECONDARY FIXED SHEAVE COMP.	1					
3	JW8–G6270–21	.SECONDARY SLIDING SHEAVE COMP.	1					
4	JW8–F135J–00	..NIPPLE	1					
5	JW8–G624B–00	..OIL SEAL 2	2					
6	JW8–G6284–00	.SEAT, SECONDARY SPRING	1					
7	JW8–E7688–00	.SHOE, RAMP	3					
8	JW8–G6159–00	.BOLT 3	3					
9	JW8–G5531–00	.CLIP, DRIVE SHAFT	1					
10	JW8–G6374–00	.COLLAR, SPRING	1					
11	JW8–G6275–10	.SPRING, CLUTCH 1	1					
12	JW8–G5677–00	.WASHER	1					
13	90209–08018	WASHER	1					
14	90105–08260	BOLT, FLANGE	1					
15	JW8–G5697–20	COLLAR	1					

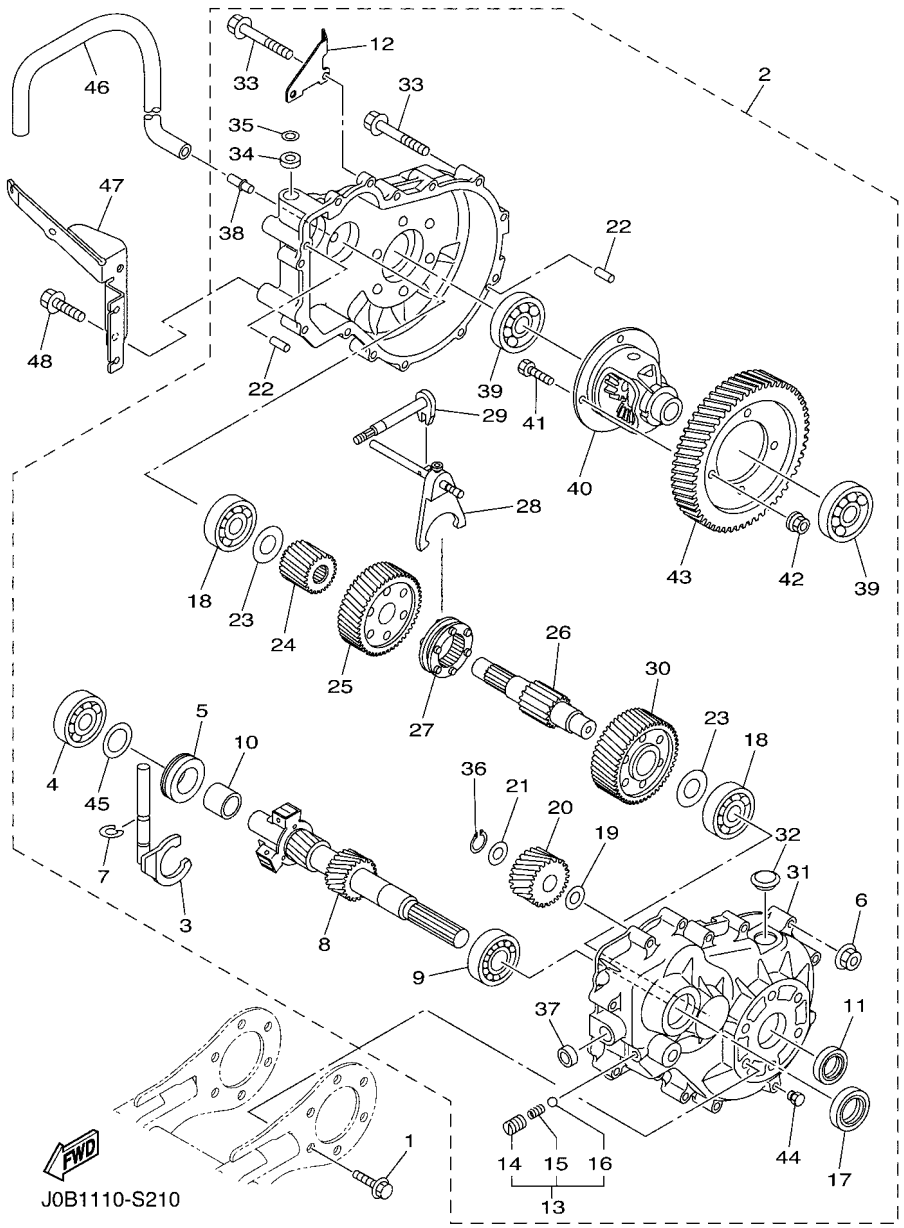

FIG. 22 TRANSMISSION

REF. NO.	PART NO.	DESCRIPTION	J0B1					REMARKS
1	95812–10020	BOLT, FLANGE	6					
2	J0B–G6301–00	TRANSMISSION ASSY	1					
3	J0B–G633E–00	.BAR 1	1					
4	93306–303Y6	.BEARING	1					
5	JW8–E1923–00	.SLEEVE, GOVERNOR	1					
6	J0B–G2391–00	.NUT 1	13					
7	JU0–F722H–00	.RETAINER	1					
8	J0B–G6320–00	.INPUT SHAFT ASSY	1					
9	J0B–G6164–00	.BEARING 1	1					
10	J0B–G3127–00	.COLLAR	1					
11	J0B–G3812–00	.SEAL, DUST	2					
12	J0B–G6555–00	.BRACKET 2	1					
13	JU0–G6376–00	.SPRING SET	1					
14	90113–08803	..BOLT, SET	1					
15	90501–10852	..SPRING, COMPRESSION	1					
16	93500–06826	..BALL	1					
17	93102–25868	.OIL SEAL	1					
18	J0B–G580H–00	.BEARING ASSY	2					
19	90201–208H9	.WASHER, PLATE	1					
20	J0B–G6356–00	.GEAR, IDLER	1					
21	90201–208J0	.WASHER, PLATE	1					
22	93606–10842	.PIN, DOWEL	2					
23	J0B–G1297–00	.WASHER, 1	2					
24	J0B–G6316–00	.GEAR, PINION 1	1					
25	J0B–G6326–00	.GEAR, WHEEL 1	1					
26	J0B–G633G–00	.SHAFT	1					
27	J0B–G6153–00	.COLLAR, GUIDE	1					

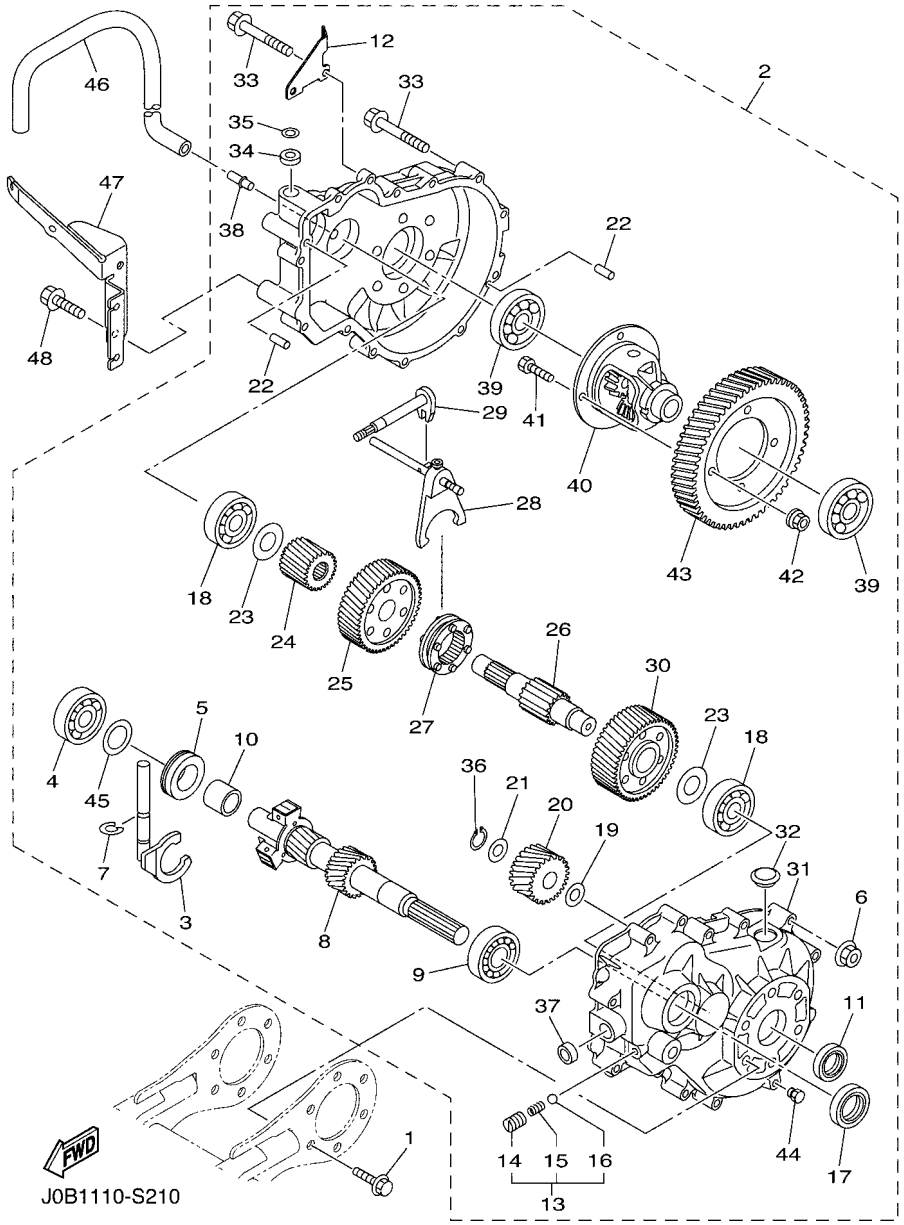

FIG. 22 TRANSMISSION

REF. NO.	PART NO.	DESCRIPTION	J0B1					REMARKS
28	J0B–G638E–00	.BAR, SHIFT 2	1					
29	J0B–G638A–00	.BAR, SHIFT 1	1					
30	J0B–G6327–00	.GEAR, WHEEL 2	1					
31	J0B–G6314–00	.COVER, TRANSMISSION	1					
32	JN3–G6432–00	.STOPPER	1					
33	J0B–G1148–00	.BOLT	13					
34	93109–10820	.OIL SEAL	1					
35	JU0–F723F–00	.WASHER, SPECIAL	1					
36	JW8–F47E3–00	.CIRCLIP	1					
37	93104–11829	.OIL SEAL	1					
38	JW8–G5378–00	.NIPPLE, HOSE	1					
39	93306–007Y0	.BEARING	2					
40	J0B–G6410–00	.DIFFERENTIAL ASSY.	1					
41	JC1–G2544–00	.BOLT	4					
42	90170–10840	.NUT	4					
43	J0B–G6355–00	.GEAR, PRIMARY	1					
44	J0B–G5148–00	.PLUG, DRAIN	1					
45	JN3–G6344–00	.SHIM, 0.76MM (0.030IN)	1					
46	JW8–G2541–00	PIPE 1	1					
47	J0B–G6556–00	BRACKET 3	1					
48	90105–08867	BOLT, FLANGE	2					

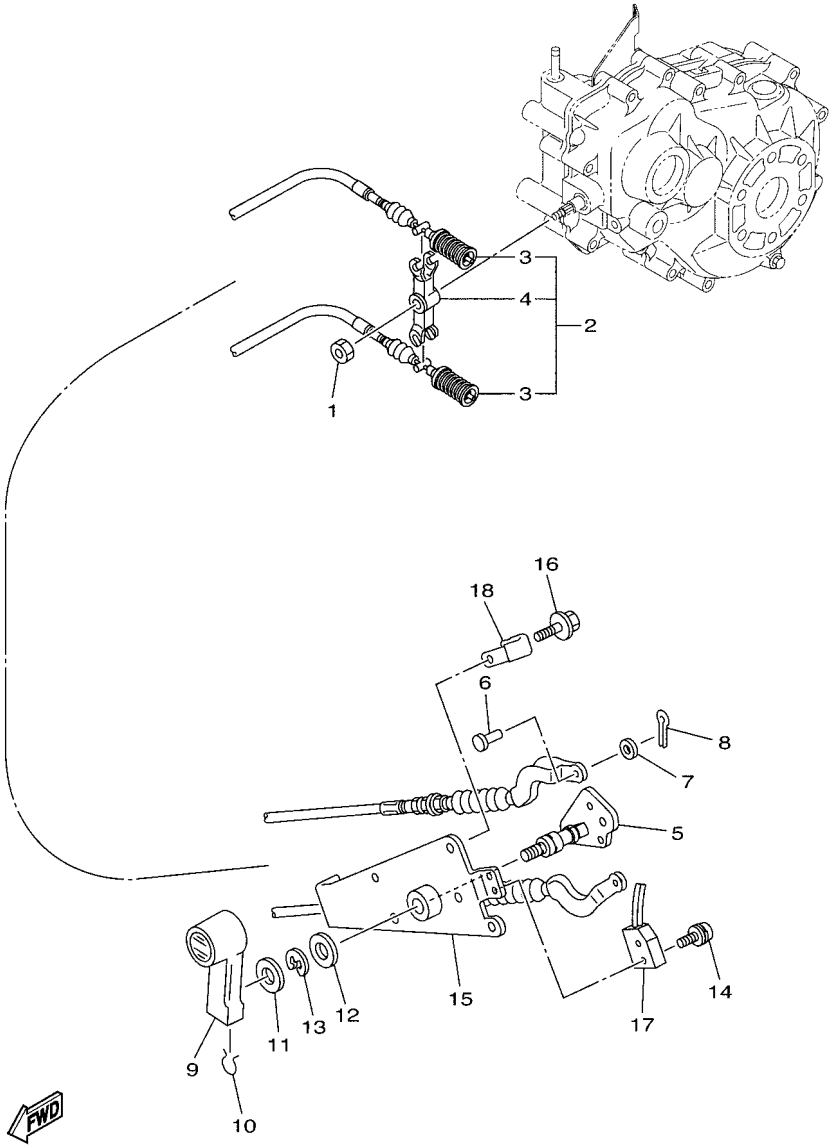

J0B1110-S220

FIG. 23 SHIFTER & CABLES

REF. NO.	PART NO.	DESCRIPTION	J0B1					REMARKS
1	95602–08100	NUT, U	1					
2	J0B–G8330–00	CABLE END ASSY	1					
3	J0B–G6371–00	.WIRE, SHIFT	2					
4	JW8–G6383–10	.LEVER, SHIFT 2	1					
5	J0B–G6382–00	LEVER, SHIFT 1	1					
6	91702–06014	PIN, CLEVIS	2					
7	92902–06600	WASHER, PLATE	2					
8	91402–20012	PIN, COTTER	2					
9	JN3–G6381–00	KNOB, SHIFT	1					
10	JN3–G6376–00	SPRING SET	1					
11	90201–208S8	WASHER, PLATE	1					
12	90201–198S7	WASHER, PLATE	1					
13	99009–19400	CIRCLIP	1					
14	97602–04316	SCREW, PAN HEAD WITH WASHER	2					
15	J0B–G6372–00	BRACKET, SHIFT WIRE	1					
16	90105–06831	BOLT, FLANGE	3					
17	JN3–82617–01	SWITCH	1					
18	90465–06038	CLAMP	1					

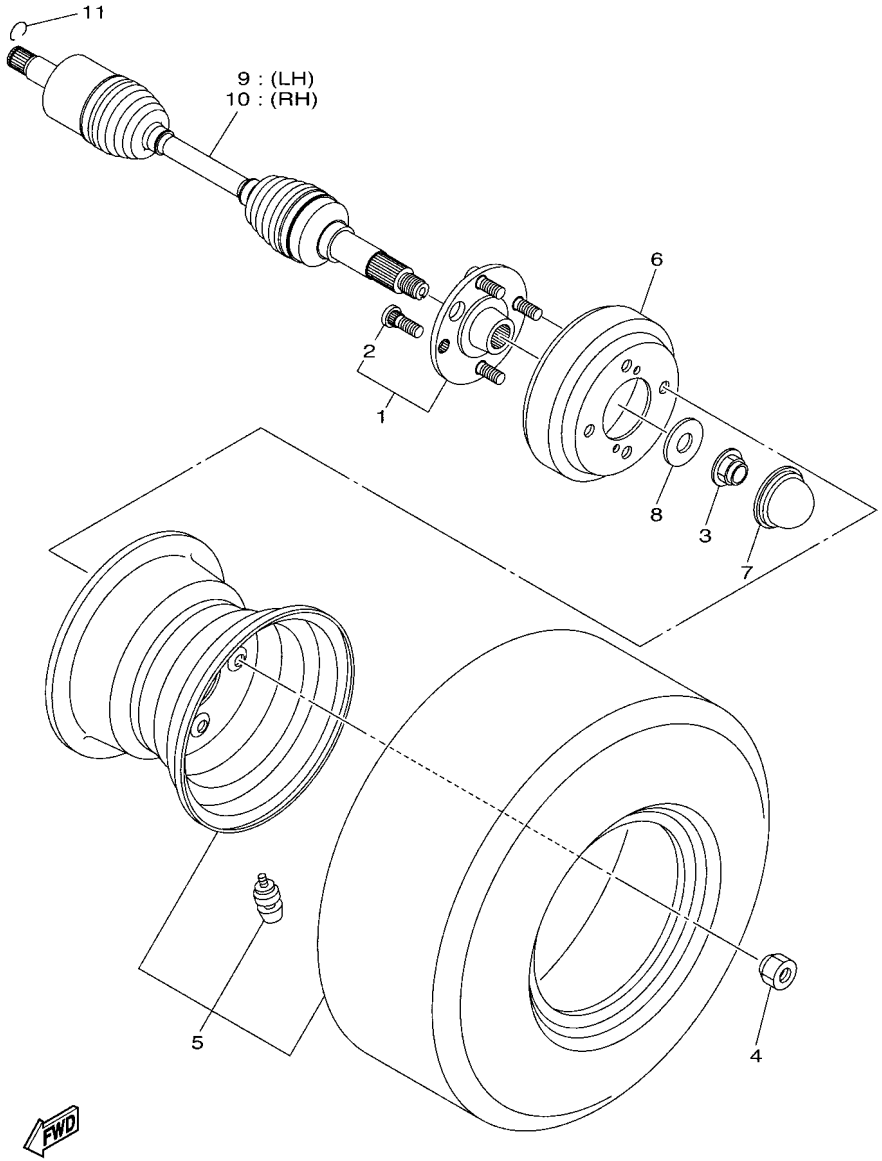

J0B1110-S230

FIG. 24 REAR AXLE & WHEEL

REF. NO.	PART NO.	DESCRIPTION	J0B1					REMARKS
1	J0B–F5310–01	HUB ASSY	2					
2	90114–12004	.BOLT, SERRATION	4					
3	90179–20016	NUT	2					
4	90179–12262	NUT	8					
5	JW1–F5100–01	WHEEL ASSY (18X8.50-8-4PLY)	2					
6	JW8–G6521–00	DRUM	2					
7	JW8–F5118–00	COVER, HUB DUST	2					
8	90201–20035	WASHER, PLATE	2					
9	J0B–F518F–00	DRIVE SHAFT ASSY	1					
10	J0B–F518G–00	DRIVE SHAFT ASSY	1					
11	93450–22119	CIRCLIP	2					

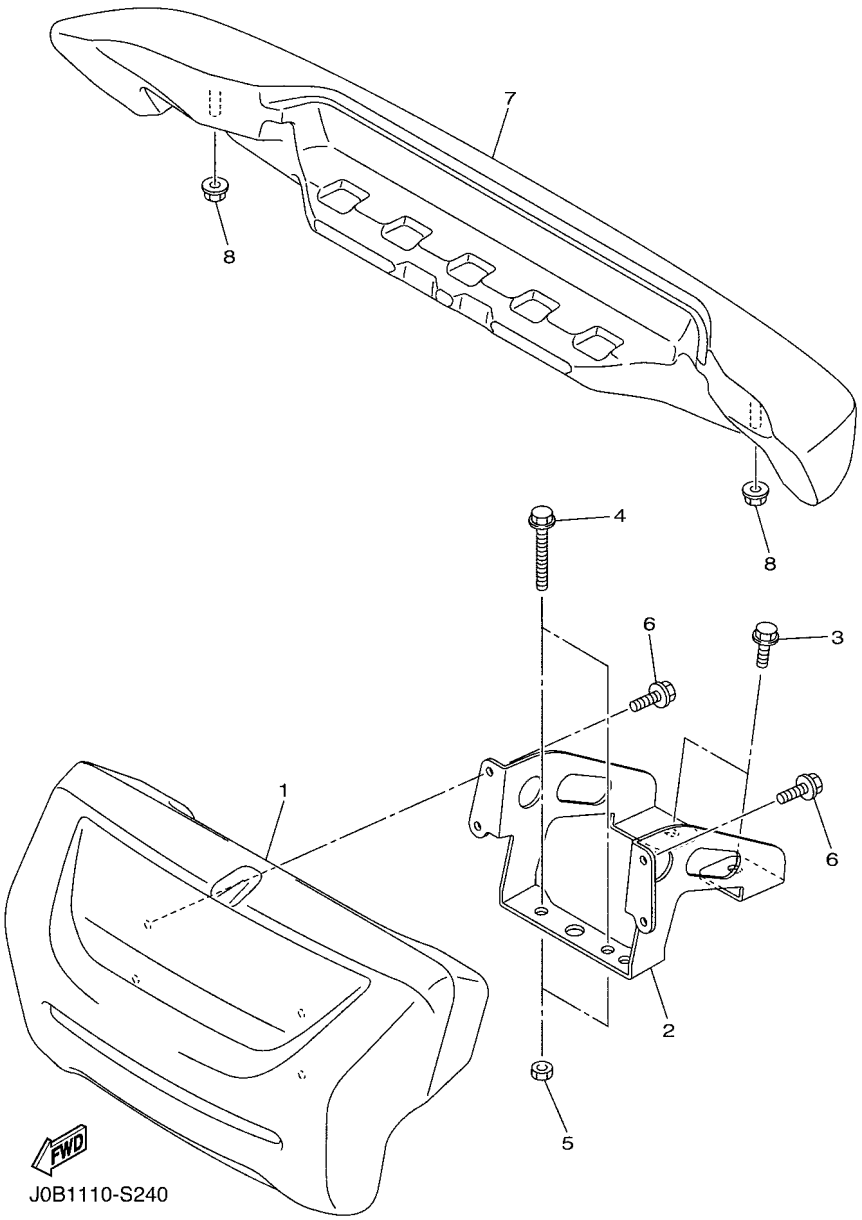

FIG. 25 BUMPER

REF. NO.	PART NO.	DESCRIPTION	J0B1					REMARKS
1	J0B–K7510–00	FRONT BUMPER COMP.	1					
2	J0B–K8164–00	STAY, FRONT BUMPER (L.H)	1					
3	95812–08016	BOLT, FLANGE	2					
4	95812–08050	BOLT, FLANGE	2					
5	95302–08700	NUT, HEXAGON	2					
6	95822–06012	BOLT, FLANGE	4					
7	JW8–K7540–00	REAR BUMPER COMP.	1					
8	95602–10200	NUT, S/L FLANGE	2					

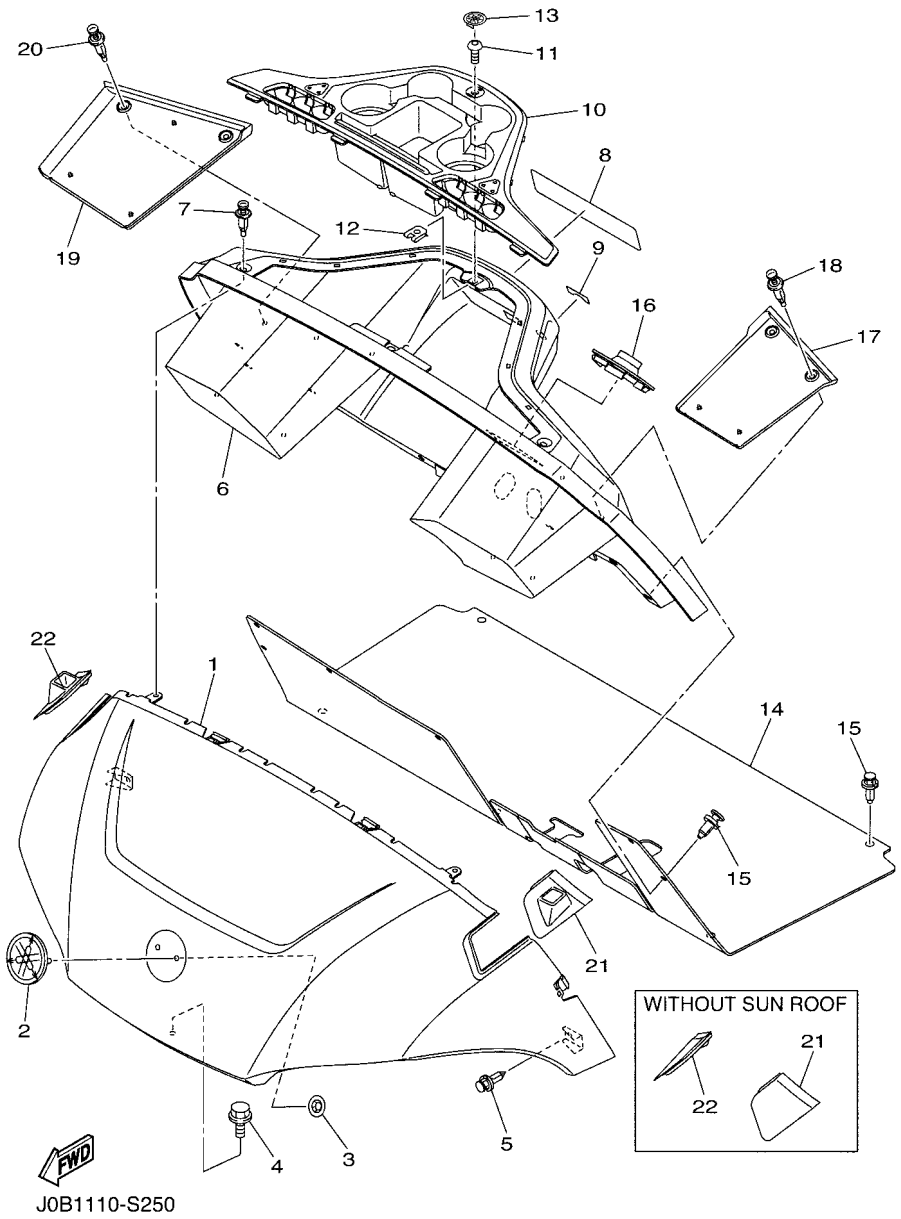

FIG. 26 BODY

REF. NO.	PART NO.	DESCRIPTION	J0B1					REMARKS
1	J0B–K8115–A0	COWL, FRONT	1					UR FOR BW1
	J0B–K8115–10	COWL, FRONT	1					UR FOR VDGS1
	J0B–K8115–00	COWL, FRONT	1					UR FOR DNBME
	J0B–K8115–20	COWL, FRONT	1					UR FOR LNYM8
	J0B–K8115–30	COWL, FRONT	1					UR FOR LNMP
	J0B–K8115–40	COWL, FRONT	1					UR FOR DYNM2
	J0B–K8115–B0	COWL, FRONT	1					UR FOR NYS4
	J0B–K8115–50	COWL, FRONT	1					UR FOR HTR
	J0B–K8115–60	COWL, FRONT	1					UR FOR DNMC
2	J0B–F4161–00	EMBLEM 1	1					
3	JU0–K7573–00	NUT, SPECIAL	2					
4	90105–06831	BOLT, FLANGE	1					
5	90269–06804	RIVET	2					
6	J0B–K8114–00	PANEL, FRONT	1					
7	90269–07803	RIVET	3					
8	J0B–K7768–00	LABEL, WARNING 8	1					UR ENGLISH
	J0B–K7768–10	LABEL, WARNING 8	1					UR ENGLISH/FRENCH
	J0B–K7768–20	LABEL, WARNING 8	1					UR GERMAN/SPANISH
9	J0B–K8282–00	PLATE, SWITCH PANEL	1					
10	J0B–K835E–00	HOLDER, BEVERAGE	1					
11	90111–05805	BOLT,HEX. SOCKET BUTTON	1					
12	90183–05008	NUT, SPRING	1					
13	J0B–H2370–00	PLUG CAP ASSY	1					
14	J0B–K8233–00	MAT, MAIN FLOOR 3	1					
15	90269–09003	RIVET	12					
16	J0B–K8273–00	COVER, HOLE	1					
17	J0B–K8243–00	MAT, REAR BODY SIDE (LH)	1					

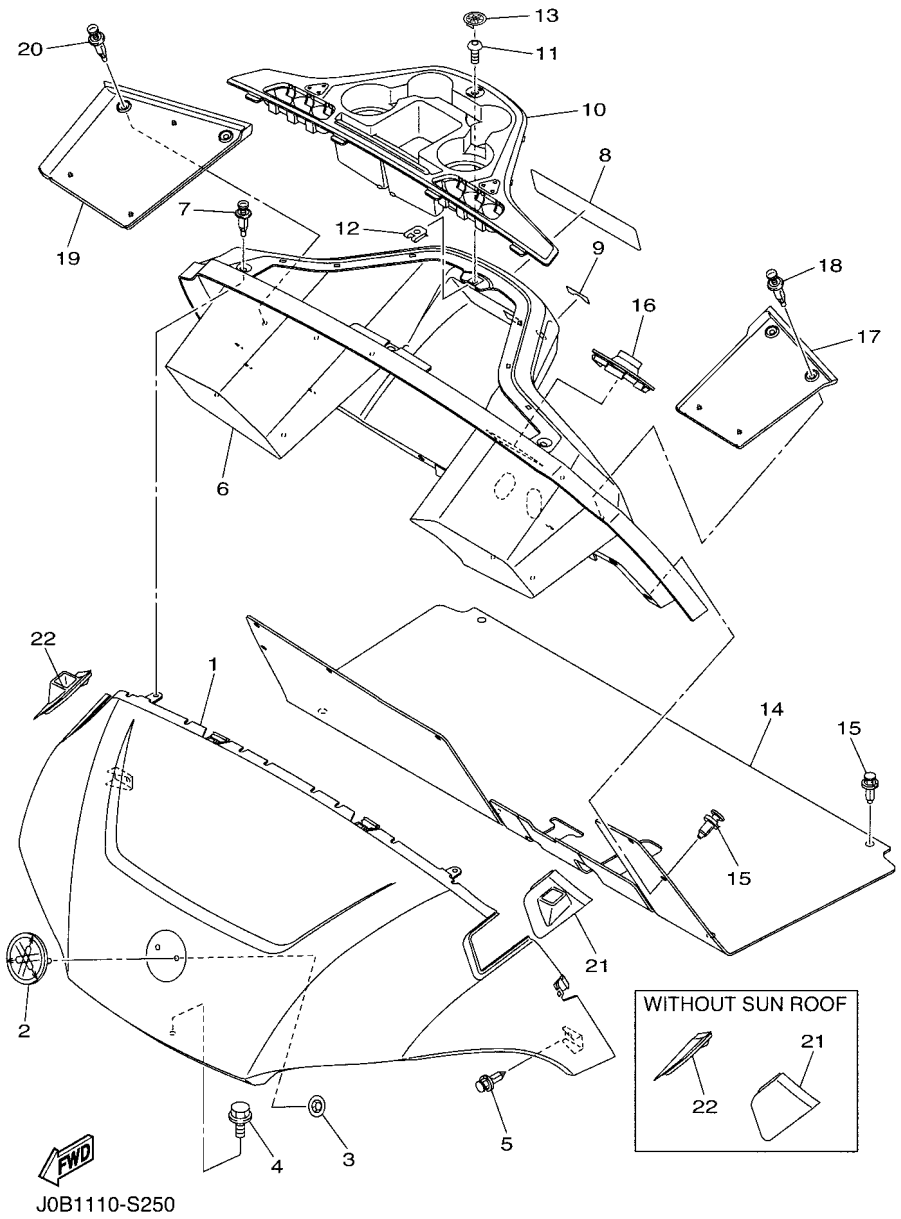

FIG. 26 BODY

REF. NO.	PART NO.	DESCRIPTION	J0B1					REMARKS
18	90269–07803	RIVET	2					
19	J0B–K8244–00	MAT, REAR BODY SIDE (RH)	1					
20	90269–07803	RIVET	2					
21	J0B–K832F–10	GROMMET, ROOF SUPPORT 1	1					WITH SUN ROOF
	J0B–K832F–00	GROMMET, ROOF SUPPORT 1	1					WITHOUT SUN ROOF
22	J0B–K832G–10	GROMMET, ROOF SUPPORT 2	1					WITH SUN ROOF
	J0B–K832G–00	GROMMET, ROOF SUPPORT 2	1					WITHOUT SUN ROOF

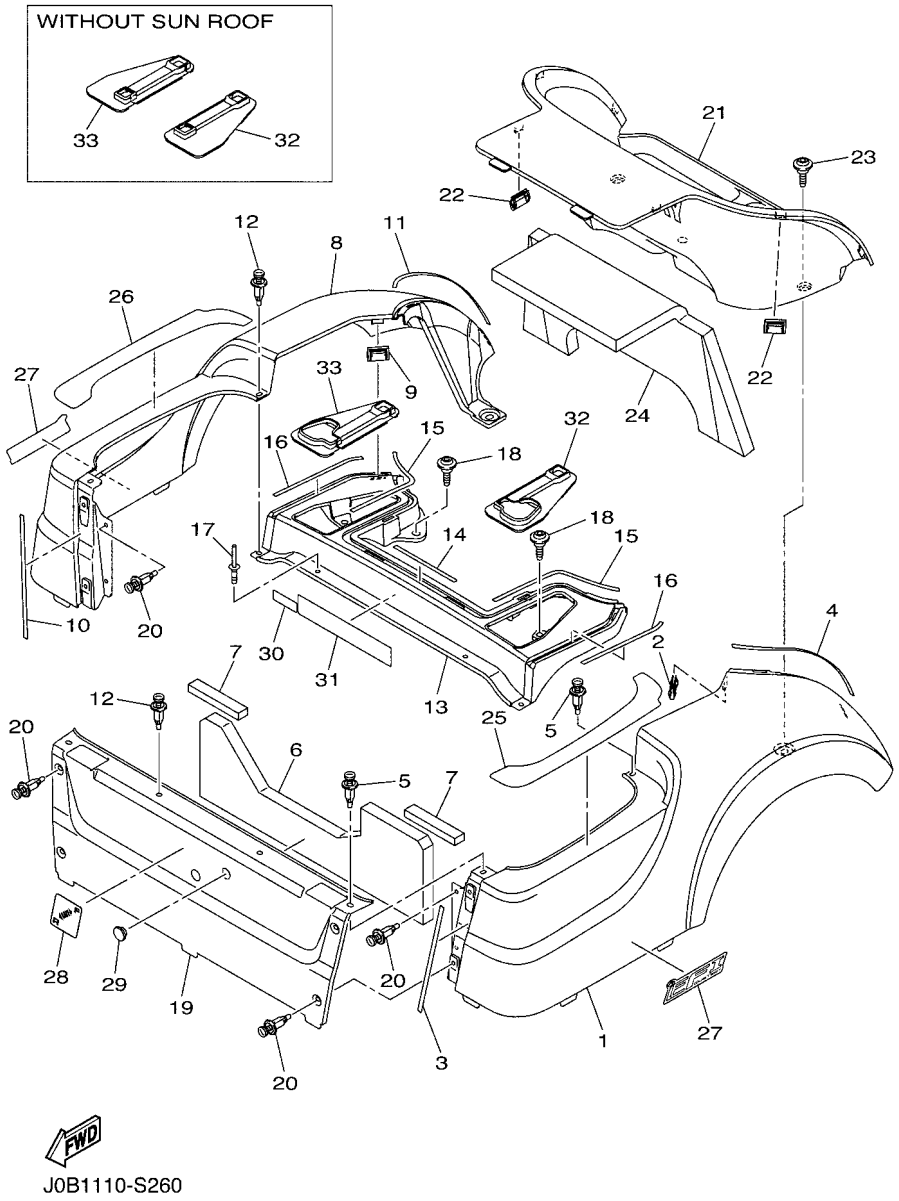

J0B1110-S260

FIG. 27 BODY 2

REF. NO.	PART NO.	DESCRIPTION	J0B1					REMARKS
1	J0B–K8111–A0	PANEL, BODY SHELL	1					UR FOR BW1
	J0B–K8111–10	PANEL, BODY SHELL	1					UR FOR VDGS1
	J0B–K8111–00	PANEL, BODY SHELL	1					UR FOR DNBME
	J0B–K8111–20	PANEL, BODY SHELL	1					UR FOR LNYM8
	J0B–K8111–30	PANEL, BODY SHELL	1					UR FOR LNMP
	J0B–K8111–40	PANEL, BODY SHELL	1					UR FOR DYNM2
	J0B–K8111–B0	PANEL, BODY SHELL	1					UR FOR NYS4
	J0B–K8111–50	PANEL, BODY SHELL	1					UR FOR HTR
	J0B–K8111–60	PANEL, BODY SHELL	1					UR FOR DNMC
2	J0B–F3447–00	CLIP	1					
3	J0B–K814E–00	SEAL, BODY SIDE 1	1					
4	J0B–K814F–00	SEAL, BODY SIDE 2	1					
5	90269–07803	RIVET	3					
6	J0B–K8251–00	PAD, SILENCER 1	1					
7	J0D–K825G–00	PAD, SILENCER 13	2					
8	J0B–K8112–A0	PANEL, BODY SHELL	1					UR FOR BW1
	J0B–K8112–10	PANEL, BODY SHELL	1					UR FOR VDGS1
	J0B–K8112–00	PANEL, BODY SHELL	1					UR FOR DNBME
	J0B–K8112–20	PANEL, BODY SHELL	1					UR FOR LNYM8
	J0B–K8112–30	PANEL, BODY SHELL	1					UR FOR LNMP
	J0B–K8112–40	PANEL, BODY SHELL	1					UR FOR DYNM2
	J0B–K8112–B0	PANEL, BODY SHELL	1					UR FOR NYS4
	J0B–K8112–50	PANEL, BODY SHELL	1					UR FOR HTR
	J0B–K8112–60	PANEL, BODY SHELL	1					UR FOR DNMC
9	J0B–F3447–00	CLIP	1					
10	J0B–K814E–00	SEAL, BODY SIDE 1	1					
11	J0B–K814F–00	SEAL, BODY SIDE 2	1					

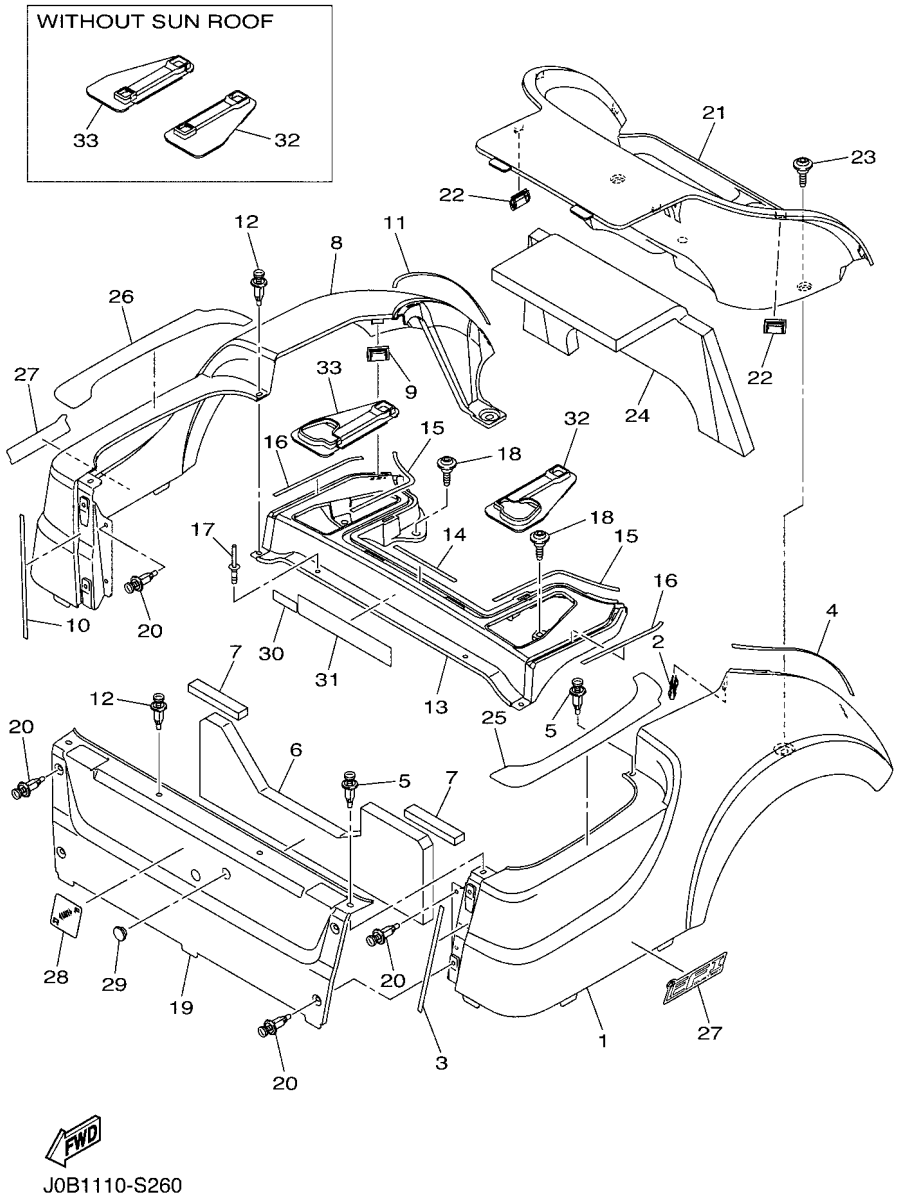

J0B1110-S260

FIG. 27 BODY 2

REF. NO.	PART NO.	DESCRIPTION	J0B1					REMARKS
12	90269–07803	RIVET	3					
13	J0B–K819H–00	SHELL, REAR BODY	1					
14	J0B–K814R–00	SEAL, BODY SIDE 3	1					
15	J0B–K814T–00	SEAL, BODY SIDE 4	2					
16	J0B–K814U–00	SEAL, BODY SIDE	2					
17	JW7–K7329–00	RIVET	2					
18	J0B–F1738–00	BOLT	4					
19	J0B–K8141–A0	PANEL, INTERMEDIATE BODY	1					UR FOR BW1
	J0B–K8141–10	PANEL, INTERMEDIATE BODY	1					UR FOR VDGS1
	J0B–K8141–00	PANEL, INTERMEDIATE BODY	1					UR FOR DNBME
	J0B–K8141–20	PANEL, INTERMEDIATE BODY	1					UR FOR LNYM8
	J0B–K8141–30	PANEL, INTERMEDIATE BODY	1					UR FOR LNMP
	J0B–K8141–40	PANEL, INTERMEDIATE BODY	1					UR FOR DYNM2
	J0B–K8141–B0	PANEL, INTERMEDIATE BODY	1					UR FOR NYS4
	J0B–K8141–50	PANEL, INTERMEDIATE BODY	1					UR FOR HTR
	J0B–K8141–60	PANEL, INTERMEDIATE BODY	1					UR FOR DNMC
20	90269–07803	RIVET	8					
21	J0B–K8237–01	COVER, REAR FLOOR	1					
22	J0B–F3447–00	CLIP	4					
23	J0B–F1738–00	BOLT	2					
24	J0B–K8255–01	PAD, SILENCER 5	1					
25	J0B–F2873–01	SEAL 1	1					
26	J0B–F2874–01	SEAL 2	1					
27	J0B–F1781–00	EMBLEM 1	2					
28	JW1–K7741–00	INDICATOR 1	1					
29	JR1–K8139–00	CAP, END	1					
30	JN6–H2377–00	LABEL	1					

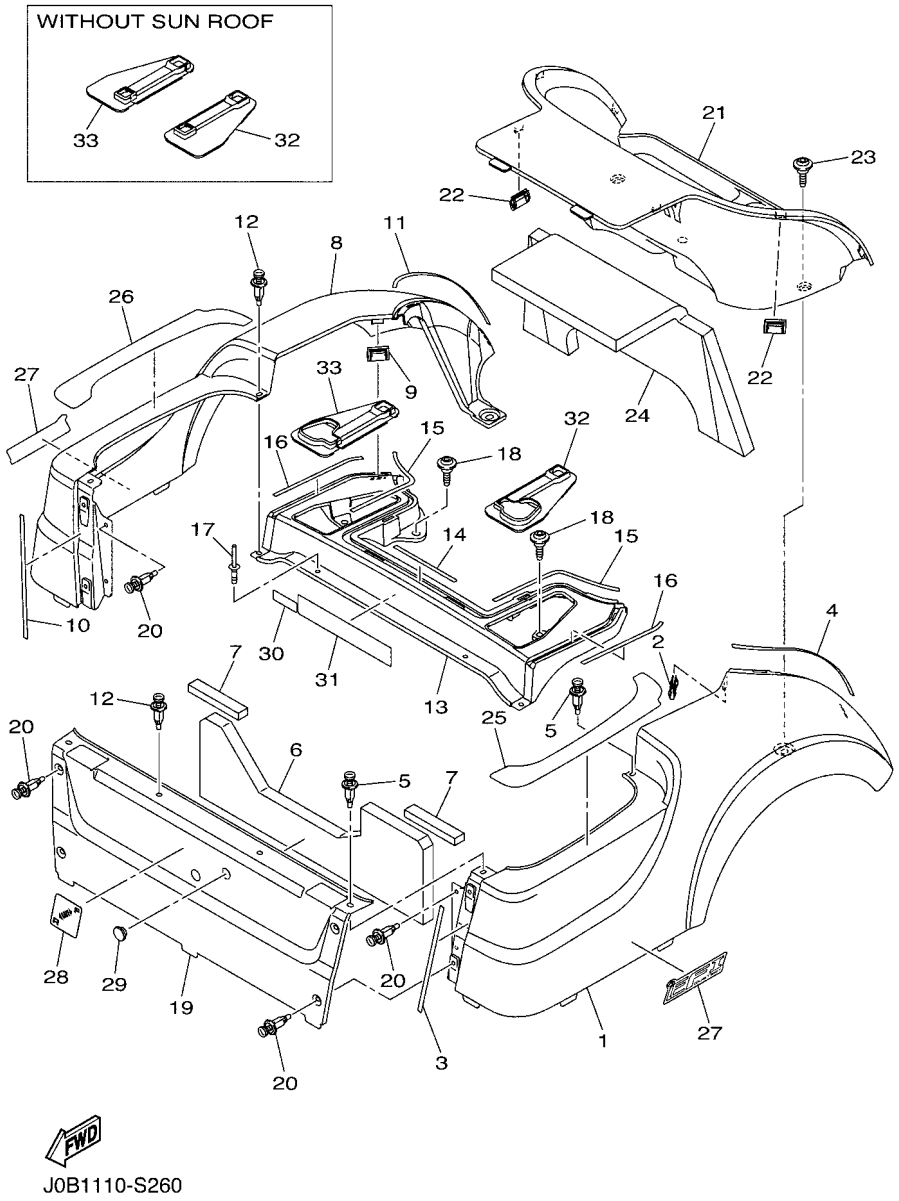

J0B1110-S260

FIG. 27 BODY 2

REF. NO.	PART NO.	DESCRIPTION	J0B1					REMARKS
31	JW1–K8297–02	PLATE, CAUTION 1	1					UR FOR CAN
	JW1–K8297–11	PLATE, CAUTION 1	1					UR EXCEPT FOR CAN
32	J0B–K817H–10	TRIM, SIDE PANEL 1	1					WITH SUN ROOF
	J0B–K817H–00	TRIM, SIDE PANEL 1	1					WITHOUT SUN ROOF
33	J0B–K817J–10	TRIM, SIDE PANEL 2	1					WITH SUN ROOF
	J0B–K817J–00	TRIM, SIDE PANEL 2	1					WITHOUT SUN ROOF

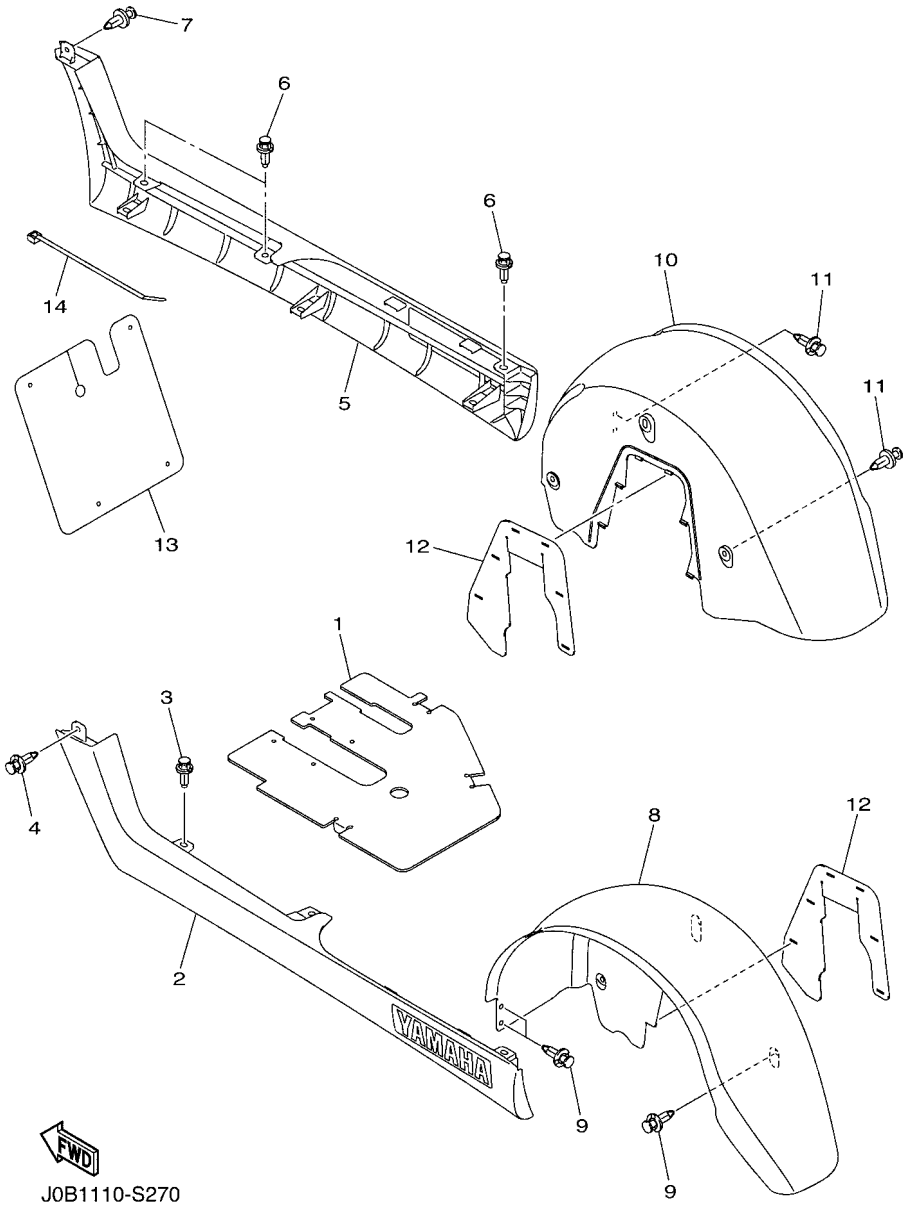

FIG. 28 BODY FITTING

REF. NO.	PART NO.	DESCRIPTION	J0B1					REMARKS
1	J0B–K8271–00	SERVICE LID, PEDAL	1					
2	J0B–K818A–00	PROTECTOR, SIDE PLATE	1					
3	90269–09003	RIVET	3					
4	90269–06804	RIVET	1					
5	J0B–K818B–00	PROTECTOR, SIDE PLATE 2	1					
6	90269–09003	RIVET	3					
7	90269–06804	RIVET	1					
8	J0B–K8191–00	PANEL, REAR FENDER 1	1					
9	90269–06804	RIVET	5					
10	J0B–K8192–00	PANEL, REAR FENDER 2	1					
11	90269–06804	RIVET	5					
12	J0B–K8197–01	FLAP, REAR FENDER	2					
13	J0B–K8187–00	FLAP, FRONT FENDER	1					
14	90464–76800	CLAMP	4					

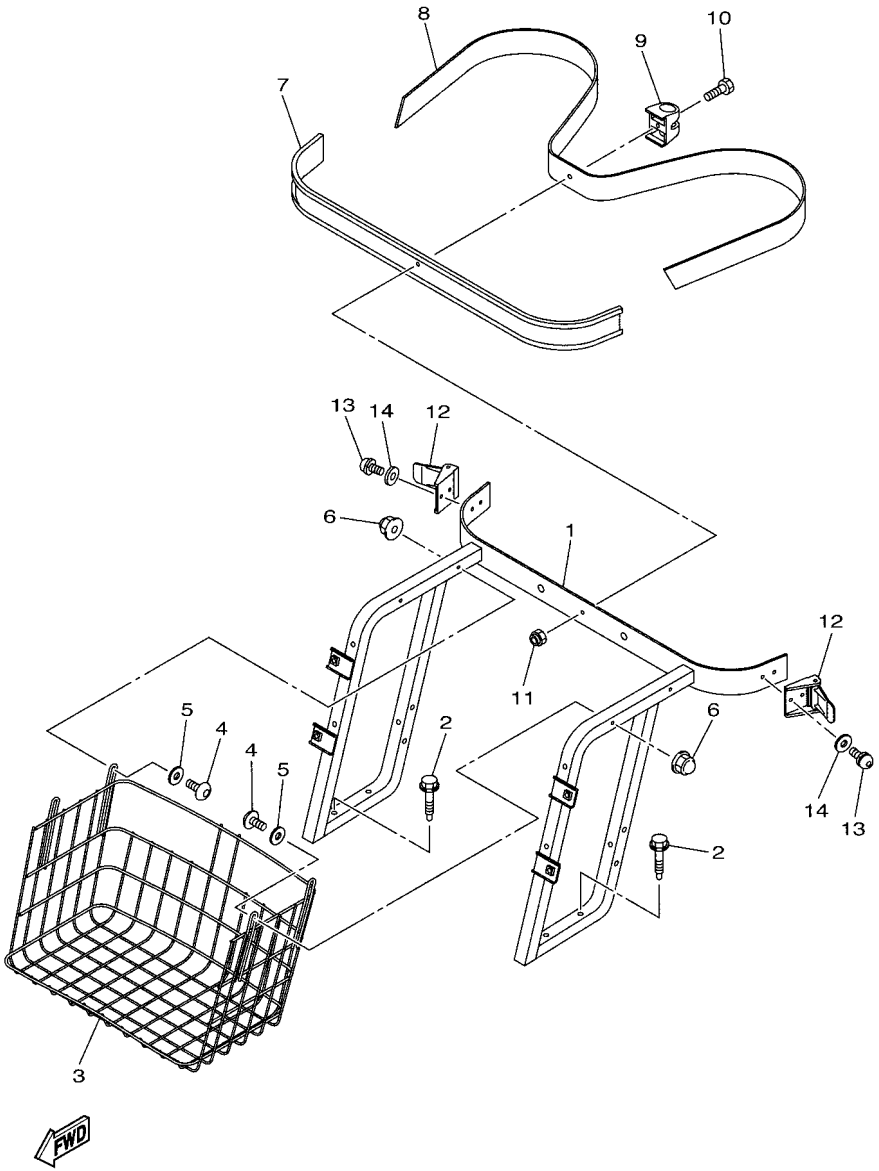

J0B1110-S280

FIG. 29 CARRIER

REF. NO.	PART NO.	DESCRIPTION	J0B1					REMARKS
1	J0B–K8423–00	SUPPORT, SEAT BACK	1					
2	90109–08002	BOLT	4					
3	JW1–K8340–00	LUGGAGE RACK ASSY., REAR	1					
4	92017–06040	BOLT, BUTTON HEAD	4					
5	J0B–K7389–00	WASHER	4					
6	90176–06008	NUT, CROWN	4					
7	JF2–K8356–00	PAD, BAG SUPPORT	1					
8	JN6–K8355–20	BAND	1					
9	JW1–K834G–00	HOLDER, RAKE SAND	1					
10	9708R–06020	BOLT	1					
11	90185–06836	NUT, SELF-LOCKING	1					
12	JN6–K8380–00	LOCK ASSY	2					
13	90159–06845	SCREW, WITH WASHER	4					
14	9299R–06200	WASHER	4					

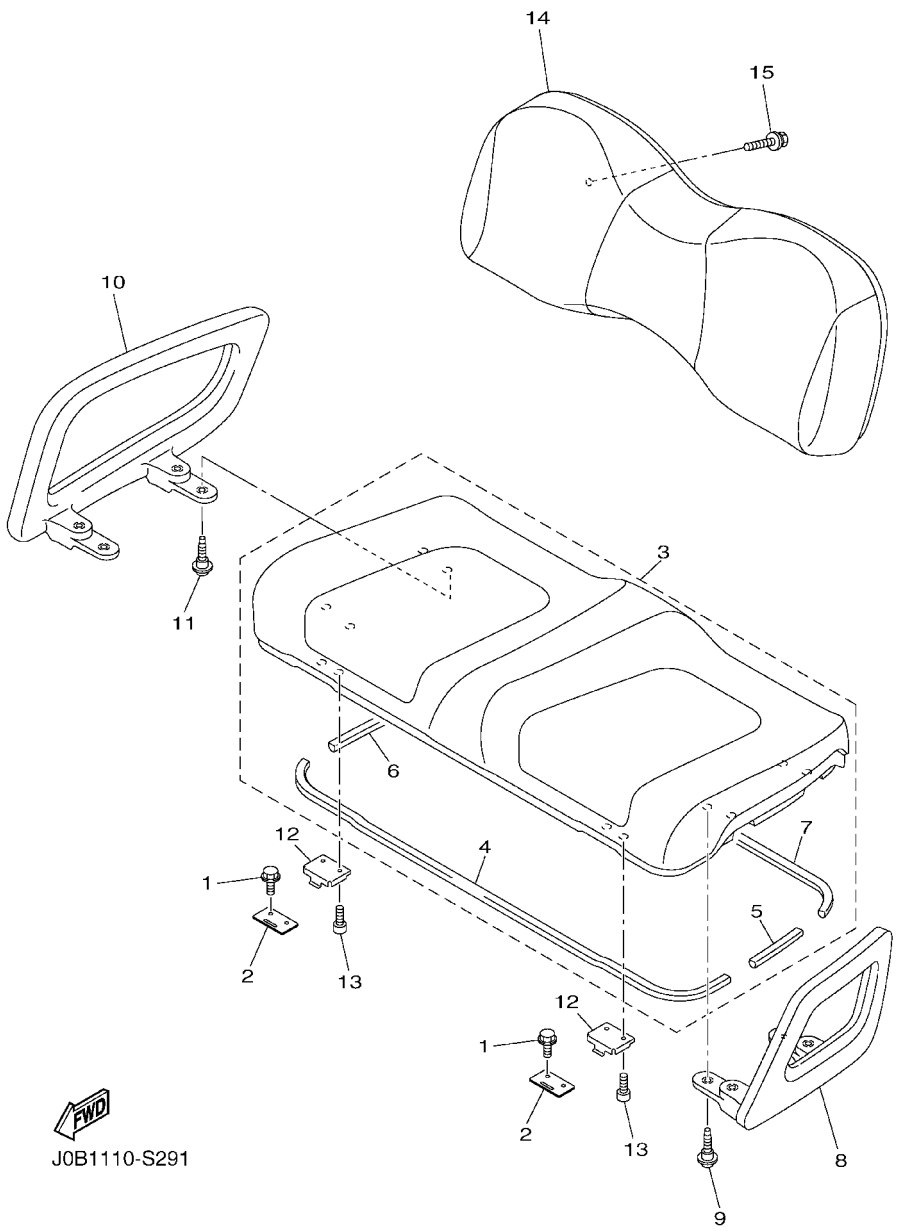

FIG. 30 SEAT

REF. NO.	PART NO.	DESCRIPTION	J0B1					REMARKS
1	JW9–H1674–00	BOLT	4					
2	J0B–K8427–00	HINGE, SEAT 2	2					
3	J0B–K8401–00	SEAT SUB-ASSY,CUSHION	1					
4	J0B–K8245–00	.SEAL 1	1					
5	J0B–K8246–00	.SEAL 2	1					
6	J0B–K8247–00	.SEAL 3	1					
7	J0B–K8248–00	.SEAL 4	1					
8	J0B–K8361–00	ARM REST 1	1					
9	J0B–F1738–00	BOLT	4					
10	J0B–K8362–00	ARM REST 2	1					
11	J0B–F1738–00	BOLT	4					
12	J0B–K8426–10	HINGE, SEAT 1	2					
13	90110–06125	BOLT, HEXAGON SOCKET HEAD	4					
14	JW1–K8402–10	SEAT SUB ASSY, BACK	1					
15	90119–06808	BOLT, WITH WASHER	4					

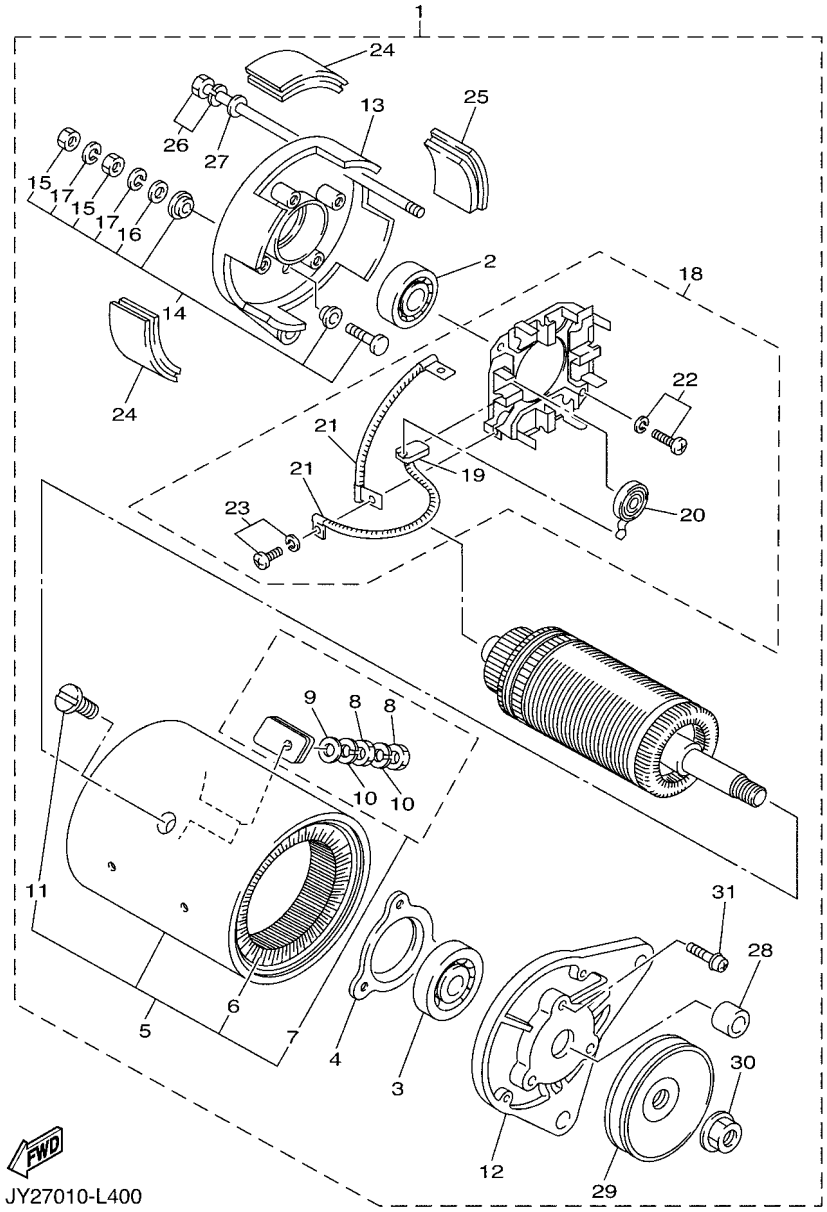

FIG. 31 STARTING MOTOR

REF. NO.	PART NO.	DESCRIPTION	J0B1					REMARKS
1	JN6–H1100–04	STARTER GENERATOR ASSY	1					
2	J10–H1157–10	.BEARING 1	1					
3	J10–H1158–10	.BEARING 2	1					
4	J10–81159–10	.HOLDER, BEARING	1					
5	JN6–H1110–10	.STATOR ASSY	1					
6	JN6–H1160–10	..FIELD COIL ASSY	1					
7	J10–81148–10	..SCREW SET 4	2					
8	9530N–06600	...NUT,HEX	2					
9	9290N–06600	...WASHER	1					
10	92907–06100	...WASHER, SPRING	2					
11	J10–81146–10	..SCREW 2	4					
12	JN6–H1165–00	.BRACKET, STARTER GENERATOR 1	1					
13	J10–H1166–10	.BRACKET, STARTER GENERATOR 2	1					
14	J10–81147–10	.SCREW SET 3	2					
15	9530N–06600	..NUT,HEX	2					
16	9290N–06600	..WASHER	1					
17	92907–06100	..WASHER, SPRING	2					
18	JN6–H1119–00	.BRUSH HOLDER ASSY	1					
19	JF2–H1111–00	..BRUSH	4					
20	JN6–H1113–00	..SPRING, BRUSH	4					
21	J10–81115–10	..WIRE, LEAD	2					
22	9850N–05016	..SCREW, PAN HEAD	2					
23	9850N–04010	..SCREW, PAN HEAD	4					
24	J10–81129–10	.COVER, BRUSH	3					
25	J10–81139–10	.COVER, BRUSH 2	1					
26	J10–H1145–10	.SCREW 1	2					
27	9290N–06600	.WASHER	2					

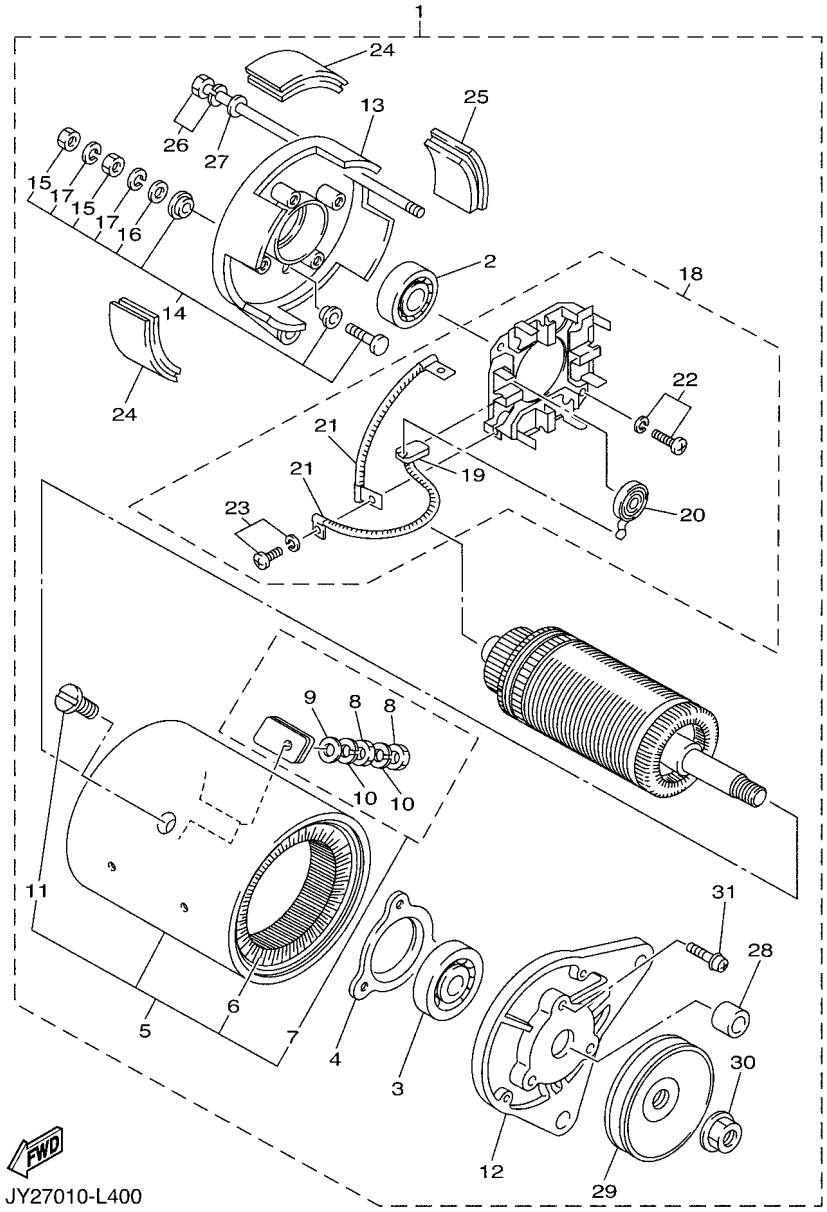

FIG. 31 STARTING MOTOR

REF. NO.	PART NO.	DESCRIPTION	J0B1					REMARKS
28	JN3–H1661–00	.SPACER	1					
29	JN6–H1161–00	.PULLEY	1					
30	90179–16889	.NUT	1					
31	9850N–05018	.SCREW, PAN HEAD	3					

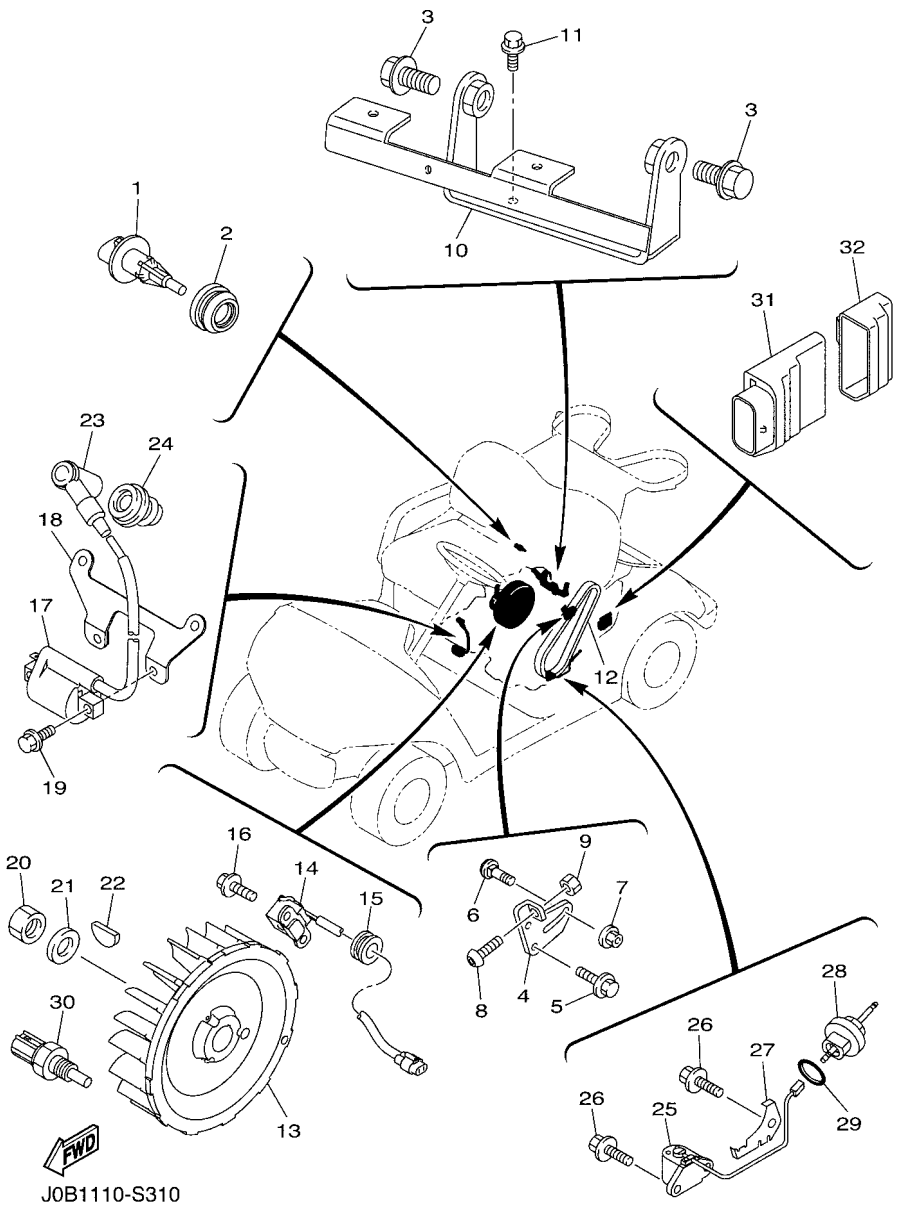

FIG. 32 ELECTRICAL 1

REF. NO.	PART NO.	DESCRIPTION	J0B1					REMARKS
1	5CA–85886–00	SENSOR, AIR TEMPRATURE	1					
2	5CA–14435–00	GROMMET	1					
3	95812–12030	BOLT, FLANGE	2					
4	JW1–H1170–11	TENSIONER ASSY	1					
5	95822–08020	BOLT, FLANGE	2					
6	90109–08827	BOLT	1					
7	95702–08500	NUT, FLANGE	1					
8	92012–06030	BOLT, BUTTON HEAD	1					
9	95302–06600	NUT, HEXAGON	1					
10	JN6–H1171–11	BRACKET, STARTER GENERATOR	1					
11	95822–08020	BOLT, FLANGE	2					
12	JW1–H1173–02	BELT	1					
13	JC0–85650–10	ROTOR ASSY	1					
14	JB2–81670–00	PICK-UP ASSY	1					
15	90480–20564	GROMMET	1					
16	95822–06016	BOLT, FLANGE	2					
17	1S4–82310–00	IGNITION COIL ASSY	1					
18	JC0–82316–00	BRACKET, IGNITION COIL	1					
19	95822–06016	BOLT, FLANGE	2					
20	95302–18600	NUT, HEXAGON	1					
21	90201–18620	WASHER, PLATE	1					
22	90280–04052	KEY, WOODRUFF	1					
23	JN6–82370–00	PLUG CAP ASSY	1					
24	JE8–82372–00	SEAL, PLUG CAP	1					
25	JT0–85720–00	OIL LEVEL GAUGE ASSY	1					
26	95822–06012	BOLT, FLANGE	3					
27	JT0–85724–00	CLAMP	1					

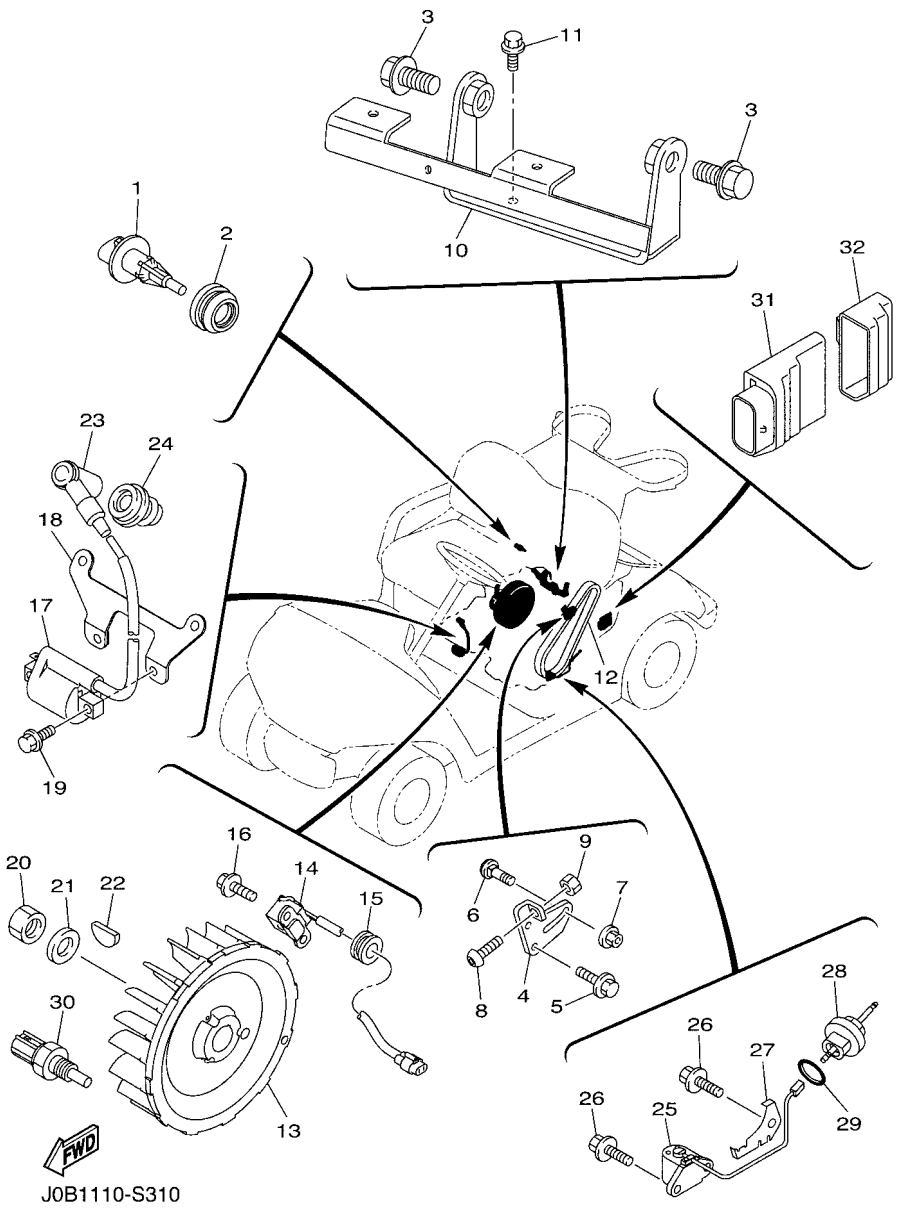

FIG. 32 ELECTRICAL 1

REF. NO.	PART NO.	DESCRIPTION	J0B1					REMARKS
28	JT0–15362–00	PLUG, OIL LEVEL	1					
29	93210–15414	O-RING	1					
30	4P9–83591–00	THERMO UNIT	1					
31	J0B–H591A–01	ENGINE CONTROL UNIT ASSY	1					
32	J0B–H5546–00	BAND	1					

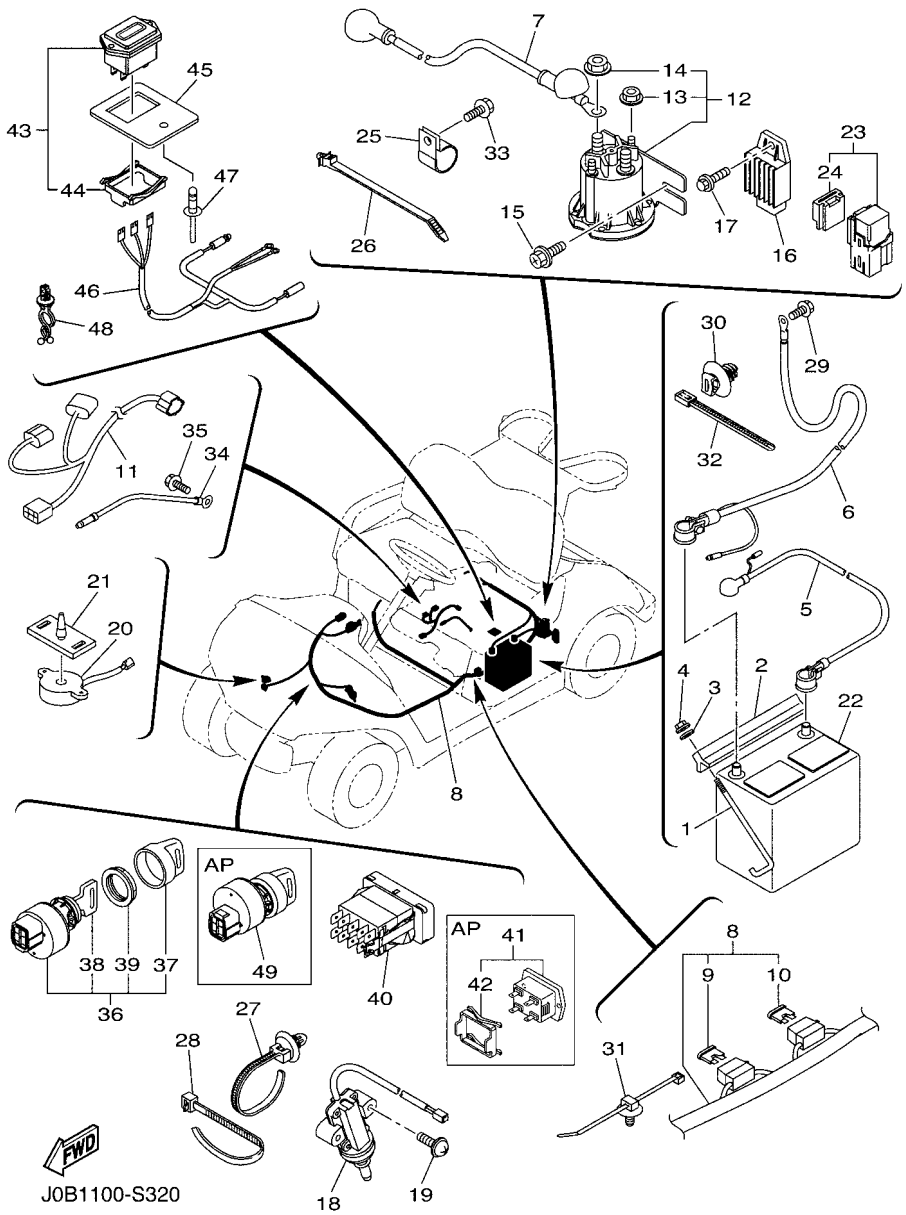

FIG. 33 ELECTRICAL 2

REF. NO.	PART NO.	DESCRIPTION	J0B1					REMARKS
1	JW1–H2133–00	SCREW, FITTING	2					
2	J55–H2136–00	PLATE, BATTERY FITTING	1					
3	92902–06200	WASHER	2					
4	95702–06500	NUT, FLANGE	2					
5	J0B–H2115–00	WIRE, PLUS LEAD	1					
6	J0B–H2116–01	WIRE, MINUS LEAD	1					
7	J0B–H2117–00	WIRE, LEAD	1					
8	J0B–H2590–01	WIRE HARNESS ASSY	1					
9	JU7–H2151–00	.FUSE (20 A)	1					
10	JN6–H2151–00	.FUSE (10A)	1					
11	J0B–82149–01	WIRE, LEAD 3	1					
12	JW1–H1950–00	RELAY ASSY	1					
13	90179–05807	.NUT	2					
14	90179–08824	.NUT	2					
15	90105–06831	BOLT, FLANGE	2					
16	JF2–81910–10	VOLTAGE REGULATOR ASSY	1					
17	90105–06870	BOLT, FLANGE	1					
18	JF7–82817–22	SWITCH	1					
19	97602–05225	SCREW, PAN HEAD WITH WASHER	2					
20	JR1–H3383–02	BUZZER	1					
21	JN6–H3386–01	STAY, BUZZER	1					
22	*	BATTERY ASSY (GC-24, 12V)	1					LM
23	1TP–81950–00	RELAY ASSY (1TP-00)	1					
24	5EA–81952–00	.HOLDER, RELAY	1					
25	90461–14108	CLAMP	1					
26	90464–09823	CLAMP	1					
27	90464–20005	CLAMP	1					

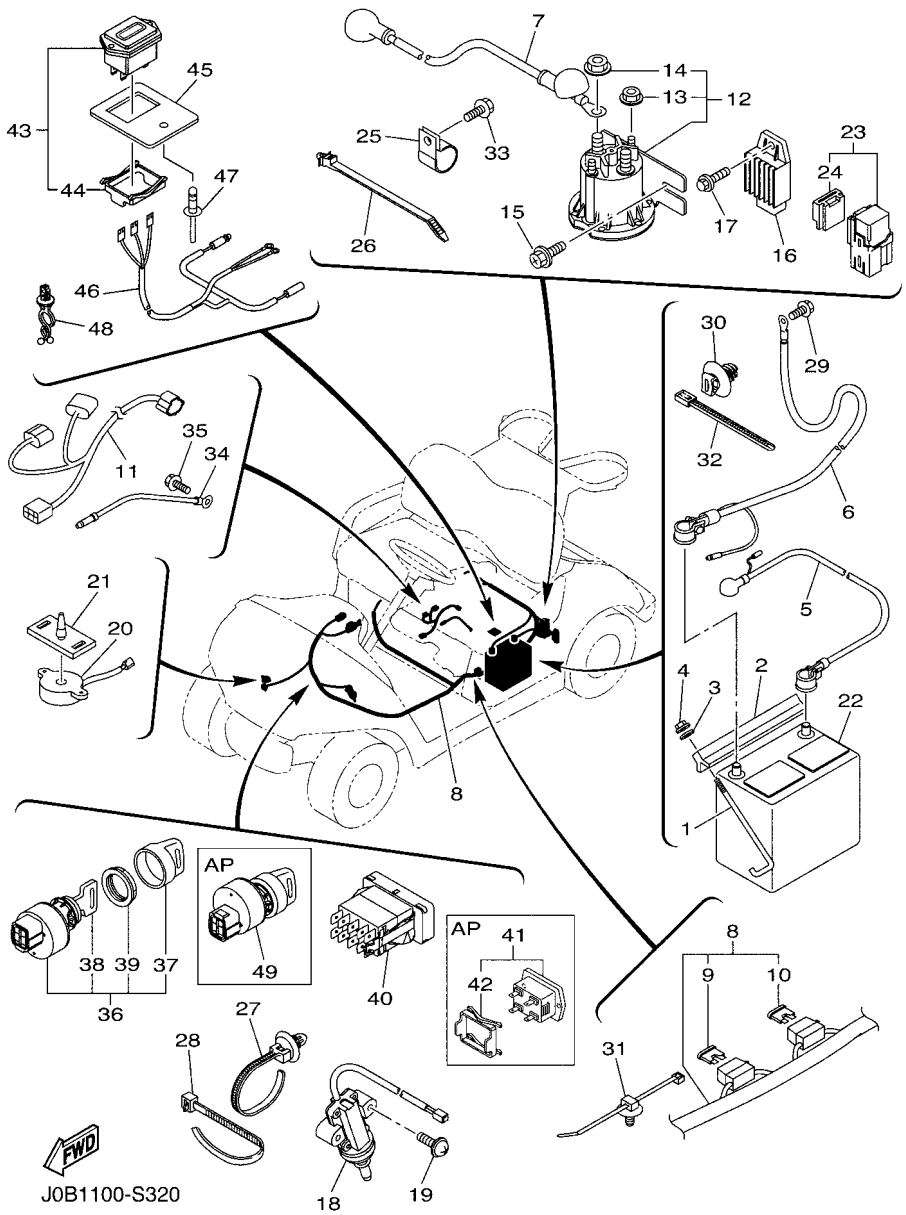

FIG. 33 ELECTRICAL 2

REF. NO.	PART NO.	DESCRIPTION	J0B1					REMARKS
28	90464–48800	CLAMP	1					
29	90105–08867	BOLT, FLANGE	1					
30	5UG–F2465–10	HOLDER	1					
31	1NS–F1338–00	CLAMP	3					
32	90464–40825	CLAMP	2					
33	90119–06868	BOLT, WITH WASHER	1					
34	JC0–82519–00	WIRE, EARTH LEAD	1					
35	95822–06012	BOLT, FLANGE	1					
36	JW1–H2510–00	MAIN SWITCH ASSY	1					STD
37	5UG–H2579–00	.CAP, KEY	1					
38	JU2–H2511–00	.KEY, MAIN SWITCH	2					
39	JU6–H2569–00	.NUT, MAIN SWITCH	1					
40	JW8–H3530–00	PILOT LIGHT ASSY	1					STD
41	JN6–H351C–10	GAUGE 1	1					AP
42	JW1–H1128–00	.CLAMP	1					
43	JN6–H351C–10	GAUGE 1	1					EXCEPT FOR CAN
44	JW1–H1128–00	.CLAMP	1					EXCEPT FOR CAN
45	J0B–F4881–00	BRKT., METER	1					EXCEPT FOR CAN
46	JW1–H2386–10	EXTENSION, WIRE HARNESS	1					EXCEPT FOR CAN
47	JW7–K7329–00	RIVET	1					EXCEPT FOR CAN
48	90464–12836	CLAMP	1					EXCEPT FOR CAN
49	JU2–H2510–20	MAIN SWITCH ASSY	1					AP RANDOMEKEY

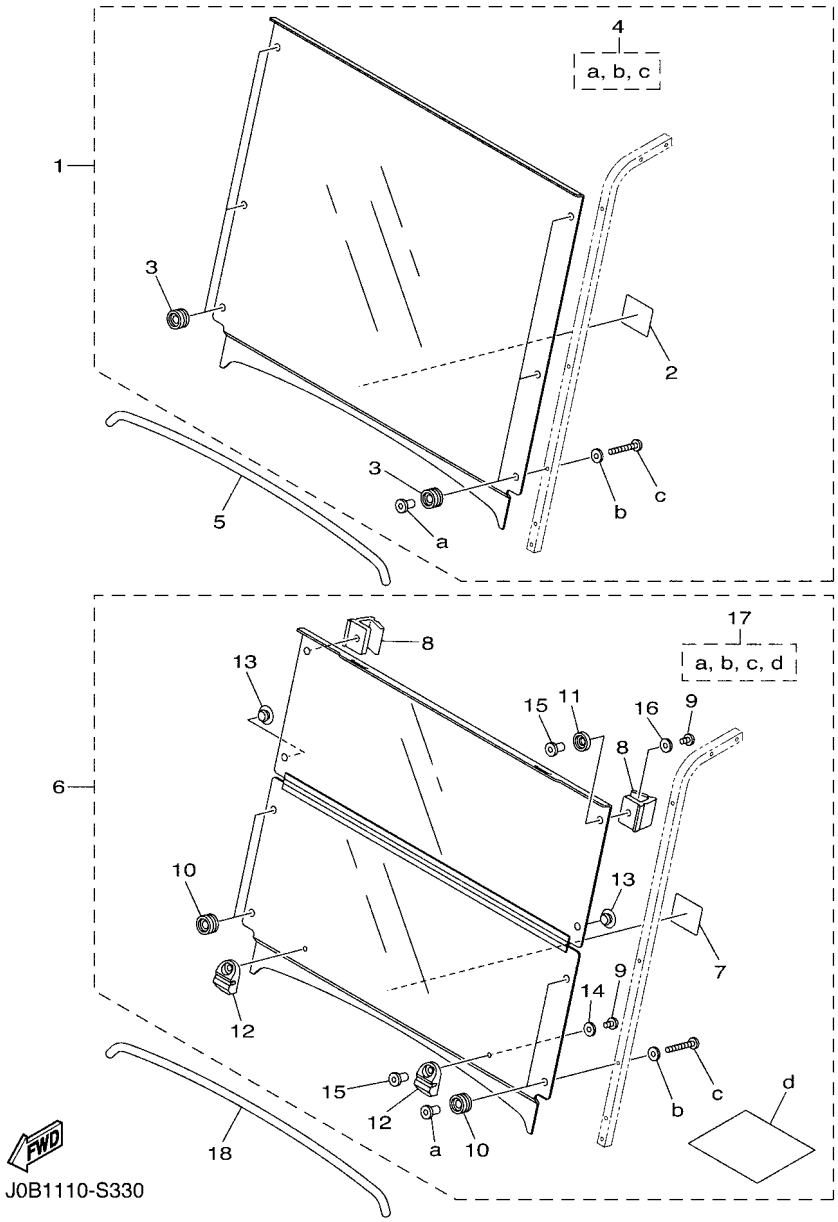

FIG. 34 ALTERNATE FOR WINDSHIELD

REF. NO.	PART NO.	DESCRIPTION	J0B1					REMARKS
1	J0B–K7200–00	WINDSHIELD ASSY	1					UR CLEAR
	J0B–K7200–10	WINDSHIELD ASSY	1					UR SMOKE
2	J0B–K7458–00	.LABEL, WARNING	1					
3	J0B–K7237–00	.GROMMET	6					
4	J0B–K7240–00	.WIND SHIELD HARDWARE KIT 1	1					
5	J0B–K7213–00	TRIM, UPPER	1					
6	J0B–K7200–20	WINDSHIELD ASSY	1					UR CLEAR
	J0B–K7200–30	WINDSHIELD ASSY	1					UR SMOKE
7	J0B–K7458–00	.LABEL, WARNING	1					
8	J0B–K7173–20	.LEVER, LATCH 1	2					
9	J0B–K7258–00	.SCREW, 2	4					
10	J0B–K7237–00	.GROMMET	2					
11	J0B–K7247–00	.GROMMET, W/S 2	2					
12	J0B–K7257–00	.GROMMET, W/S 3	2					
13	J0B–K7238–00	.DAMPER	2					
14	J0B–K7218–00	.WASHER 1	2					
15	J0B–K7217–00	.NUT, WIND SHIELD	4					
16	J0B–K7219–00	.WASHER 2	2					
17	J0B–K7240–20	.WIND SHIELD HARDWARE KIT 1	1					
18	J0B–K7213–00	TRIM, UPPER	1					

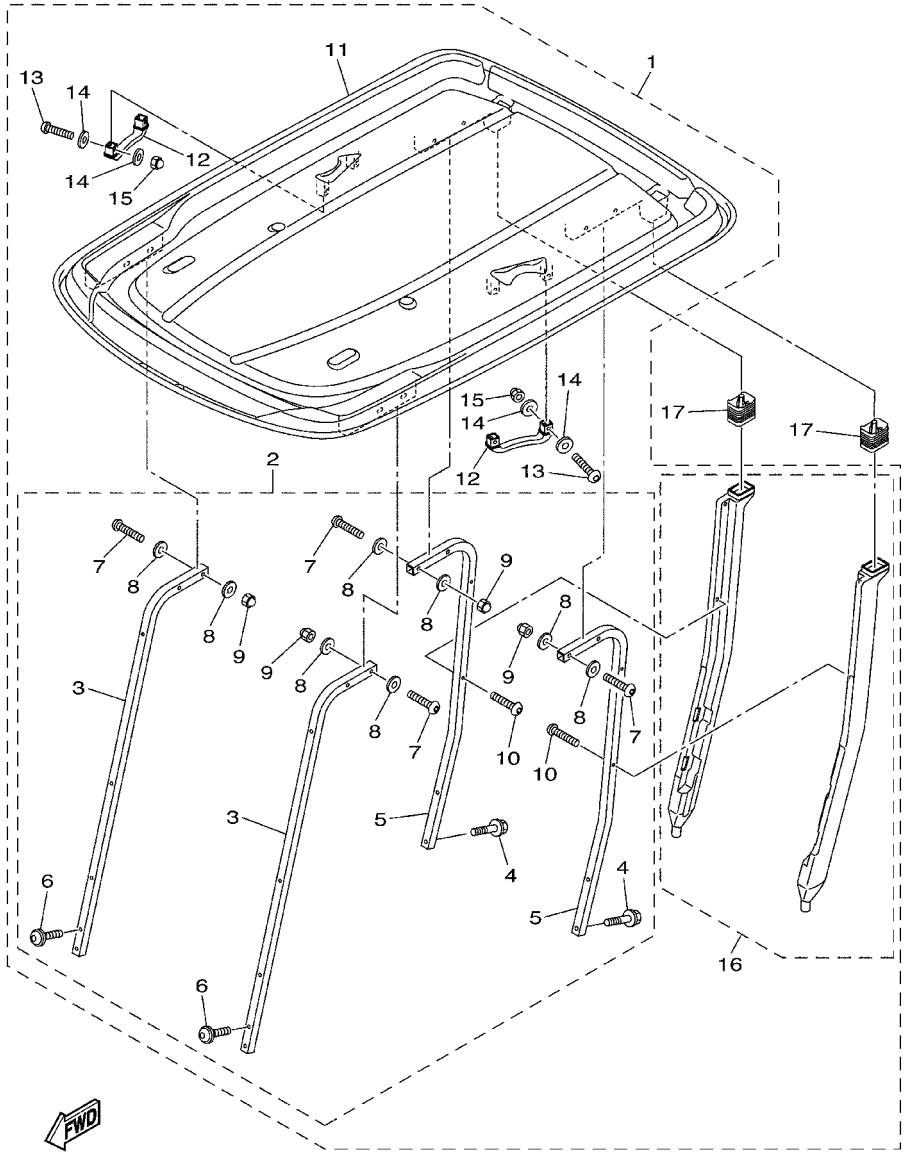

J1B1400-S151

FIG. 35 ALTERNATE FOR SUN ROOF

REF. NO.	PART NO.	DESCRIPTION	J0B1					REMARKS
1	J0B–K84A0–00	SUN TOP KIT	1					UR AP TAN
	J0B–K84A0–10	SUN TOP KIT	1					UR AP BLACK
2	J0B–K84A2–00	.HARDWARE KIT, SUN TOP	1					
3	J0B–K8312–00	..SUPPORT, SUN ROOF 1	2					
4	JW1–K8388–00	..BOLT, ROOF 1	4					
5	JW1–K8313–01	..SUPPORT, SUN ROOF 2	2					
6	J0B–K8388–00	..BOLT, ROOF 1	4					
7	JU0–K8388–00	..BOLT, ROOF 1	8					
8	JW1–F1549–01	..WASHER, FENDER MOLD	16					
9	JU0–K8398–00	..NUT, ROOF 1	8					
10	JW1–K7387–00	..SCREW	4					
11	JW1–K8314–10	.COVER, SUN ROOF	1					UR TAN
	JW1–K8314–20	.COVER, SUN ROOF	1					UR BLACK
12	JW1–K8214–00	.GRIP, HAND	2					
13	JU0–K8388–00	.BOLT, ROOF 1	4					
14	JW1–F1549–01	.WASHER, FENDER MOLD	8					
15	JU0–K8398–00	.NUT, ROOF 1	4					
16	J0B–F417A–00	.DRAIN TUBE ASSY	1					
17	JW1–F414G–10	SEAL	2					

PART NO.	REF. NO.
JT0–11111–00	2 – 1
JN6–11116–00	2 – 10
JN6–11133–10	2 – 2
JR7–11163–10	2 – 18
JN6–11168–00	2 – 11
JN6–11169–00	2 – 12
JT0–11181–00	2 – 3
JN6–11191–01	2 – 9
JN6–11193–00	2 – 13
812–11198–00	9 – 6
JN6–11400–00	3 – 1
JN6–11454–10	3 – 8
JR7–11610–00	3 – 3
JR7–11610–10	3 – 3
JR7–11610–20	3 – 3
JR7–11631–00–A0	3 – 2
583–11633–00	3 – 4
JR7–11635–00	3 – 2
JR7–11636–00	3 – 2
JN6–11650–10	3 – 6
JN6–11654–10	3 – 7
JN6–12111–10	4 – 2
J38–12117–01	4 – 6
J38–12118–00	4 – 7
4G0–12119–00	4 – 13
7RH–12121–10	4 – 3
JN6–12151–10	4 – 8
JN6–12153–10	4 – 4
JR7–12154–10	4 – 12
J38–12156–20	4 – 11
22F–12159–10	4 – 9
JR7–12170–00	4 – 1
JN6–12621–02	5 – 1
JR7–12634–00	5 – 9
JN6–12651–01	5 – 3
JN6–12652–00	5 – 5
JR7–12658–00	5 – 4
JC0–13542–00	7 – 3
JC0–13567–00	6 – 4
JN6–13567–00	6 – 3
	6 – 5
JC0–13595–00	6 – 1
J0B–13750–00	7 – 1
J0B–13770–00	7 – 5
J0B–13907–00	15 – 10
52S–13938–00	7 – 6
J0B–13971–00	15 – 14
52B–14137–00	7 – 7

PART NO.	REF. NO.
52B–14147–00	7 – 8
5CA–14147–00	7 – 9
3B4–14424–00	6 – 14
J0B–14430–00	8 – 7
5CA–14435–00	32 – 2
7KY–14613–01	8 – 3
JC0–15111–01	9 – 1
J38–15361–00	9 – 18
JT0–15362–00	32 – 28
796–15363–01	9 – 16
JN6–15411–01	9 – 8
JY2–15451–00	9 – 12
J0B–19001–10	1 – 1
JT0–21481–00	10 – 5
401–22128–01	13 – 16
2NL–23448–00	13 – 9
5KM–23448–00	11 – 37
2NL–23517–00	13 – 11
5UG–23517–10	11 – 38
2HR–23526–00	11 – 41
	13 – 3
JW8–23841–01	14 – 27
4WM–24180–00	15 – 16
1S3–24486–00	15 – 12
18P–24491–00	15 – 11
J38–27204–00	18 – 3
J38–27205–00	18 – 14
J55–27260–00	18 – 19
J55–27270–00	18 – 8
J10–27282–00	18 – 5
	18 – 16
J0B–27951–00	19 – 1
J38–27959–00	19 – 5
B88–2817K–00	15 – 7
J10–81115–10	31 – 21
J10–81129–10	31 – 24
J10–81139–10	31 – 25
J10–81146–10	31 – 11
J10–81147–10	31 – 14
J10–81148–10	31 – 7
J10–81159–10	31 – 4
JB2–81670–00	32 – 14
JF2–81910–10	33 – 16
1TP–81950–00	33 – 23
5EA–81952–00	33 – 24
J0B–82149–01	33 – 11
1S4–82310–00	32 – 17
JC0–82316–00	32 – 18

PART NO.	REF. NO.
JN6–82370–00	32 – 23
JE8–82372–00	32 – 24
JE8–82372–00	7 – 2
JC0–82519–00	33 – 34
JN3–82617–01	23 – 17
JF7–82817–22	33 – 18
4P9–83591–00	32 – 30
JC0–85650–10	32 – 13
JT0–85720–00	32 – 25
JT0–85724–00	32 – 27
5CA–85886–00	32 – 1
J0B–E1166–00	2 – 16
JW8–E1923–00	22 – 5
J0B–E2691–00	5 – 7
J0B–E4411–01	6 – 13
J0B–E4412–00	6 – 10
J0B–E4413–00	6 – 16
J0B–E4437–00	6 – 21
J0B–E4451–01	6 – 11
J0B–E4453–01	6 – 23
JU0–E445E–00	6 – 12
J0B–E4710–01	8 – 1
JW1–E4713–00	8 – 4
J0B–E5471–00	6 – 18
JW8–E7688–00	21 – 7
J0B–F125J–00	12 – 29
1NS–F1338–00	33 – 31
JW8–F135J–00	20 – 7
	21 – 4
J0B–F1411–00	10 – 1
J0B–F1419–01	10 – 4
J0B–F1436–00	8 – 2
J0B–F1485–00	10 – 8
J0B–F1531–00	11 – 3
JW1–F1549–01	35 – 8
	35 – 14
J0B–F1738–00	12 – 9
	12 – 10
	12 – 11
	12 – 28
	27 – 18
	27 – 23
	30 – 5
	30 – 7
JW1–F1738–00	15 – 8
J0B–F1781–00	27 – 27
J0B–F2110–02	11 – 1
J0B–F2127–00	12 – 14

PART NO.	REF. NO.
J0B–F2171–01	11 – 35
J0B–F2210–00	11 – 9
	11 – 21
5UG–F2465–10	33 – 30
J0B–F2501–00	12 – 1
J0B–F253B–00	12 – 4
J0B–F255G–00	12 – 2
J0B–F258E–00	12 – 12
J0B–F258R–00	12 – 17
J0B–F2873–01	27 – 25
J0B–F2874–01	27 – 26
J0B–F3113–00	11 – 14
	11 – 26
J0B–F3123–01	12 – 20
JW7–F312H–00	16 – 5
J0B–F3133–02	12 – 24
JW1–F3183–00	14 – 12
JW8–F3183–00	17 – 16
J0B–F3350–00	13 – 14
J0B–F3390–00	13 – 19
JW1–F3400–00	14 – 10
J0B–F3447–00	27 – 2
	27 – 9
	27 – 22
5UG–F3489–00	14 – 20
JU0–F3511–20	13 – 4
JW1–F3512–00	13 – 5
JU0–F3521–20	13 – 12
5UG–F3527–00	14 – 21
J0B–F3570–10	13 – 1
JW1–F3811–03	14 – 1
JW1–F3812–00	14 – 13
JW1–F3822–01	14 – 29
JU0–F3828–10	14 – 4
1P0–F3833–00	14 – 26
JW1–F3837–00	14 – 22
JN3–F3838–00	14 – 6
5UG–F3844–00	14 – 19
JU0–F3857–11	14 – 3
	14 – 5
JW1–F3866–00	14 – 24
JW1–F387A–00	14 – 11
JW1–F387E–00	14 – 14
5UG–F387F–00	14 – 17
5UG–F387G–00	14 – 15
5UG–F387J–00	14 – 18
5UG–F387K–00	14 – 16
JW1–F3894–00	14 – 25

PART NO.	REF. NO.
JC0–F4111–01	15 – 1
JW1–F4112–00	15 – 3
J0B–F413G–00	35 – 17
J0B–F413J–00	35 – 18
JW1–F414G–10	35 – 19
J0B–F4161–00	26 – 2
7CC–F4170–01	15 – 15
J0B–F417A–00	35 – 16
J0B–F419A–00	15 – 21
J0B–F4217–00	15 – 5
J0B–F4314–00	15 – 18
J0B–F4316–00	15 – 19
J0B–F4317–00	15 – 20
JU5–F4375–00	15 – 4
JW8–F4486–00	17 – 44
	17 – 48
JW1–F4610–00	15 – 2
JW1–F467K–00	14 – 23
JW8–F47E3–00	22 – 36
J0B–F4881–00	33 – 45
JW1–F5100–01	13 – 31
	24 – 5
JW8–F5103–00	13 – 21
JW8–F5118–00	24 – 7
JN6–F5118–01	13 – 29
J0B–F518F–00	24 – 9
J0B–F518G–00	24 – 10
J0B–F5310–01	24 – 1
J0B–F537W–00	11 – 16
	11 – 28
J0B–F53A1–01	11 – 10
	11 – 22
JW8–F5415–00	17 – 25
JW9–F5666–00	17 – 12
JW9–F5671–00	17 – 5
JW9–F5672–00	17 – 4
JW9–F5673–00	17 – 45
JW8–F5681–10	16 – 6
JN6–F5685–01	16 – 7
J0B–F6311–00	17 – 50
J0B–F6312–00	6 – 15
JW8–F6314–00	17 – 21
J0B–F6341–00	16 – 1
J0B–F6351–00	16 – 2
JW8–F639L–00	17 – 22
JW8–F639N–00	17 – 9
JW8–F7113–00	17 – 11
JW8–F7117–00	17 – 6

PART NO.	REF. NO.
JW8–F7118–00	17 – 41
JW8–F7119–00	17 – 28
JW8–F7121–00	17 – 13
JW9–F7200–21	17 – 2
JW8–F7213–20	17 – 34
JW8–F7217–00	17 – 32
JW8–F7218–00	17 – 10
JW9–F7221–00	17 – 14
JW9–F7228–00	17 – 23
JU0–F722H–00	22 – 7
JW9–F7231–10	17 – 18
JW9–F7232–00	17 – 19
JU0–F723F–00	22 – 35
JW9–F7245–10	17 – 30
JW9–F7246–20	17 – 46
JW8–F7280–00	18 – 1
JW8–F7281–00	18 – 4
	18 – 15
JW8–F7286–00	18 – 9
	18 – 20
JW8–F7290–00	18 – 12
JW8–F7316–01	17 – 31
JW8–F7317–00	17 – 40
JW8–F7318–00	17 – 20
JW8–F7322–00	17 – 15
J0B–F7411–01	12 – 7
J0B–F7413–01	12 – 6
JW8–F7416–00	17 – 8
JW8–F7426–01	17 – 17
JW8–F7434–00	17 – 39
JW8–F7438–00	17 – 38
JW8–F7445–31	17 – 33
JW8–F7814–21	17 – 3
	17 – 43
JW8–F7825–01	17 – 27
JW8–F7850–31	17 – 1
JW8–F7853–10	17 – 35
JW9–F7871–10	17 – 36
JW8–F7872–30	17 – 37
JW8–F815H–01	17 – 42
J0B–F8218–00	11 – 4
J0B–F8228–00	11 – 5
J0B–F8238–00	11 – 6
J0B–F8268–00	11 – 7
J0B–F8278–00	11 – 8
JW8–F8319–00	17 – 29
JW8–F8323–00	17 – 24
JW8–F8331–00	17 – 47

PART NO.	REF. NO.
JW8–F8363–00	17 – 7
J0B–G1148–00	22 – 33
J0B–G1297–00	22 – 23
J0B–G2391–00	22 – 6
JW8–G2541–00	22 – 46
JC1–G2544–00	22 – 41
J0B–G3127–00	22 – 10
J0B–G3812–00	22 – 11
JW8–G4189–00	20 – 6
J0B–G5148–00	22 – 44
JW8–G5282–00	20 – 18
JW8–G5378–00	22 – 38
JW8–G5531–00	21 – 9
JW8–G5618–00	20 – 10
	20 – 15
JW8–G5621–00	20 – 16
JW8–G5677–00	21 – 12
JW8–G5697–20	21 – 15
J0B–G580H–00	22 – 18
J0B–G6153–00	22 – 27
JW8–G6159–00	21 – 8
J0B–G6164–00	22 – 9
J0B–G6201–00	20 – 1
JW8–G6202–22	21 – 1
JW8–G6205–21	20 – 9
JW8–G6210–00	20 – 2
J0B–G6220–00	20 – 3
J0B–G6231–00	20 – 17
JW8–G6236–20	20 – 12
JW8–G6237–20	20 – 13
J0B–G6241–00	20 – 21
JW8–G6249–00	20 – 19
JW8–G624A–00	20 – 4
JW8–G624B–00	21 – 5
JW8–G6251–21	20 – 8
JW8–G6253–00	20 – 5
JW8–G6260–22	21 – 2
JW8–G6270–21	21 – 3
JW8–G6275–10	21 – 11
JW8–G6284–00	21 – 6
J0B–G6301–00	22 – 2
J0B–G6314–00	22 – 31
J0B–G6316–00	22 – 24
J0B–G6320–00	22 – 8
J0B–G6326–00	22 – 25
J0B–G6327–00	22 – 30
J0B–G633E–00	22 – 3
J0B–G633G–00	22 – 26

PART NO.	REF. NO.
JN3–G6344–00	22 – 45
J0B–G6355–00	22 – 43
J0B–G6356–00	22 – 20
J0B–G6371–00	23 – 3
J0B–G6372–00	23 – 15
JW8–G6374–00	21 – 10
JN3–G6376–00	23 – 10
JU0–G6376–00	22 – 13
JN3–G6381–00	23 – 9
J0B–G6382–00	23 – 5
JW8–G6383–10	23 – 4
J0B–G638A–00	22 – 29
J0B–G638E–00	22 – 28
J0B–G6410–00	22 – 40
JN3–G6432–00	22 – 32
JW8–G6521–00	24 – 6
J0B–G6555–00	22 – 12
J0B–G6556–00	22 – 47
JW8–G7339–00	20 – 20
J0B–G8330–00	23 – 2
JN6–H1100–04	31 – 1
JN6–H1110–10	31 – 5
JF2–H1111–00	31 – 19
JN6–H1113–00	31 – 20
JN6–H1119–00	31 – 18
JW1–H1128–00	33 – 42
	33 – 44
J10–H1145–10	31 – 26
J10–H1157–10	31 – 2
J10–H1158–10	31 – 3
JN6–H1160–10	31 – 6
JN6–H1161–00	31 – 29
JN6–H1165–00	31 – 12
J10–H1166–10	31 – 13
JW1–H1170–11	32 – 4
JN6–H1171–11	32 – 10
JW1–H1173–02	32 – 12
JN3–H1661–00	31 – 28
JW9–H1674–00	30 – 1
JW1–H1950–00	33 – 12
J0B–H2115–00	33 – 5
J0B–H2116–01	33 – 6
J0B–H2117–00	33 – 7
JW1–H2133–00	33 – 1
J55–H2136–00	33 – 2
JN6–H2151–00	33 – 10
JU7–H2151–00	33 – 9
J0B–H2370–00	26 – 13

PART NO.	REF. NO.
JN6–H2377–00	27 – 30
JW1–H2386–10	33 – 46
JW1–H2386–10	33 – 36
JU2–H2510–20	33 – 49
JU2–H2511–00	33 – 38
JU6–H2569–00	33 – 39
5UG–H2579–00	33 – 37
J0B–H2590–01	33 – 8
JR1–H3383–02	33 – 20
JN6–H3386–01	33 – 21
JN6–H351C–10	33 – 41
	33 – 43
JW8–H3530–00	33 – 40
J0B–H5546–00	32 – 32
J0B–H591A–01	32 – 31
J0B–K7173–20	34 – 8
J0B–K7200–00	34 – 1
J0B–K7200–10	34 – 1
J0B–K7200–20	34 – 6
J0B–K7200–30	34 – 6
J0B–K7213–00	34 – 5
	34 – 18
J0B–K7217–00	34 – 15
J0B–K7218–00	34 – 14
J0B–K7219–00	34 – 16
J0B–K7237–00	34 – 3
	34 – 10
J0B–K7238–00	34 – 13
J0B–K7240–00	34 – 4
J0B–K7240–20	34 – 17
J0B–K7247–00	34 – 11
J0B–K7257–00	34 – 12
J0B–K7258–00	34 – 9
JW7–K7329–00	15 – 22
	27 – 17
	33 – 47
JW1–K7387–00	35 – 10
J0B–K7389–00	29 – 5
J0B–K7458–00	34 – 2
	34 – 7
J0B–K7510–00	25 – 1
JW8–K7540–00	25 – 7
JU0–K7573–00	26 – 3
JW1–K7741–00	27 – 28
JW8–K7762–00	14 – 38
JW8–K7762–11	14 – 38
JW8–K7762–21	14 – 38
J0B–K7768–00	26 – 8

PART NO.	REF. NO.
J0B–K7768–10	26 – 8
J0B–K7768–20	26 – 8
J0B–K8111–00	27 – 1
J0B–K8111–10	27 – 1
J0B–K8111–20	27 – 1
J0B–K8111–30	27 – 1
J0B–K8111–40	27 – 1
J0B–K8111–50	27 – 1
J0B–K8111–60	27 – 1
J0B–K8111–A0	27 – 1
J0B–K8111–B0	27 – 1
J0B–K8112–00	27 – 8
J0B–K8112–10	27 – 8
J0B–K8112–20	27 – 8
J0B–K8112–30	27 – 8
J0B–K8112–40	27 – 8
J0B–K8112–50	27 – 8
J0B–K8112–60	27 – 8
J0B–K8112–A0	27 – 8
J0B–K8112–B0	27 – 8
J0B–K8114–00	26 – 6
J0B–K8115–00	26 – 1
J0B–K8115–10	26 – 1
J0B–K8115–20	26 – 1
J0B–K8115–30	26 – 1
J0B–K8115–40	26 – 1
J0B–K8115–50	26 – 1
J0B–K8115–60	26 – 1
J0B–K8115–A0	26 – 1
J0B–K8115–B0	26 – 1
JR1–K8139–00	27 – 29
J0B–K8141–00	27 – 19
J0B–K8141–10	27 – 19
J0B–K8141–20	27 – 19
J0B–K8141–30	27 – 19
J0B–K8141–40	27 – 19
J0B–K8141–50	27 – 19
J0B–K8141–60	27 – 19
J0B–K8141–A0	27 – 19
J0B–K8141–B0	27 – 19
J0B–K814E–00	27 – 3
	27 – 10
J0B–K814F–00	27 – 4
	27 – 11
J0B–K814R–00	27 – 14
J0B–K814T–00	27 – 15
J0B–K814U–00	27 – 16
J0B–K8164–00	25 – 2

PART NO.	REF. NO.
J0B–K816M–00	12 – 15
J0B–K817H–00	27 – 32
J0B–K817H–10	27 – 32
J0B–K817J–00	27 – 33
J0B–K817J–10	27 – 33
J0B–K8187–00	28 – 13
J0B–K818A–00	28 – 2
J0B–K818B–00	28 – 5
J0B–K8191–00	28 – 8
J0B–K8192–00	28 – 10
J0B–K8197–01	28 – 12
J0B–K819H–00	27 – 13
JW1–K8214–00	35 – 12
J0B–K8233–00	26 – 14
J0B–K8237–01	27 – 21
J0B–K8243–00	26 – 17
J0B–K8244–00	26 – 19
J0B–K8251–00	27 – 6
J0B–K8252–00	12 – 18
J0B–K8253–00	15 – 23
J0B–K8254–00	11 – 36
J0B–K8255–01	27 – 24
J0B–K8256–00	12 – 21
J0B–K8257–00	12 – 22
J0B–K8258–00	12 – 23
J0B–K8259–00	12 – 25
J0B–K825A–00	12 – 26
J0B–K825E–00	12 – 27
J0D–K825G–00	27 – 7
J0B–K8271–00	28 – 1
J0B–K8273–00	26 – 16
J0B–K8282–00	26 – 9
JW1–K8297–02	27 – 31
JW1–K8297–11	27 – 31
J0B–K8312–00	35 – 3
JW1–K8313–01	35 – 5
JW1–K8314–10	35 – 11
JW1–K8314–20	35 – 11
J0B–K832F–00	26 – 21
J0B–K832F–10	26 – 21
J0B–K832G–00	26 – 22
J0B–K832G–10	26 – 22
JW1–K8340–00	29 – 3
JW1–K834G–00	29 – 9
JN6–K8355–20	29 – 8
JF2–K8356–00	29 – 7
JW8–K8357–00	14 – 32
JN6–K8358–01	14 – 33

PART NO.	REF. NO.
J0B–K835E–00	26 – 10
J0B–K8361–00	30 – 4
J0B–K8362–00	30 – 6
JN6–K8380–00	29 – 12
J0B–K8388–00	35 – 6
JU0–K8388–00	35 – 7
	35 – 13
JW1–K8388–00	35 – 4
JU0–K8398–00	35 – 9
	35 – 15
J0B–K8401–00	30 – 3
JW1–K8402–10	30 – 10
J0B–K8423–00	29 – 1
J0B–K8426–10	30 – 8
J0B–K8427–00	30 – 2
J0B–K84A0–00	35 – 1
J0B–K84A0–10	35 – 1
J0B–K84A2–00	35 – 2
JN9–W2536–00	18 – 2
	18 – 13
90105–06057	6 – 19
90105–06831	23 – 16
	26 – 4
	33 – 15
90105–06870	33 – 17
90105–08260	21 – 14
90105–082A0	18 – 23
90105–08867	12 – 5
	12 – 13
	12 – 19
	22 – 48
	33 – 29
90105–088B6	12 – 16
90105–10185	11 – 39
90105–10219	13 – 8
90105–10267	11 – 42
	13 – 13
	13 – 20
90105–10373	13 – 6
90105–10847	14 – 28
90109–08002	29 – 2
90109–08827	32 – 6
90110–06125	30 – 9
90111–05805	26 – 11
90113–04803	20 – 11
	20 – 14
90113–08803	22 – 14
90114–12004	24 – 2

PART NO.	REF. NO.
90114–12806	13 – 22
90119–06808	30 – 11
90119–06868	33 – 33
90159–06845	29 – 13
90170–05302	4 – 10
90170–10840	22 – 42
90176–06008	29 – 6
90179–05807	33 – 13
90179–08822	16 – 8
90179–08824	33 – 14
90179–12262	13 – 30
	24 – 4
90179–16889	31 – 30
90179–20016	24 – 3
90183–05008	26 – 12
90185–06836	29 – 11
90185–10012	11 – 40
90185–12008	14 – 7
90201–04810	14 – 35
90201–10057	2 – 5
	9 – 15
90201–10072	10 – 3
90201–121H8	18 – 11
	18 – 22
90201–121H9	18 – 10
	18 – 21
90201–18620	32 – 21
90201–198S7	23 – 12
90201–20035	24 – 8
90201–208H9	22 – 19
90201–208J0	22 – 21
90201–208S8	23 – 11
90208–14801	13 – 27
90209–08018	21 – 13
90249–14129	16 – 10
90269–06804	26 – 5
	28 – 4
	28 – 7
	28 – 9
	28 – 11
90269–07803	26 – 7
	26 – 18
	26 – 20
	27 – 5
	27 – 12
	27 – 20
90269–09003	12 – 8
	26 – 15

PART NO.	REF. NO.
90269–09003	28 – 3
	28 – 6
90269–10001	5 – 8
90280–04052	32 – 22
90340–12097	9 – 5
90381–17800	11 – 15
	11 – 27
	13 – 10
90381–18801	13 – 2
90386–08141	19 – 3
90386–12800	17 – 26
90387–046N7	14 – 37
90387–12016	13 – 15
90387–241M7	13 – 25
90450–54008	15 – 6
90461–14108	33 – 25
90462–05061	2 – 15
90464–09823	8 – 8
	33 – 26
90464–12836	33 – 48
90464–20005	33 – 27
90464–40825	15 – 17
	33 – 32
90464–48800	33 – 28
90464–76800	12 – 30
	28 – 14
90465–06038	23 – 18
90467–13847	2 – 19
90467–24140	6 – 22
90468–10049	6 – 8
	17 – 52
90468–20196	16 – 4
90480–20564	32 – 15
90501–10852	22 – 15
90501–264A9	4 – 5
90502–10013	14 – 36
90506–14001	18 – 7
	18 – 18
90506–20281	18 – 6
	18 – 17
90508–16460	17 – 53
90508–40678	19 – 4
90560–05001	17 – 54
90560–08251	15 – 9
91402–20012	23 – 8
91490–25015	16 – 13
91702–05010	6 – 7
91702–05014	17 – 51

PART NO.	REF. NO.
91702–06014	23 – 6
91702–08018	16 – 12
91702–08018	16 – 3
92012–06030	32 – 8
92017–06040	29 – 4
92902–06200	33 – 3
92902–06600	23 – 7
92902–08600	14 – 31
92902–10200	10 – 6
92902–12200	14 – 8
92907–06100	31 – 10
	31 – 17
9290N–06600	31 – 9
	31 – 16
	31 – 27
9299R–06200	29 – 14
93102–25868	22 – 17
93102–30083	13 – 26
93102–35014	9 – 3
	9 – 10
93104–11829	22 – 37
93106–38046	11 – 13
	11 – 25
93109–10820	22 – 34
93210–15414	32 – 29
93210–22344	9 – 17
93306–005Y3	13 – 24
93306–00622	11 – 11
	11 – 23
93306–006Y4	11 – 12
	11 – 24
93306–007Y0	22 – 39
93306–20201	9 – 4
	9 – 11
93306–204X0	13 – 23
93306–20714	9 – 9
93306–303Y6	22 – 4
93306–30709	9 – 2
93450–21053	3 – 5
93450–22119	24 – 11
93500–06826	22 – 16
93606–10842	22 – 22
94702–00343	2 – 8
94702–00348	2 – 8
95302–06600	19 – 2
	32 – 9
95302–06800	15 – 13
95302–08700	25 – 5

PART NO.	REF. NO.
95302–18600	32 – 20
95307–08700	16 – 9
9530N–06600	31 – 8
	31 – 15
95602–06200	19 – 6
95602–08100	23 – 1
95602–08710	2 – 17
95602–10200	10 – 7
	10 – 9
	11 – 34
	11 – 43
	13 – 7
	25 – 8
95602–12200	11 – 18
	11 – 30
	14 – 9
95602–14100	13 – 28
95612–12100	13 – 18
95622–08618	2 – 7
95702–06500	33 – 4
95702–08500	6 – 2
	8 – 6
	11 – 20
	11 – 32
	32 – 7
95802–06016	6 – 6
95802–06020	5 – 2
	5 – 6
95812–06025	7 – 10
95812–08016	25 – 3
95812–08020	14 – 2
	17 – 49
95812–08040	12 – 3
95812–08045	9 – 13
95812–08050	25 – 4
95812–08060	11 – 19
	11 – 31
95812–10020	10 – 2
	22 – 1
95812–10055	11 – 33
95812–12030	32 – 3
95812–12055	11 – 17
	11 – 29
95812–12080	13 – 17
95822–06012	25 – 6
	32 – 26
	33 – 35
95822–06016	32 – 16

PART NO.	REF. NO.
95822–06016	32 – 19
95822–06030	2 – 14
95822–08020	8 – 5
	32 – 5
	32 – 11
95822–10020	11 – 2
97012–08030	14 – 30
97012–10050	9 – 14
97012–10070	2 – 4
9708R–06020	29 – 10
97602–04316	23 – 14
97602–05225	33 – 19
97702–40525	14 – 34
97702–50016	6 – 20
97702–60416	6 – 17
98502–06014	7 – 4
9850N–04010	31 – 23
9850N–05016	31 – 22
9850N–05018	31 – 31
99001–07600	6 – 9
99001–09600	16 – 11
99009–19400	23 – 13
99530–08016	9 – 7
99530–14016	2 – 6

PART NO.	REF. NO.