YAMAHA

PARTS CATALOGUE

DR2A17 (J0A1) CANADA, EUROPE, OTHERS

YAMAHA GENUINE Parts & Accessories

NEWS No.	DATE	COMMENT
PE0-GC-170009	Dec.,28,2017	COR:FIG.15/21/23/35/36/37 LIST&ILLUSTRATION CORRECTION
PE0-GC-190002	May,23,2019	MOD: FIG.22/23 TRANSAXLE LIST REVISION

1SJ0A-100E1

( )

2019/05/23

DR2A17
PARTS CATALOGUE
©2016 by Yamaha Motor Co., Ltd.
1st edition, September 2016
All rights reserved.
Any reprinting or unauthorized use
without the written permission of
Yamaha Motor Co., Ltd.
is expressly prohibited.
Printed in Japan.

FOREWORD

This Parts Catalogue is related to the parts for the model(s) on the cover page. When you are ordering replacement parts, please refer to this Parts Catalogue and quote both part numbers and part names correctly.

1. Modifications or additions which have been made after the issue of the Parts Catalogue will be announced in the Parts News.
   It is advisable that you make the necessary corrections to the Parts Catalogue according to the Parts News.

2. Abbreviations
   The following abbreviations are used in this Parts Catalogue.

   "UR" Use specified parts number.

   "UN" Use as many as needed.

   "AP" Alternate Parts

   "LM" Locally Made (Parts need to be ordered locally)

   "F#" Frame No. (Applicable machine No.)

   "O/S" Over Size

3. The number of components for assembly
   - Parts, which are to be supplied in an assembly, are listed with a dot (.) in front of the part name as shown below.
   - The numeral appearing to the right of each component part indicates the quantity of parts for each assembly unit.

PART NO.	DESCRIPTION	Q'TY	REMARKS
2F5–83310–60	FRONT FLASHER LIGHT ASSY	2	
115–83311–60	.BULB (6V–18W)	1	

4. Applicable colours of graphics are represented in the "REMARKS" as shown below.

PART NO.	DESCRIPTION	Q'TY	REMARKS
2N4–24110–00–X5	FUEL TANK COMP.	2	MXR
3J1–24240–10	.GRAPHIC, FUEL TANK	1	FOR MXR

5. Note that the illustrations for reference in finding parts numbers are not to be used for assembling. When assembling, please use the applicable service manual.

6. The asterisk (*) before a reference number indicates modified items after the first edition.

7. Applicable Serial No.

Engine Serial No.

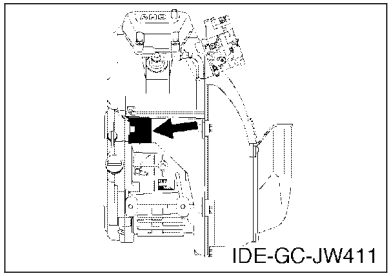

Frame Serial No.

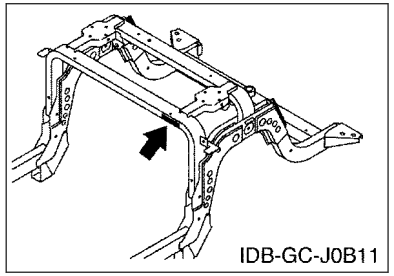

8. Applicable Colour Code (The (*) mark shows Model colour.)

Abbreviation	Colour Name	Colour Code
BW1(*)	BLUISH WHITE 1	1571
DNBME(*)	DARK GRAYISH BLUE METALLIC E	0866
DNMC(*)	DARK GRAY METALLIC C	0922
DYNM2(*)	DARK YELLOWISH GRAY METALLIC 2	1509
HTR(*)	HEAT RED	00EY
LNMP(*)	LIGHT GRAY METALLIC P	0925
LNYM8(*)	LIGHT GRAYISH YELLOW ME 8	1047
NYS4(*)	GRAYISH YELLOW SOLID 4	1459
VDGS1(*)	VERY DARK GREEN SOLID 1	0614

9. Quantity Column Information

Column No.	Name Of Q'ty Column	Destination
1	J0A1	CANADA, EUROPE, OTHERS

10. Applicable Starting Serial No.

Frame Serial No.

Serial No.	Name Of Q'ty Column	Model Code
J0A-000101	J0A1	J0A1

CONTENTS

ENGINE 1 1

ENGINE

CYLINDER HEAD 2
CRANKSHAFT & PISTON 3
CAMSHAFT & VALVE 4
AIR SHROUD & FAN 5
INTAKE 6
CARBURETOR 7
EXHAUST 8
CRANKCASE 9

BODY

ENGINE BRACKET 10
REAR ARM & SUSPENSION 11
FRAME 12
FRONT SUSPENSION 13
STEERING 15
FUEL TANK 1 17
FUEL TANK 2 18
PEDAL WIRE 19
PEDAL ASSEMBLY 20
BRAKE 23
GOVERNOR 24

DRIVE

PRIMARY SHEAVE 25
SECONDARY SHEAVE 26
TRANSAXLE 27
SHIFTER & CABLES 30
WHEEL 31
BUMPER 32
BODY 33
BODY 2 35
BODY FITTING 37
CARRIER 38
SEAT 39

ELECTRICAL

STARTING MOTOR 40
ELECTRICAL 1 42
ELECTRICAL 2 43
ALTERNATE FOR WINDSHIELD 45
ALTERNATE FOR SUN ROOF 46

INDEX

NUMERICAL INDEX 47

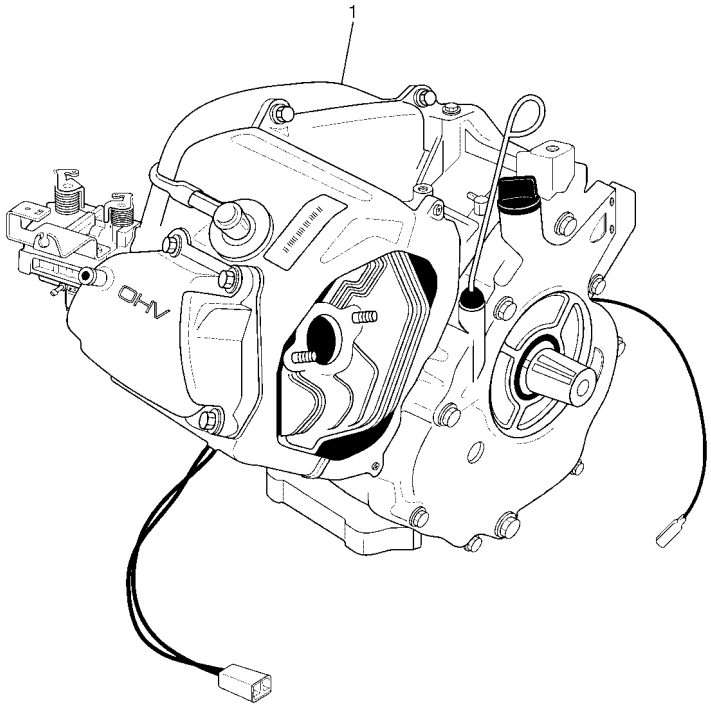

JW41110-C010

FIG. 1 ENGINE 1

REF. NO.	PART NO.	DESCRIPTION	J0A1					REMARKS
1	JR6–19001–00	ENGINE ASSEMBLY	1					

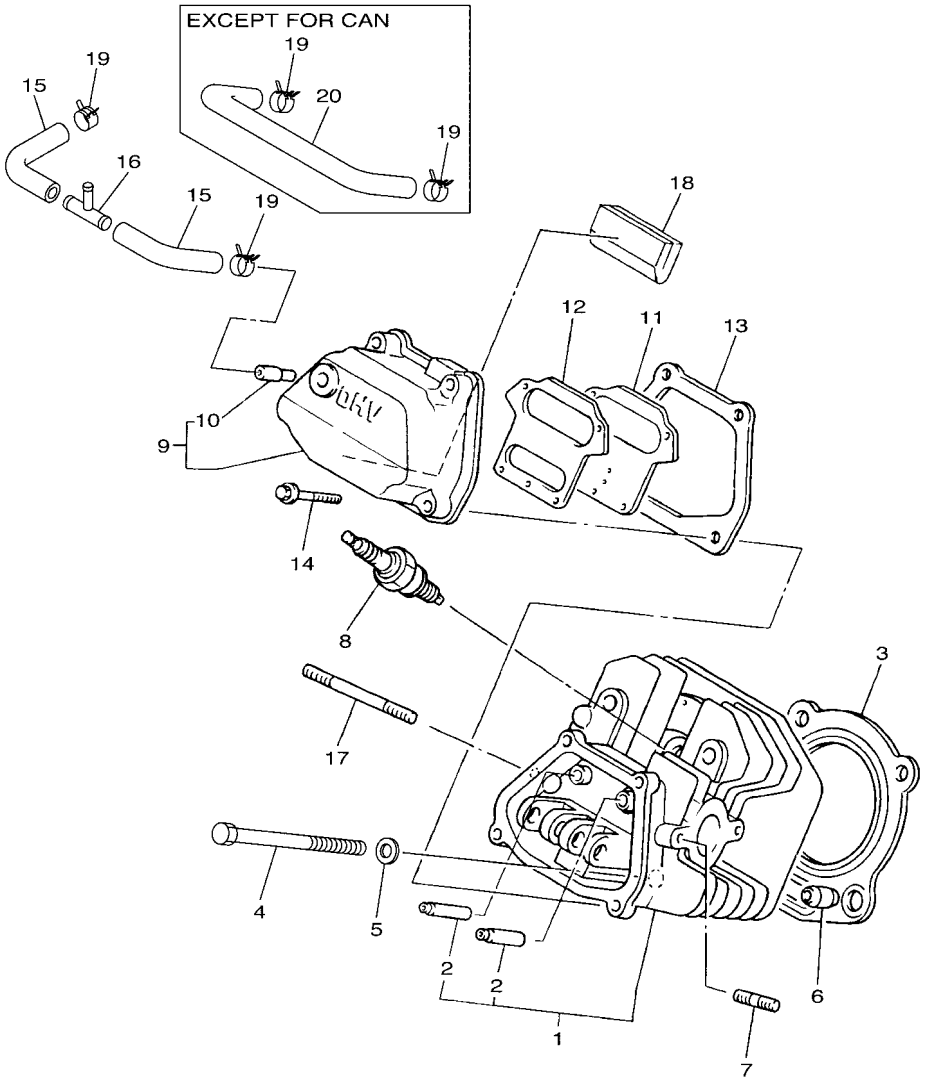

J0A1110-S020

FIG. 2 CYLINDER HEAD

REF. NO.	PART NO.	DESCRIPTION	J0A1					REMARKS
1	JT0–11111–00	HEAD, CYLINDER 1	1					
2	JN6–11133–10	.GUIDE, VALVE 1	2					
3	JT0–11181–00	GASKET, CYLINDER HEAD 1	1					
4	97012–10070	BOLT	4					
5	90201–10057	WASHER, PLATE	4					
6	99530–14016	PIN, DOWEL	2					
7	95622–08618	BOLT, STUD	2					
8	94702–00348	PLUG, SPARK (NGK-BPR2ES)	1					STD
	94702–00343	PLUG, SPARK (NGK BP4ES)	1					AP
9	JN6–11191–01	COVER, CYLINDER HEAD 1	1					
10	JN6–11116–00	.JOINT, BREATHER	1					
11	JN6–11168–00	COVER, BREATHER	1					
12	JN6–11169–00	GASKET, BREATHER COVER	1					
13	JN6–11193–00	GASKET, HEAD COVER 1	1					
14	95822–06030	BOLT, FLANGE	4					
15	JW1–E1166–00	PIPE, BREATHER 1	2					FOR CAN
16	JW1–E1116–00	JOINT, BREATHER	1					FOR CAN
17	95602–08710	BOLT, STUD	2					
18	JR7–11163–10	ELEMENT	1					
19	90467–13847	CLIP	2					
20	JN6–E1166–00	PIPE, BREATHER 1	1					EXCEPT FOR CAN

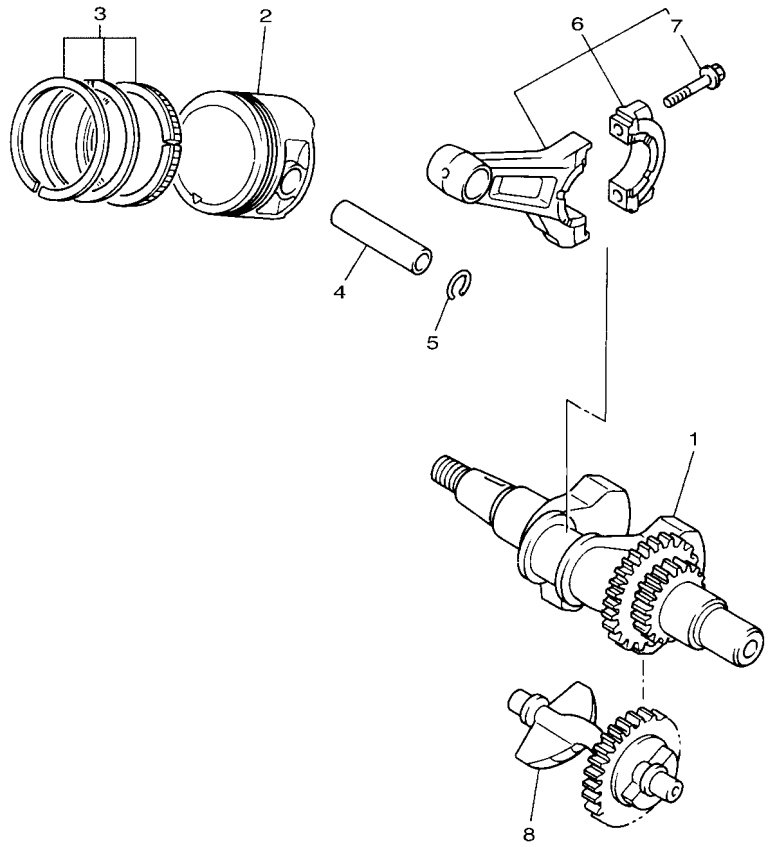

JN7010-6021

FIG. 3 CRANKSHAFT & PISTON

REF. NO.	PART NO.	DESCRIPTION	J0A1					REMARKS
1	JN6–11400–00	CRANKSHAFT ASSY	1					
2	JR7–11631–00–A0	PISTON (STD)	1					
	JR7–11635–00	PISTON (0.25MM O/S)	1					AP
	JR7–11636–00	PISTON (0.50MM O/S)	1					AP
3	JR7–11610–00	PISTON RING SET (STD)	1					
	JR7–11610–10	PISTON RING SET (0.25MM O/S)	1					AP
	JR7–11610–20	PISTON RING SET (0.50MM O/S)	1					AP
4	583–11633–00	PIN, PISTON	1					
5	93450–21053	CIRCLIP	2					
6	JN6–11650–10	CONNECTING ROD ASSY	1					
7	JN6–11654–10	.BOLT, CONNECTING ROD	2					
8	JN6–11454–10	WEIGHT 1	1					

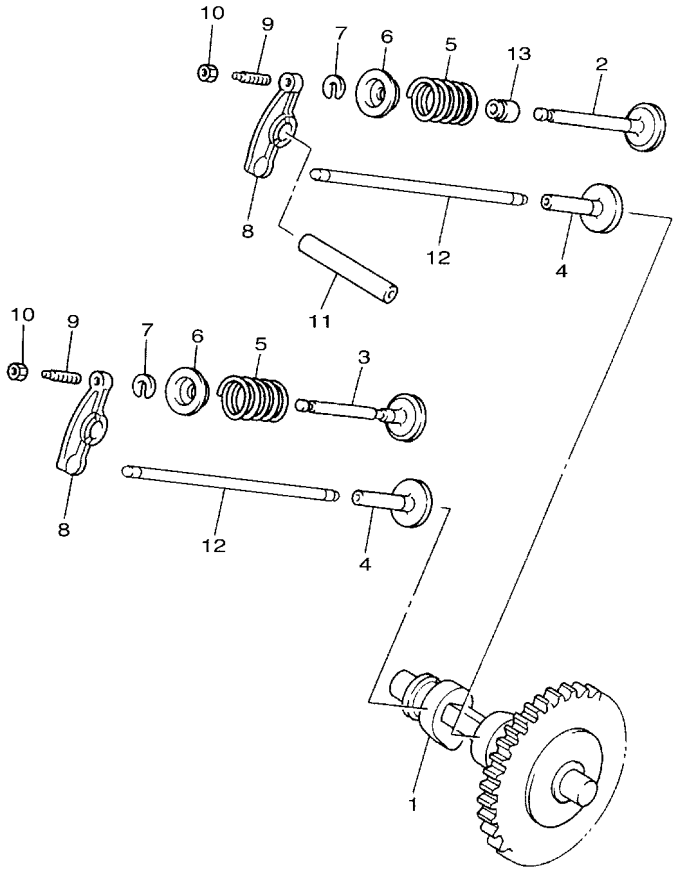

JD13110-K030

FIG. 4 CAMSHAFT & VALVE

REF. NO.	PART NO.	DESCRIPTION	J0A1					REMARKS
1	JR7–12170–00	CAMSHAFT ASSY 1	1					
2	JN6–12111–10	VALVE, INTAKE	1					
3	7RH–12121–10	VALVE, EXHAUST	1					
4	JN6–12153–10	LIFTER, VALVE	2					
5	90501–264A9	SPRING, COMPRESSION	2					
6	J38–12117–01	RETAINER, VALVE SPRING	2					
7	J38–12118–00	LOCK, VALVE SPRING RETAINER	2					
8	JN6–12151–10	ARM, VALVE ROCKER	2					
9	22F–12159–10	SCREW, VALVE ADJUSTING	2					
10	90170–05302	NUT	2					
11	J38–12156–20	SHAFT, ROCKER 2	1					
12	JR7–12154–10	ROD, VALVE PUSH	2					
13	4G0–12119–00	SEAL, VALVE STEM	1					

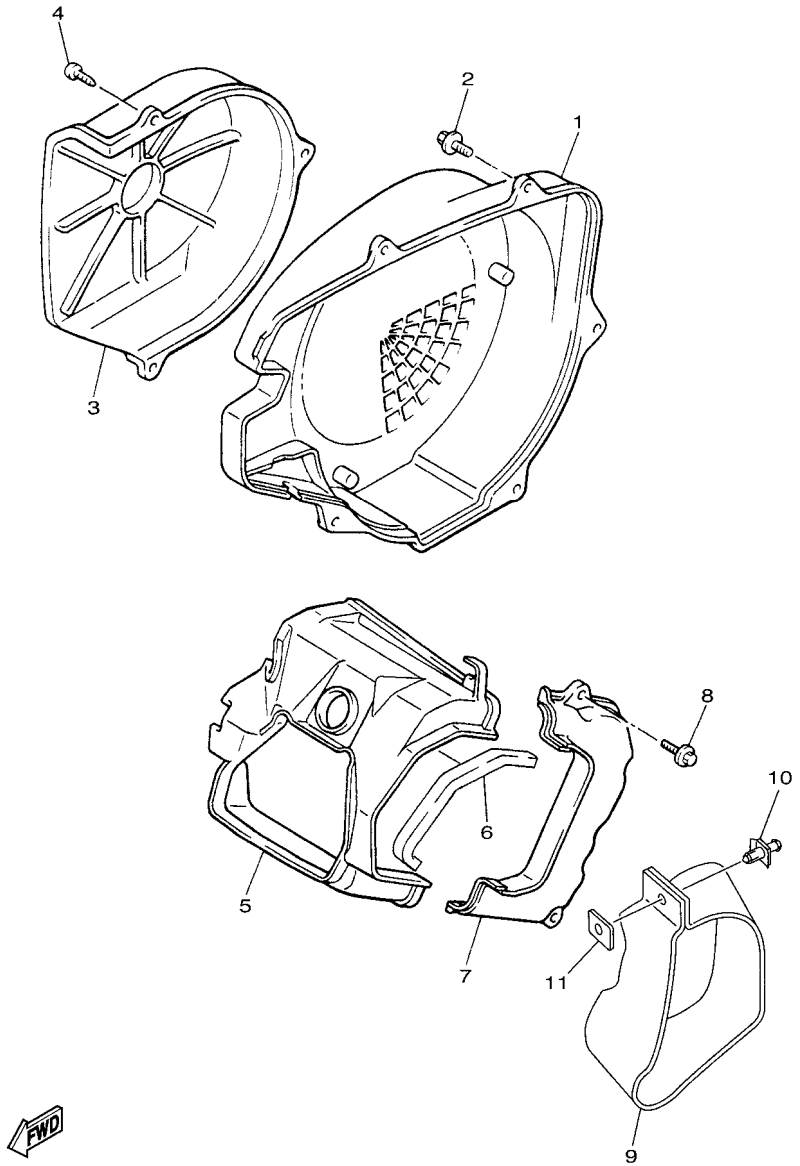

JC23100-P050

FIG. 5 AIR SHROUD & FAN

REF. NO.	PART NO.	DESCRIPTION	J0A1					REMARKS
1	JN6–12621–02	CASE, FAN	1					
2	95817–06020	BOLT, FLANGE	4					
3	JN6–12616–00	COVER, FAN CASE	1					
4	97702–60420	SCREW, TAPPING	3					
5	JN6–12651–01	AIR SHROUD, CYLINDER 1	1					
6	JR7–12658–00	DAMPER, AIR SHROUD 1	1					
7	JN6–12652–00	AIR SHROUD, CYLINDER 2	1					
8	95802–06020	BOLT, FLANGE	2					
9	JX4–12691–00	DUCT 1	1					
10	90269–10001	RIVET	1					
11	JR7–12634–00	PLATE 2	1					

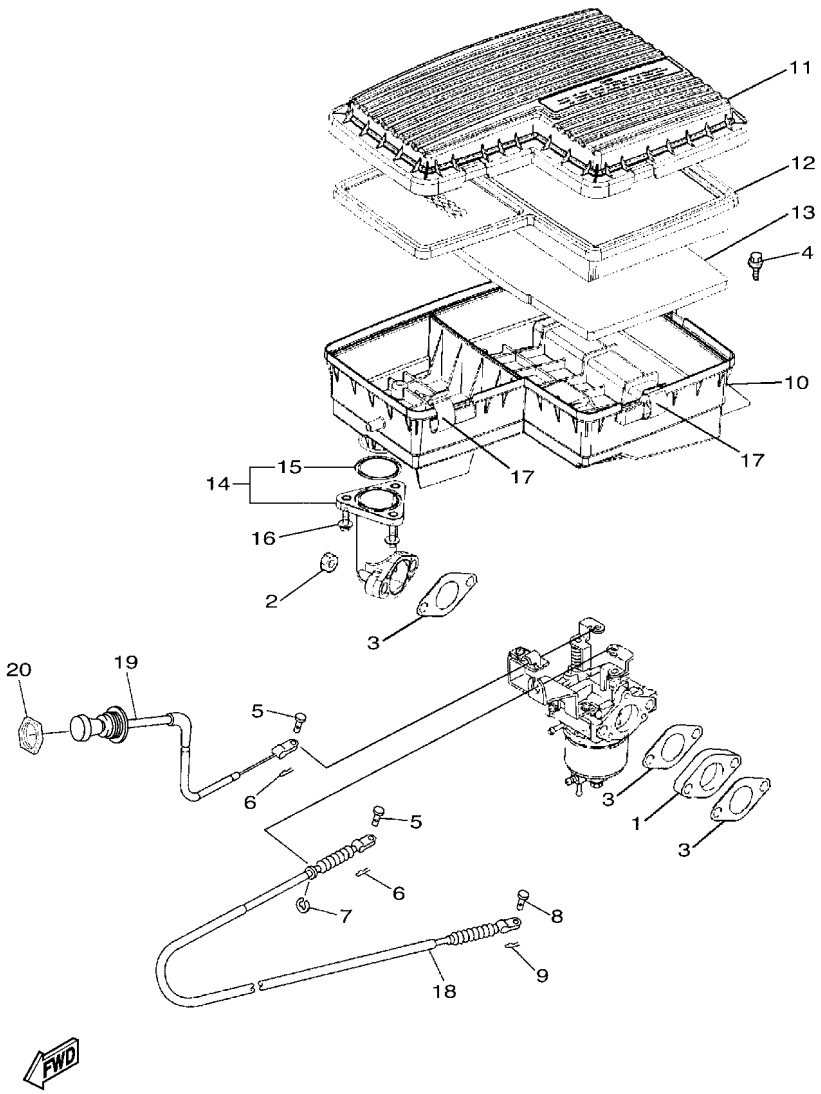

JW86100-P060

FIG. 6 INTAKE

REF. NO.	PART NO.	DESCRIPTION	J0A1					REMARKS
1	JN6–13595–00	JOINT	1					
2	95702–08500	NUT, FLANGE	2					
3	JN6–13567–00	GASKET	3					
4	90119–06884	BOLT, WITH WASHER	2					
5	91702–05010	PIN, CLEVIS	2					
6	90468–10049	CLIP	2					
7	99001–07600	CIRCLIP	1					
8	91702–05010	PIN, CLEVIS	1					
9	90468–10049	CLIP	1					
10	JU0–E4411–00	CASE, AIR CLEANER 1	1					
11	JU0–E4412–00	CAP, CLEANER CASE 1	1					
12	JU0–E4450–00	ELEMENT ASSY, AIR CLEANER	1					
13	JU0–E445E–00	FILTER 1	1					
14	JU0–E3505–09	JOINT COMP.	1					
15	93210–398D6	.O-RING	1					
16	90105–06862	BOLT, FLANGE	3					
17	5UH–E4424–00	CLIP, CAP FITTING	5					
18	JW8–F6312–21	CABLE, THROTTLE 2	1					
19	JW1–F6331–01	CABLE, STARTER 1	1					
20	JU0–F6333–00	NUT	1					

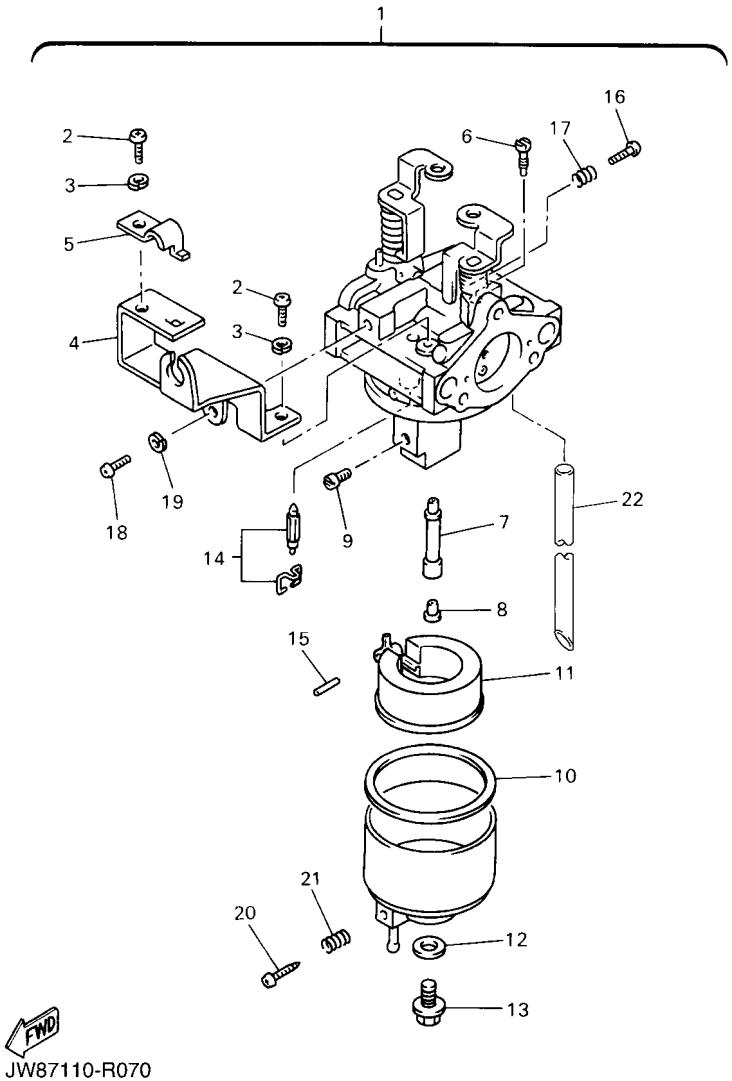

FIG. 7 CARBURETOR

REF. NO.	PART NO.	DESCRIPTION	J0A1					REMARKS
1	JR6–14101–02	CARBURETOR ASSY 1	1					
2	98507–05008	.SCREW, PAN HEAD	2					
3	92990–05100	.WASHER, SPRING	2					
4	JN6–14291–00	.BRACKET 1	1					
5	J10–14227–00	.PLATE	1					
6	732–14142–65–A0	.JET, PILOT (# 65)	1					
7	JN6–1495H–3B	.NOZZLE, MAIN	1					
8	73A–1414G–00	.PIPE, MAIN BLEED	1					
9	3G2–1423A–68–A0	.JET, MAIN (# 87.5)	1					STD
	3G2–1423A–67	.JET, MAIN (# 82.5)	1					AP
	3G2–1423E–33–A0	.JET, MAIN (#83.8)	1					AP
10	7CT–E4997–00	.SEAL	1					
11	JN6–14185–00	.FLOAT	1					
12	127–14198–00	.GASKET	1					
13	7R1–14162–00	.BOLT, HOLDING	1					
14	JN5–14150–00	.NEEDLE ASSY (WITH CLIP)	1					
15	22F–14186–00	.PIN, FLOAT	1					
16	1WG–14922–00	.SCREW, THROTTLE	1					
17	73A–14212–10	.SPRING	1					
18	98507–04010	.SCREW, PAN HEAD	1					
19	92902–04100	.WASHER, SPRING	1					
20	7E1–14191–00	.PLUG, DRAIN	1					
21	73A–14212–00	.SPRING	1					
22	1KT–14197–01	.PIPE	1					

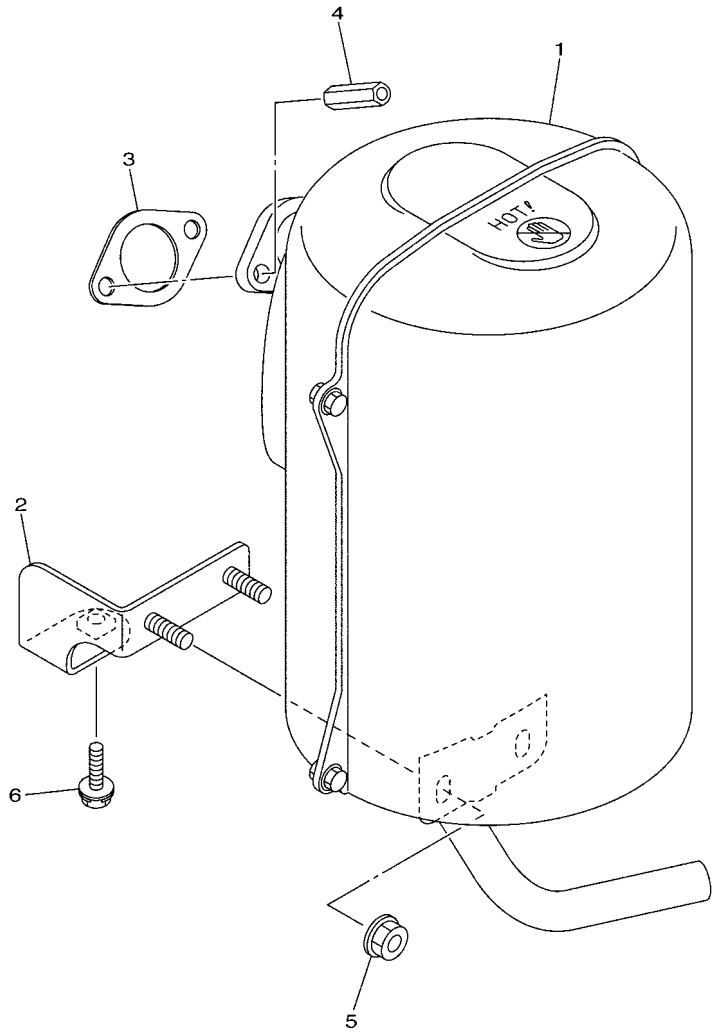

J0A1110-S080

FIG. 8 EXHAUST

REF. NO.	PART NO.	DESCRIPTION	J0A1					REMARKS
1	JW8–E4710–01	MUFFLER ASSY 1	1					
2	JW8–F1436–00	BRKT., MUFF. 2	1					
3	7KY–14613–01	GASKET, EXHAUST 1	1					
4	JW1–E4713–00	NUT, MUFFLER JOINT	2					
5	95602–08200	NUT, U FLANGE	2					
6	97502–08625	BOLT, WITH WASHER	1					

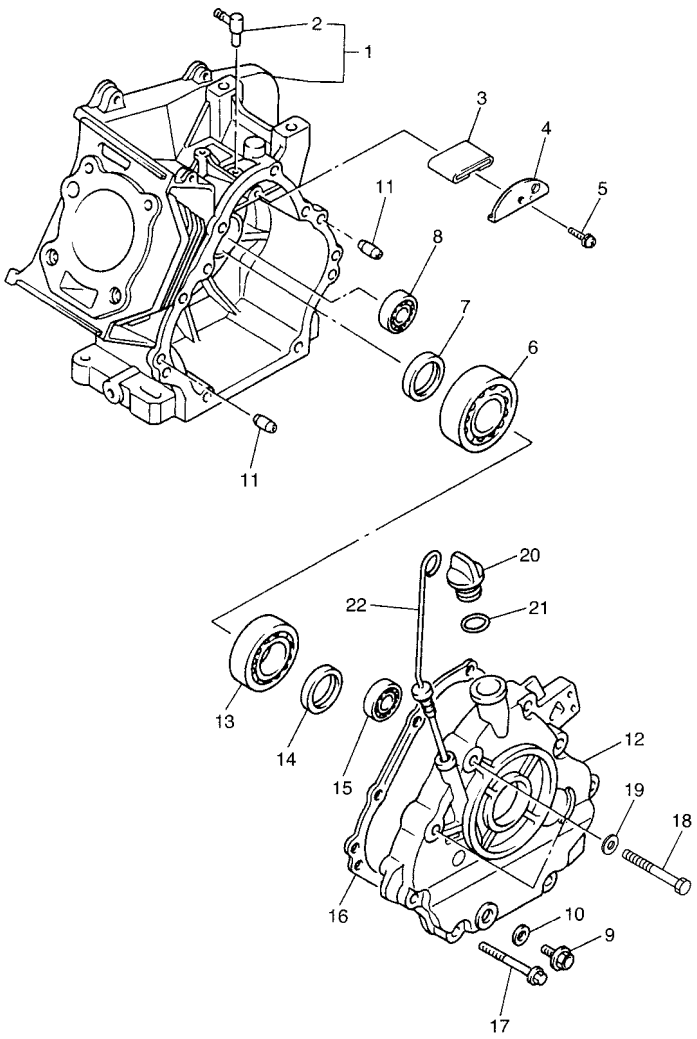

JW61100-H090

FIG. 9 CRANKCASE

REF. NO.	PART NO.	DESCRIPTION	J0A1					REMARKS
1	JR7–15100–03	CRANKCASE ASSY	1					
2	JN6–15155–10	.NOZZLE 3	1					
3	JW1–E5407–00	ELEMENT 1	1					
4	JR7–15123–00	PLATE, BAFFLE 1	1					
5	90159–06107	SCREW, WITH WASHER	1					
6	93306–30709	BEARING	1					
7	93102–35014	OIL SEAL	1					
8	93306–20201	BEARING	1					
9	90340–12097	PLUG, STRAIGHT SCREW	1					
10	812–11198–00	GASKET	1					
11	99530–08016	PIN, DOWEL	2					
12	JN6–15411–01	COVER, CRANKCASE 1	1					
13	93306–20714	BEARING	1					
14	93102–35014	OIL SEAL	1					
15	93306–20201	BEARING	1					
16	JY2–15451–00	GASKET, CRANKCASE COVER 1	1					
17	95812–08045	BOLT, FLANGE	6					
18	97012–10050	BOLT	2					
19	90201–10057	WASHER, PLATE	2					
20	796–15363–01	PLUG, OIL	1					
21	93210–22344	O-RING	1					
22	J38–15361–00	GAUGE, LEVEL	1					

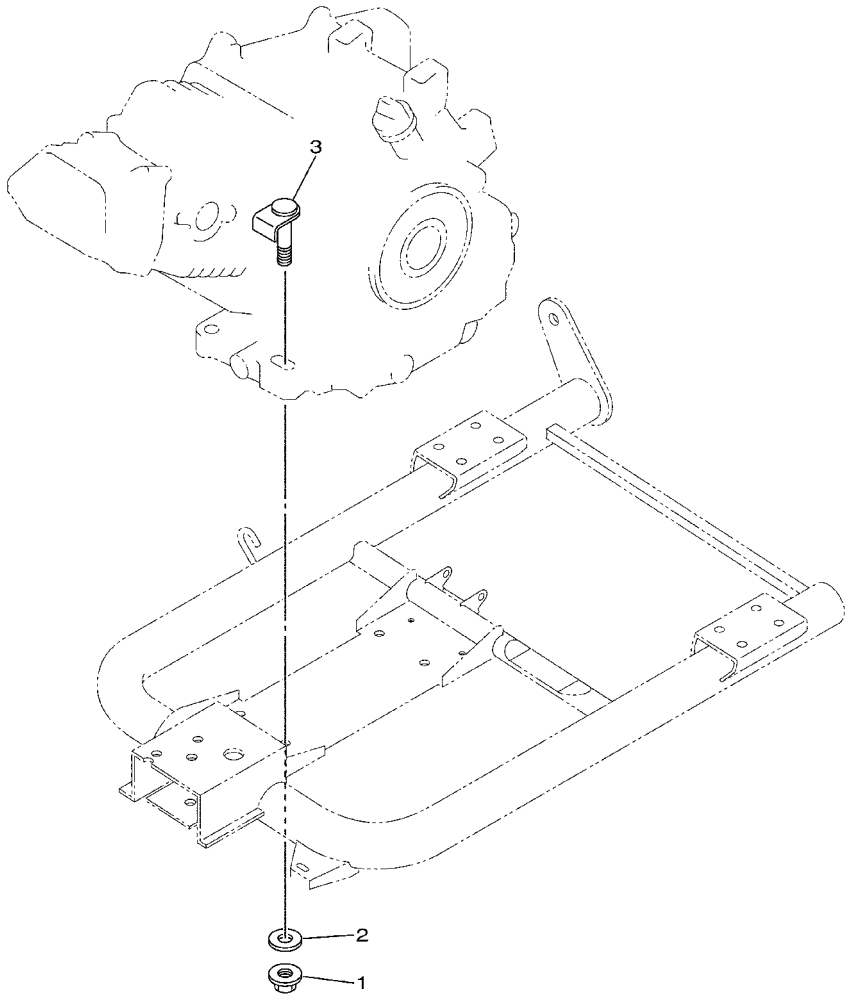

J0A1110-S100

FIG. 10 ENGINE BRACKET

REF. NO.	PART NO.	DESCRIPTION	J0A1					REMARKS
1	95602–10200	NUT, S/L FLANGE	4					
2	92902–10200	WASHER	4					
3	JT0–21481–00	BOLT, ENGINE MOUNTING 1	4					

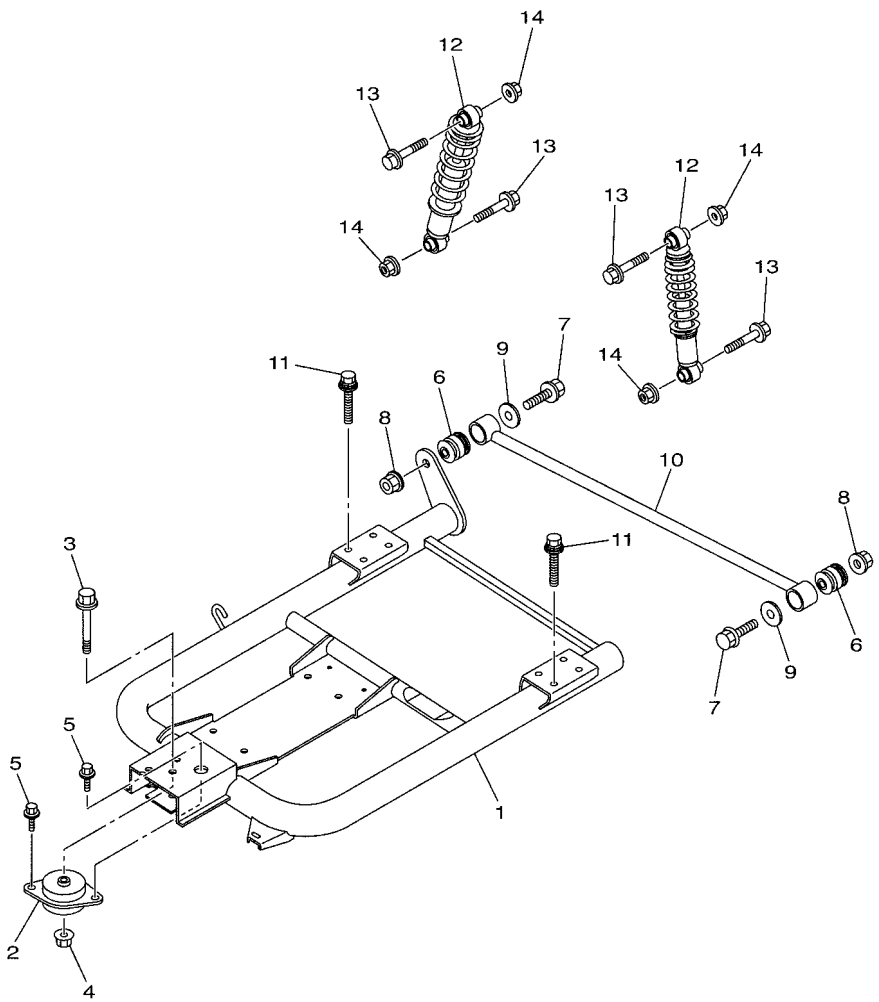

J0A1110-S110

FIG. 11 REAR ARM & SUSPENSION

REF. NO.	PART NO.	DESCRIPTION	J0A1					REMARKS
1	J0A–F2110–00	REAR ARM COMP.	1					
2	JN6–F2123–10	BUSH 1	1					
3	90105–13800	BOLT, FLANGE	1					
4	90179–13800	NUT	1					
5	90119–10044	BOLT, WITH WASHER	2					
6	JN6–F2124–10	BUSH 2	2					
7	95812–12065	BOLT, FLANGE	2					
8	95602–12200	NUT, SELF-LOCKING	2					
9	90201–128S4	WASHER, PLATE	2					
10	JW1–F217G–10	ROD, CONNECTING 2	1					
11	97512–10620	BOLT, WITH WASHER	8					
12	J0A–F2210–00	SHOCK ABSORBER ASSY, REAR	2					
13	95812–10055	BOLT, FLANGE	4					
14	95602–10200	NUT, S/L FLANGE	4					

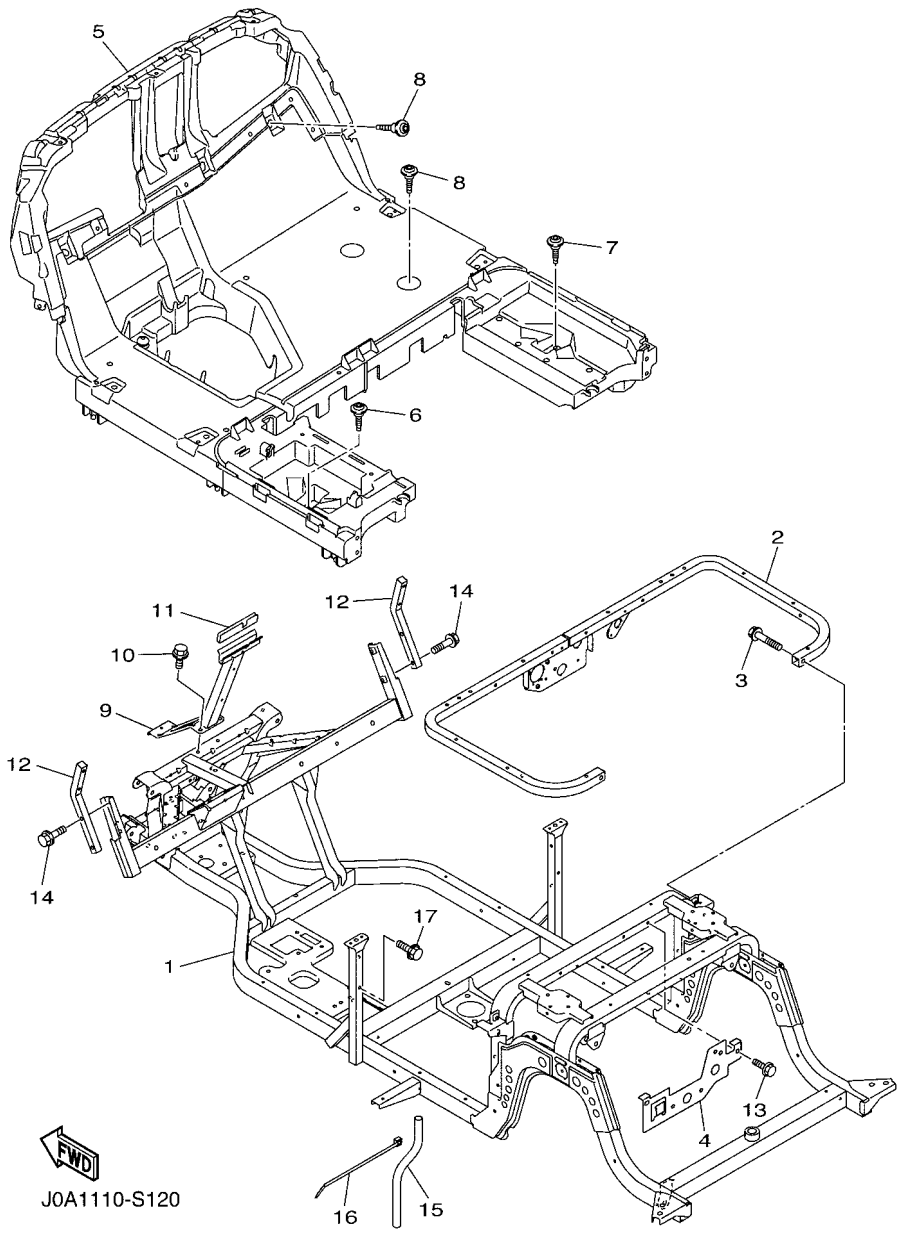

FIG. 12 FRAME

REF. NO.	PART NO.	DESCRIPTION	J0A1					REMARKS
1	J0A–F2501–00	FRAME COMP.	1					
2	J0B–F255G–00	MEMBER, SEAT SUPPORT	1					
3	95812–08040	BOLT, FLANGE	2					
4	JW8–F253B–00	STAY, RELAY	1					
5	J0A–F7411–00	FOOTREST 1	1					
6	J0B–F1738–00	BOLT	1					
7	J0B–F1738–00	BOLT	1					
8	J0B–F1738–00	BOLT	7					
9	J0B–F258E–00	SUPPORT, FRONT COWL	1					
10	90105–08867	BOLT, FLANGE	2					
11	J0B–F2127–00	SHIM	1					
12	J0B–K816M–00	REAR STORAGE BOX COMP.	2					
13	90105–06831	BOLT, FLANGE	2					
14	90105–088B6	BOLT, FLANGE	4					
15	J0B–F125J–00	PIPE, DRAIN	2					
16	90464–76800	CLAMP	2					
17	90105–08867	BOLT, FLANGE	1					

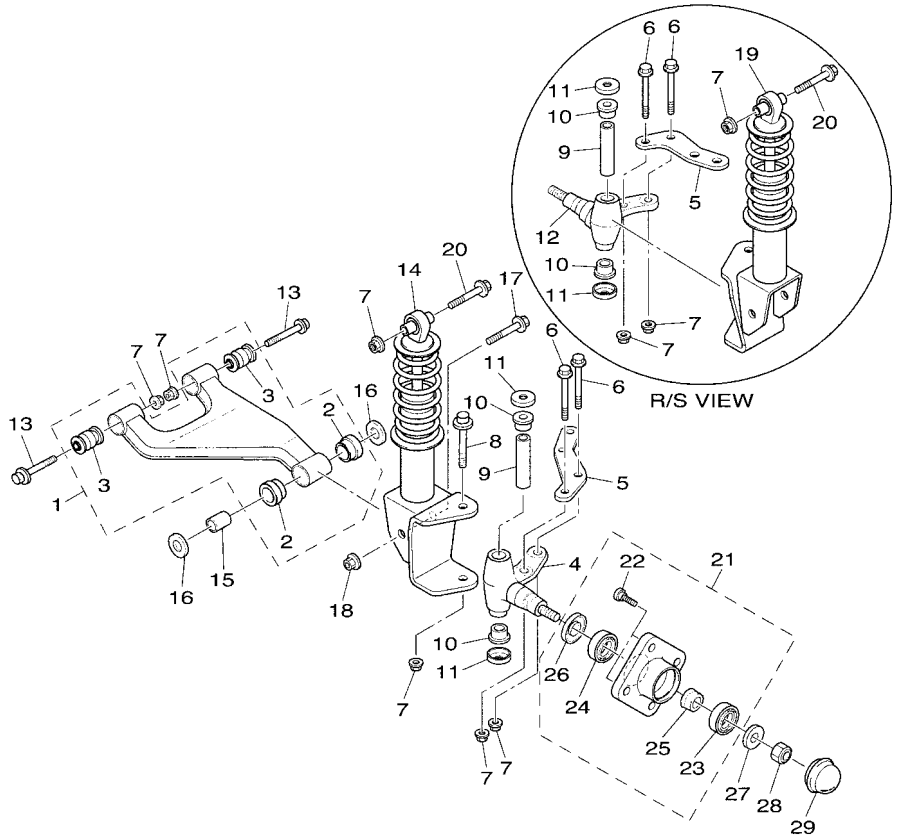

J0A1110-S130

FIG. 13 FRONT SUSPENSION

REF. NO.	PART NO.	DESCRIPTION	J0A1					REMARKS
1	J0B–F3570–10	FRONT LOWER ARM COMP. (LEFT)	2					
2	90381–18801	.BUSH, SOLID	2					
3	2HR–23526–00	.BUSH	2					
4	JU0–F3511–10	KNUCKLE, STEERING 1	1					
5	JW1–F3512–00	ARM, KNUCKLE 1	2					
6	90105–10373	BOLT, FLANGE	4					
7	95602–10200	NUT, S/L FLANGE	12					
8	90105–10219	BOLT, FLANGE	2					
9	2NL–23448–00	SPACER	2					
10	90381–17800	BUSH, SOLID	4					
11	2NL–23517–00	COVER, THRUST 1	4					
12	JU0–F3521–10	KNUCKLE, STEERING 2	1					
13	90105–10267	BOLT, FLANGE	4					
14	J0A–F3350–00	SHOCK ABSORBER ASSY	1					
15	90387–12016	COLLAR	2					
16	401–22128–01	COVER, THRUST 1	4					
17	95812–12080	BOLT, FLANGE	2					
18	95612–12100	NUT, U	2					
19	J0A–F3390–00	SHOCK ABSORBER ASSY 2	1					
20	90105–10267	BOLT, FLANGE	2					
21	JW8–F5103–00	HUB BEARING UNIT ASSY	2					
22	90114–12806	.BOLT, SERRATION	4					
23	93306–204X0	.BEARING	1					
24	93306–005Y3	.BEARING	1					
25	90387–241M7	.COLLAR	1					
26	93102–30083	.OIL SEAL	1					
27	90208–14801	WASHER, CONICAL SPRING	2					

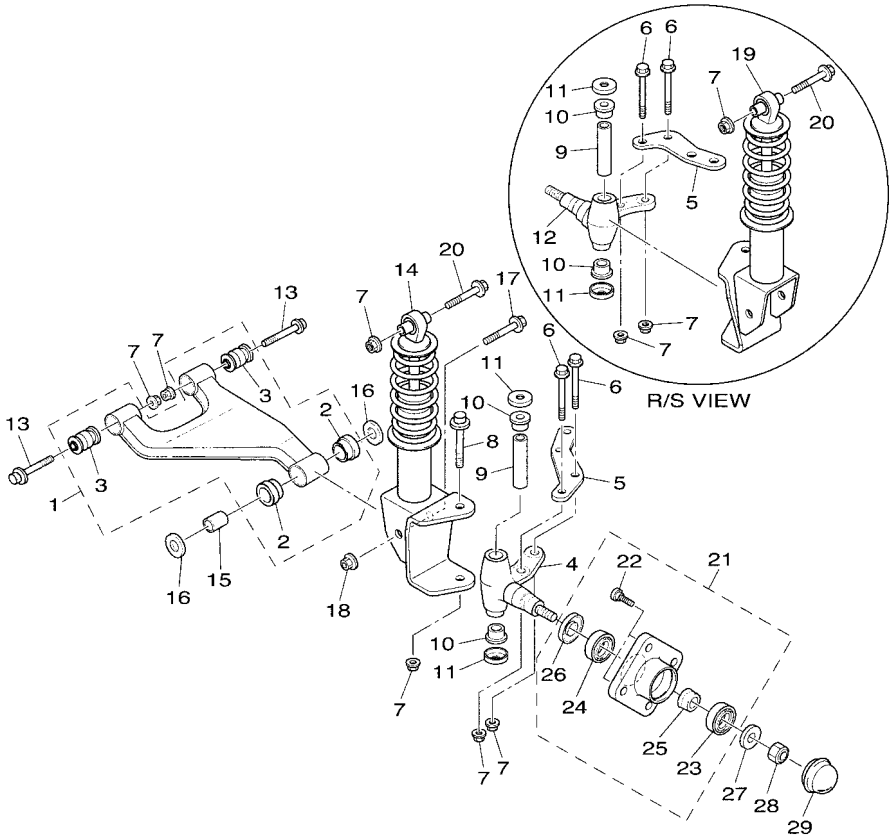

J0A1110-S130

FIG. 13 FRONT SUSPENSION

REF. NO.	PART NO.	DESCRIPTION	J0A1					REMARKS
28	95602–14100	NUT, U	2					
29	JN6–F5118–01	COVER, HUB DUST	2					

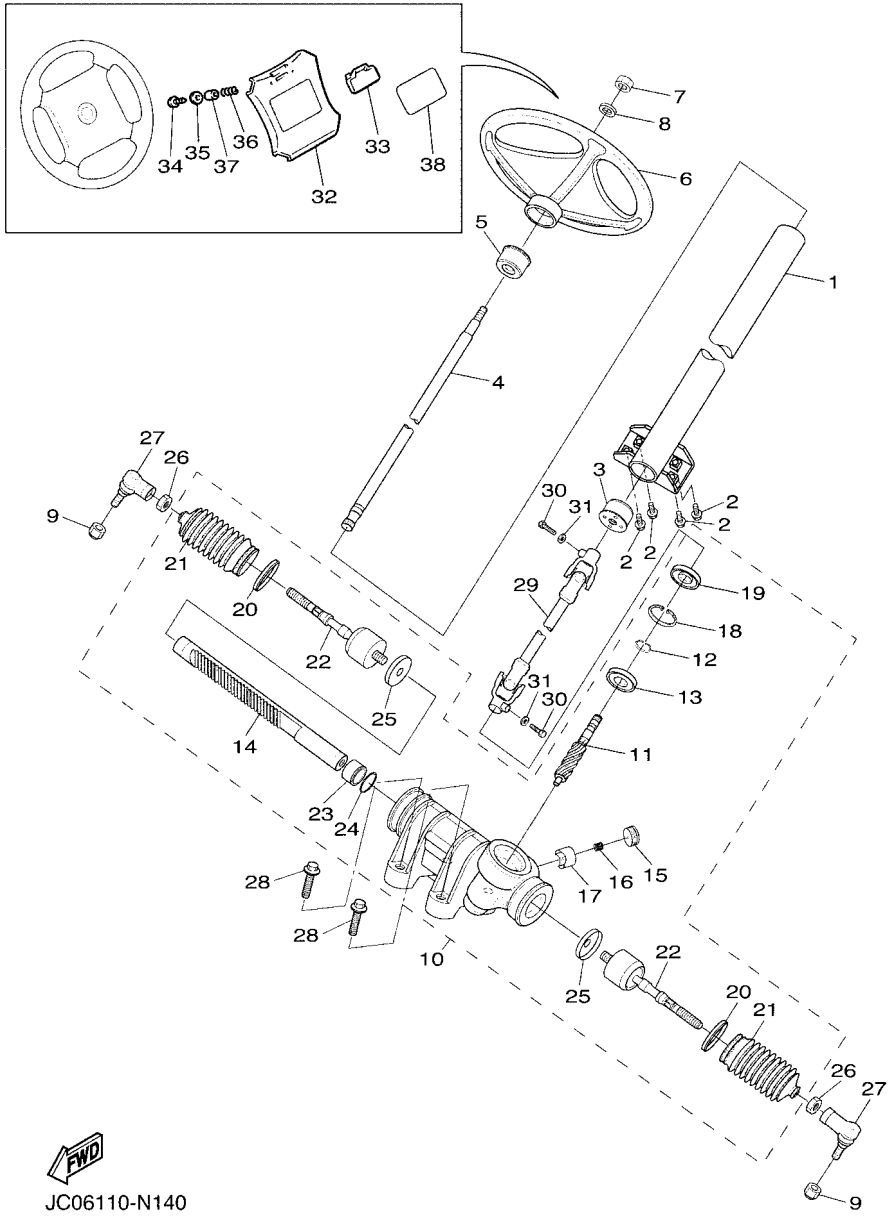

FIG. 14 STEERING

REF. NO.	PART NO.	DESCRIPTION	J0A1					REMARKS
1	JW1–F3811–03	COLUMN, STEERING	1					
2	95812–08020	BOLT, FLANGE	4					
3	JU0–F3857–11	HOLDER	1					
4	JU0–F3828–10	ROD, STEERING	1					
5	JU0–F3857–11	HOLDER	1					
6	JN3–F3838–00	WHEEL, STEERING	1					
7	90185–12008	NUT, SELF-LOCKING	1					
8	92902–12200	WASHER	1					
9	95602–12200	NUT, SELF-LOCKING	2					
10	JW1–F3400–00	STEERING ASSY	1					
11	JW1–F387A–00	.GEAR,PINION	1					
12	JW1–F3183–00	.CIRCLIP	1					
13	JW1–F3812–00	.BEARING, STEERING	1					
14	JW1–F387E–00	.GEAR, RACK	1					
15	5UG–F387G–00	.COVER, ADJUST	1					
16	5UG–F387K–00	.SPRING, PRESSURE	1					
17	5UG–F387F–00	.PAD, PRESSURE	1					
18	5UG–F387J–00	.RING, STOPPER	1					
19	5UG–F3844–00	.SEAL	1					
20	5UG–F3489–00	.BAND	2					
21	5UG–F3527–00	.SEAL, DUST 1	2					
22	JW1–F3837–00	.ROD, TIE 2	2					
23	JW1–F467K–00	.BUSH, CAP	1					
24	JW1–F3866–00	.CIRCLIP	1					
25	JW1–F3894–00	.WASHER, LOCK 1	2					
26	1P0–F3833–00	NUT 1	2					
27	JW8–23841–01	JOINT, UNIVERSAL 1	2					

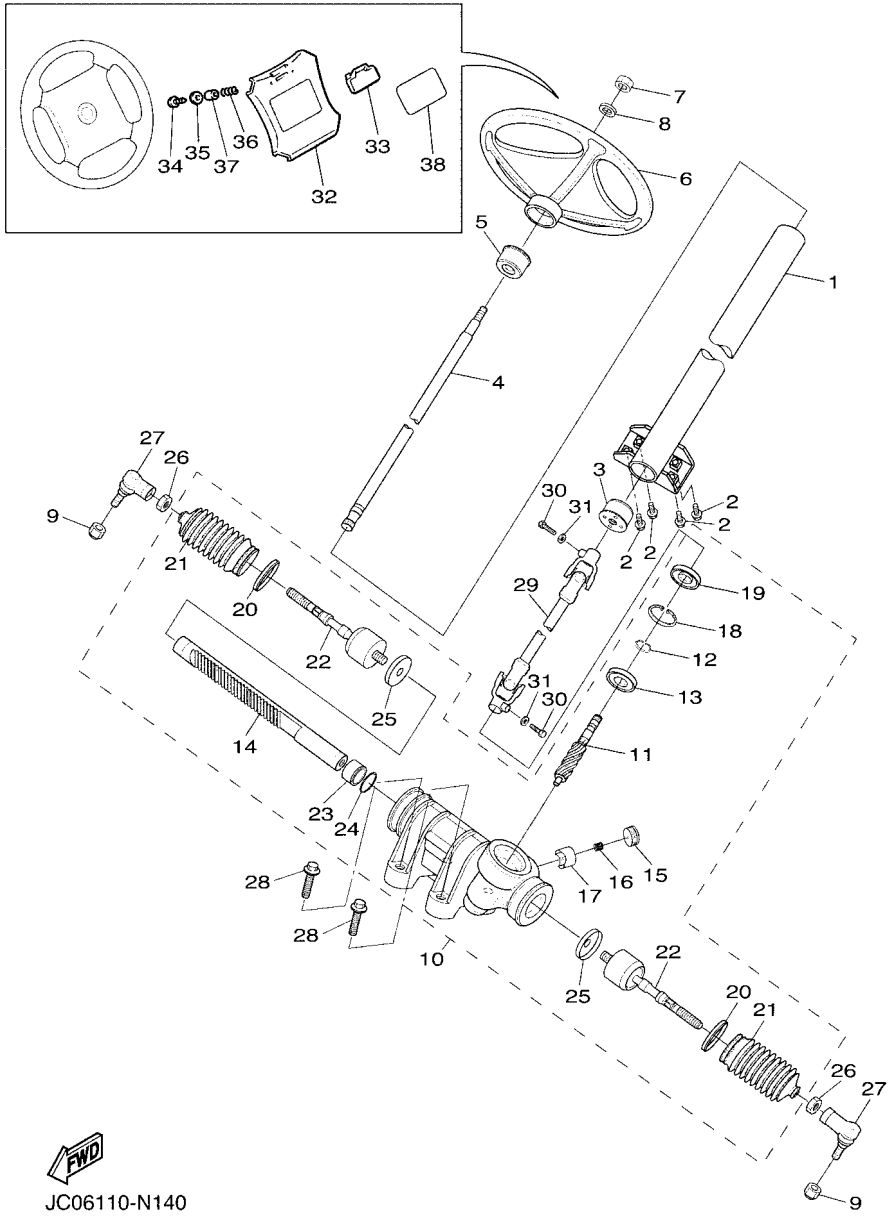

FIG. 14 STEERING

REF. NO.	PART NO.	DESCRIPTION	J0A1					REMARKS
28	90105–10847	BOLT, FLANGE	4					
29	JW1–F3822–01	JOINT 1	1					
30	97012–08030	BOLT	2					
31	92902–08600	WASHER, PLATE	2					
32	JW8–K8357–00	HOLDER 1	1					
33	JN6–K8358–01	HOLDER 2	1					
34	97702–40525	SCREW, TAPPING	2					
35	90201–04810	WASHER, PLATE	2					
36	90502–10013	SPRING, CONICAL	2					
37	90387–046N7	COLLAR	2					
38	JW8–K7762–00	LABEL, WARNING 2	1					UR FOR CAN
	JW8–K7762–11	LABEL, WARNING 2 (E, F)	1					UR EXCEPT FOR CAN
	JW8–K7762–21	LABEL, WARNING 2 (G, S)	1					UR EXCEPT FOR CAN

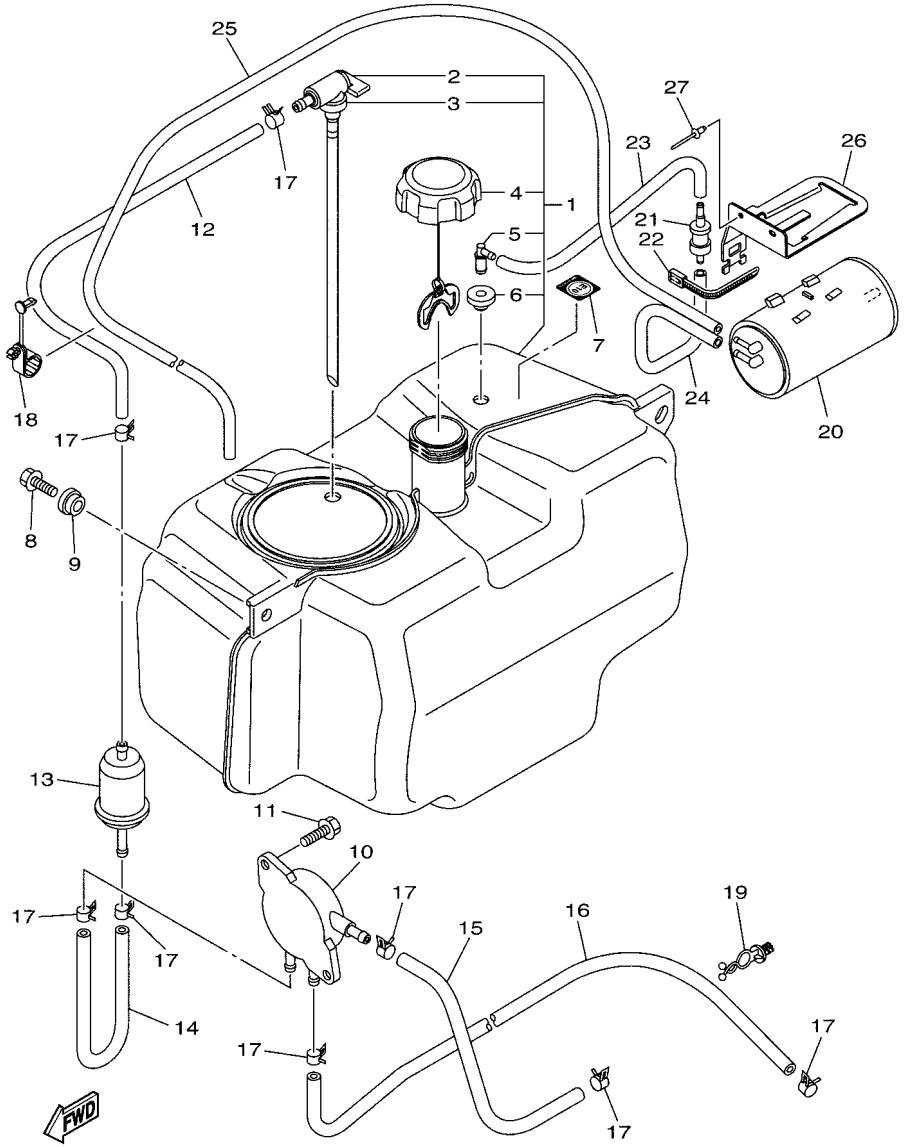

J0A1110-S150

FIG. 15 FUEL TANK 1

REF. NO.	PART NO.	DESCRIPTION	J0A1					REMARKS
1	JW8–F4111–20	TANK, FUEL	1					FOR CAN
2	JW1–F4300–10	.FUEL PIPE JOINT	1					
3	JU5–F4375–00	.GROMMET	1					
4	JW1–F4610–00	.CAP ASSY	1					
5	JW1–F4112–00	.PIPE	1					
6	JU5–F4375–00	.GROMMET	1					
7	B88–2817K–00	LABEL,FUEL	1					
8	JW1–F1738–00	BOLT	2					
9	90560–08251	SPACER	2					
10	JN6–F4410–11	FUEL PUMP ASSY	1					
11	JW1–F3394–00	BOLT, SPECIAL	2					
12	JW7–F4311–00	PIPE, FUEL 1	1					
13	JN6–F4560–00	FILTER ASSY	1					
14	JW1–F4311–00	PIPE, FUEL 1	1					
15	JW1–F4313–01	PIPE 3	1					
16	JW1–F4314–00	PIPE 4	1					
17	90467–10846	CLIP	8					
18	JW7–F312H–00	CLAMP	1					
19	90464–12836	CLAMP	1					
20	7CC–F4170–01	CANISTER ASSY	1					
21	4WM–24180–00	ROLL OVER VALVE ASSY	1					
22	90464–40825	CLAMP	1					
23	J0B–F4314–00	PIPE 4	1					
24	J0B–F4316–00	PIPE 6	1					
25	JW1–F4317–00	PIPE 7	1					
26	J0B–F419A–00	HOLDER	1					
27	JW7–K7329–00	RIVET	2					

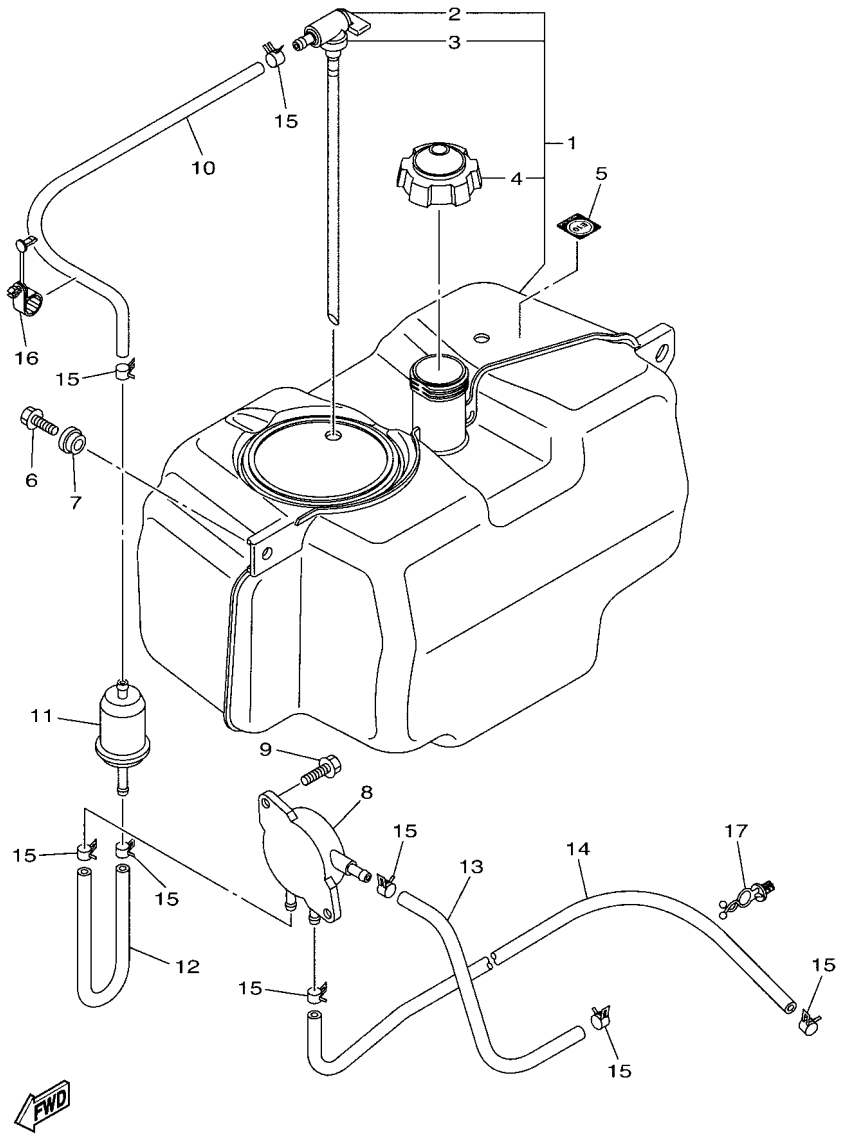

J0A1100-S160

FIG. 16 FUEL TANK 2

REF. NO.	PART NO.	DESCRIPTION	J0A1					REMARKS
1	JW8–F4111–30	TANK, FUEL	1					EXCEPT FOR CAN
2	JW1–F4300–10	.FUEL PIPE JOINT	1					
3	JU5–F4375–00	.GROMMET	1					
4	JN6–F4610–00	.CAP ASSY	1					
5	B88–2817K–00	LABEL,FUEL	1					
6	JW1–F1738–00	BOLT	2					
7	90560–08251	SPACER	2					
8	JN6–F4410–11	FUEL PUMP ASSY	1					
9	JW1–F3394–00	BOLT, SPECIAL	2					
10	JW7–F4311–00	PIPE, FUEL 1	1					
11	JN6–F4560–00	FILTER ASSY	1					
12	JW1–F4311–00	PIPE, FUEL 1	1					
13	JW1–F4313–01	PIPE 3	1					
14	JW1–F4314–00	PIPE 4	1					
15	90467–10846	CLIP	8					
16	JW7–F312H–00	CLAMP	1					
17	90464–12836	CLAMP	1					

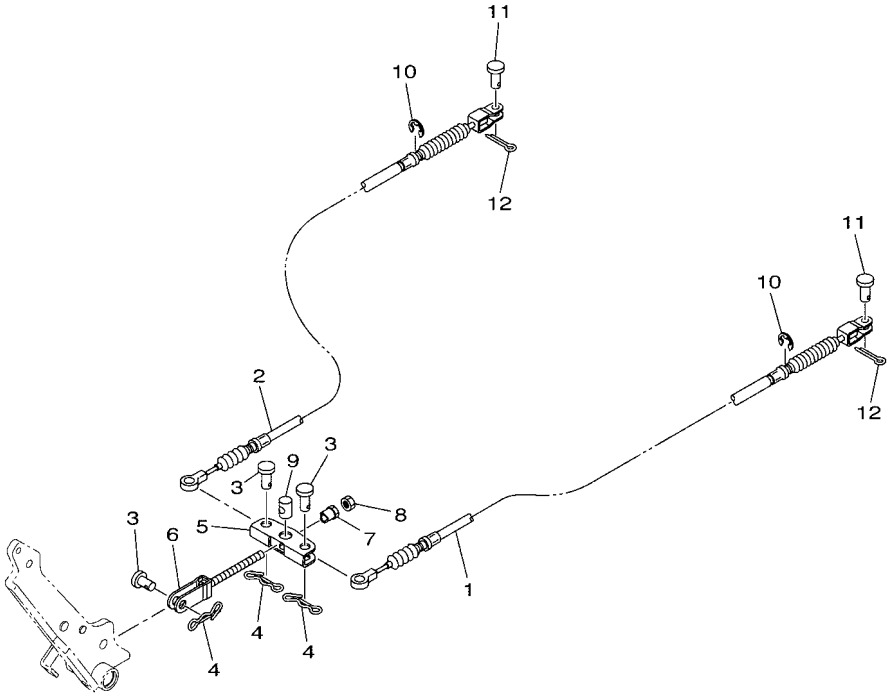

JC23100-P160

FIG. 17 PEDAL WIRE

REF. NO.	PART NO.	DESCRIPTION	J0A1					REMARKS
1	JW8–F6341–10	WIRE, BRAKE 1	1					
2	JW8–F6351–10	CABLE, BRAKE	1					
3	91702–10026	PIN, CLEVIS	3					
4	90468–20196	CLIP	3					
5	JW8–F5681–10	EQUALIZER, BRAKE	1					
6	JN6–F5685–01	ROD	1					
7	90179–08822	NUT	1					
8	95307–08700	NUT	1					
9	90249–14129	PIN	1					
10	99001–09600	CIRCLIP	2					
11	91702–08018	PIN, CLEVIS	2					
12	91490–25015	PIN. COTTER	2					

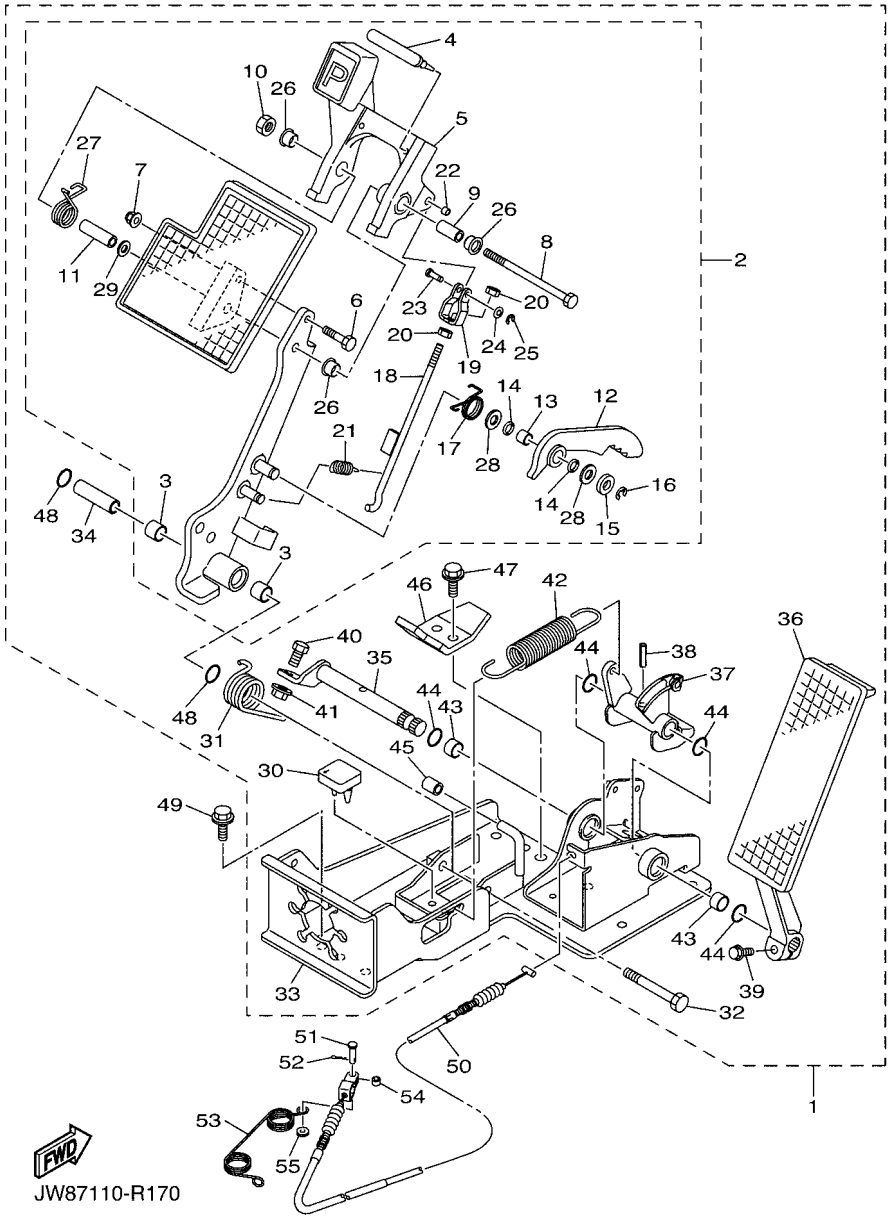

FIG. 18 PEDAL ASSEMBLY

REF. NO.	PART NO.	DESCRIPTION	J0A1					REMARKS
1	JW8–F7850–31	PEDAL ASSY (L.H)	1					
2	JW9–F7200–21	.PEDAL, BRAKE	1					
3	JW8–F7814–21	..BUSH, PEDAL	2					
4	JW9–F5672–00	..PAD, PARKING PEDAL	1					
5	JW9–F5671–00	..PEDAL, PARKING BRAKE	1					
6	JW8–F7117–00	..BOLT, MAIN STAND	1					
7	JW8–F8363–00	..NUT	1					
8	JW8–F7416–00	..BOLT, FOOTREST	1					
9	JW8–F639N–00	..COLLAR	1					
10	JW8–F7218–00	..NUT	1					
11	JW8–F7113–00	..COLLAR, MAIN STAND	1					
12	JW9–F5666–00	..SECTOR, PARKING BRAKE	1					
13	JW8–F7121–00	..BUSH	1					
14	JW9–F7221–00	..SEAL, SHAFT	2					
15	JW8–F7322–00	..WASHER	1					
16	JW8–F3183–00	..CIRCLIP	1					
17	JW8–F7426–01	..SPRING, RETURN	1					
18	JW9–F7231–10	..ROD, BRAKE	1					
19	JW9–F7232–00	..END, ROD 2	1					
20	JW8–F7318–00	..NUT	2					
21	JW8–F6314–00	..SPRING	1					
22	JW8–F639L–00	..BUSH 1	1					
23	JW9–F7228–00	..PIN, JOINT	1					
24	JW8–F8323–00	..WASHER, LEG SHIELD	1					
25	JW8–F5415–00	..CIRCLIP	1					
26	90386–12800	..BUSH	3					
27	JW8–F7825–01	..SPRING, RETURN	1					

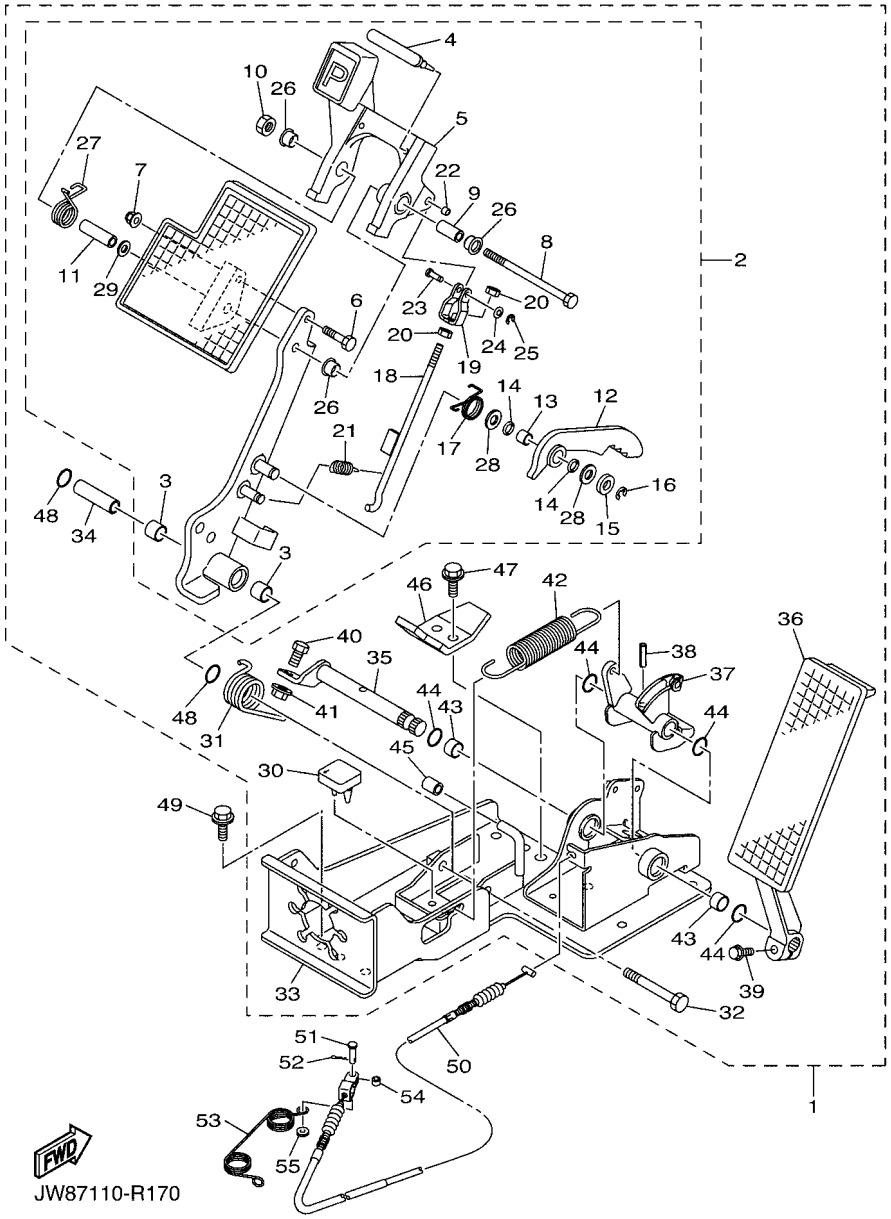

FIG. 18 PEDAL ASSEMBLY

REF. NO.	PART NO.	DESCRIPTION	J0A1					REMARKS
28	JW8–F7119–00	..WASHER	2					
29	JW8–F8319–00	..WASHER	1					
30	JW9–F7245–10	.PAD, BRAKE PEDAL	1					
31	JW8–F7316–01	.SPRING, SIDE STAND	1					
32	JW8–F7217–00	.BOLT	1					
33	JW8–F7445–31	.PLATE 1	1					
34	JW8–F7213–20	.COLLAR	1					
35	JW8–F7853–10	.SHAFT, PEDAL 1	1					
36	JW9–F7871–10	.PEDAL, ACCELERATOR	1					
37	JW8–F7872–30	.ARM, ACCELERATOR PEDAL	1					
38	JW8–F7438–00	.PIN, CLEVIS	1					
39	JW8–F7434–00	.BOLT	1					
40	JW8–F7317–00	.BOLT	1					
41	JW8–F7118–00	.NUT	1					
42	JW8–F815H–01	.SPRING	1					
43	JW8–F7814–21	.BUSH, PEDAL	2					
44	JW8–F4486–00	.O-RING	4					
45	JW9–F5673–00	.DAMPER, BRAKE	1					
46	JW9–F7246–20	.NAIL, BRAKE	1					
47	JW8–F8331–00	.BOLT, LEG SHIELD	2					
48	JW8–F4486–00	.O-RING	2					
49	95812–08020	BOLT, FLANGE	6					
50	JW8–F6311–20	CABLE, THROTTLE 1	1					
51	91702–05014	PIN, CLEVIS	1					
52	90468–10050	CLIP	1					
53	90508–16460	SPRING, TORSION	1					
54	90560–05001	SPACER	1					

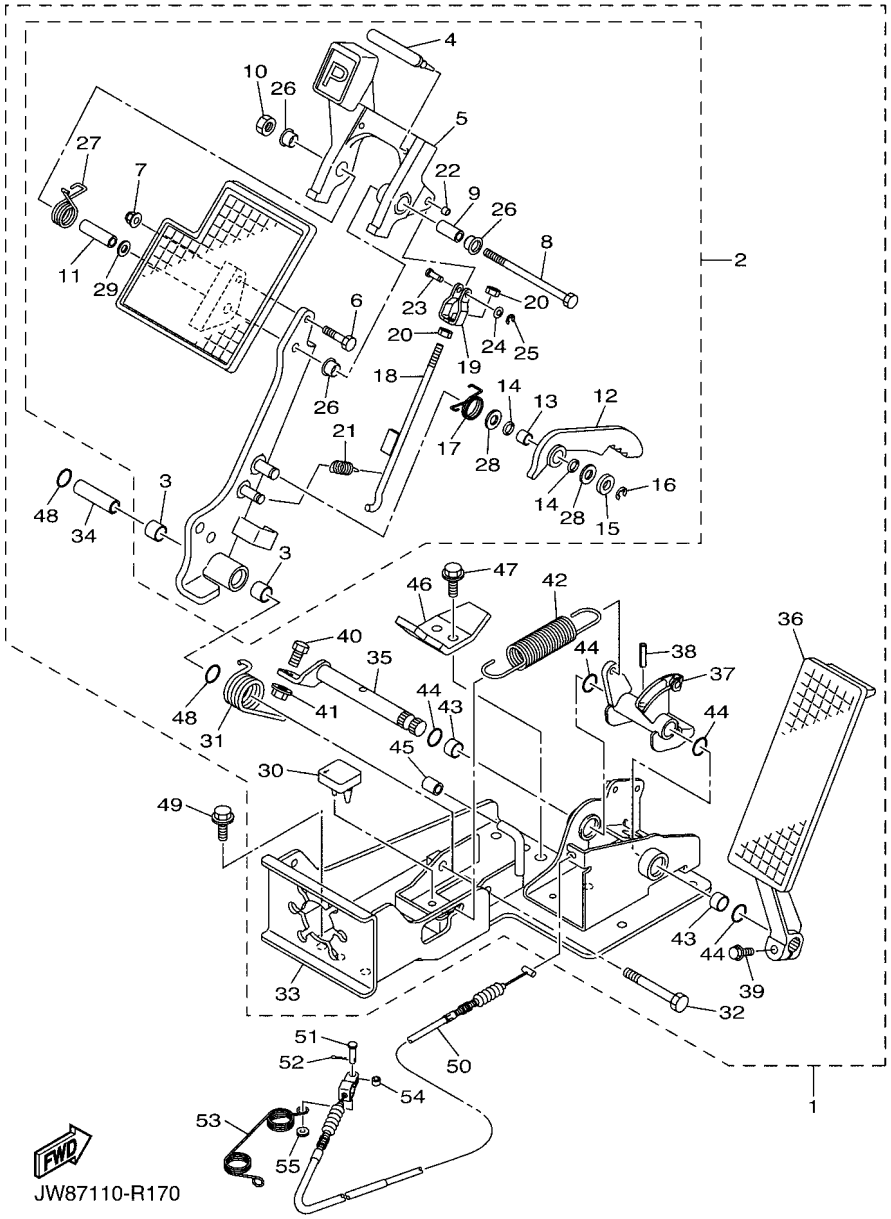

FIG. 18 PEDAL ASSEMBLY

REF. NO.	PART NO.	DESCRIPTION	J0A1					REMARKS
55	JW8–G2181–00	WASHER	1					

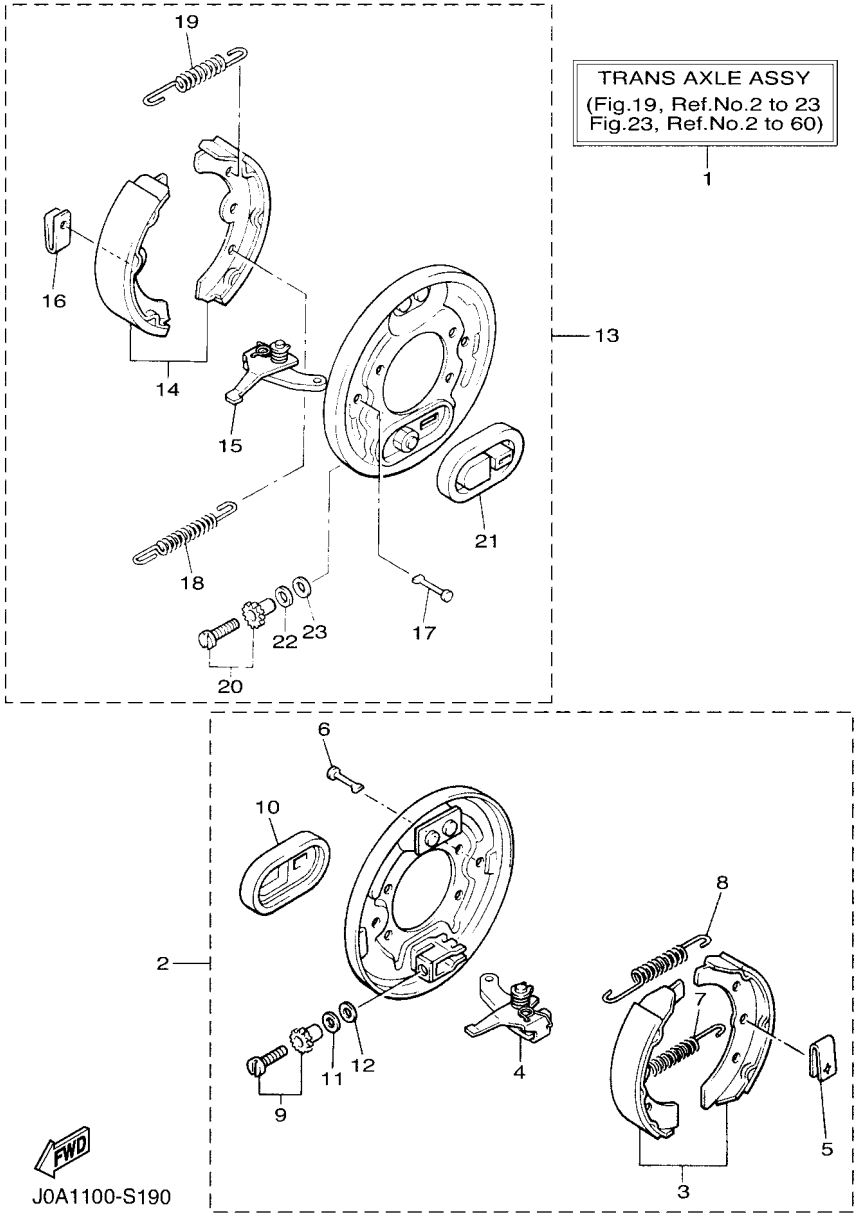

FIG. 19 BRAKE

REF. NO.	PART NO.	DESCRIPTION	J0A1					REMARKS
1	J0A–G6300–00	TRANS AXLE ASSY	1					
2	JW8–F7290–00	.BACKING PLATE ASSY 2	1					
3	JN9–W2536–00	..BRAKE SHOE SET	1					
4	J38–27205–00	..LEVER ASSY 2	1					
5	JW8–F7281–00	..SPRING, SHOE CLAMP	2					
6	J10–27282–00	..PIN, SHOE HOLD DOWN	2					
7	90506–20281	..SPRING, TENSION	1					
8	90506–14001	..SPRING, TENSION	1					
9	J55–27260–00	..ADJUSTER ASSY	1					
10	JW8–F7286–00	..COVER, DUST	1					
11	90201–121H9	..WASHER, PLATE	1					
12	90201–121H8	..WASHER, PLATE	1					
13	JW8–F7280–00	.BACKING PLATE ASSY 1	1					
14	JN9–W2536–00	..BRAKE SHOE SET	1					
15	J38–27204–00	..LEVER ASSY 1	1					
16	JW8–F7281–00	..SPRING, SHOE CLAMP	2					
17	J10–27282–00	..PIN, SHOE HOLD DOWN	2					
18	90506–20281	..SPRING, TENSION	1					
19	90506–14001	..SPRING, TENSION	1					
20	J55–27270–00	..ADJUSTER ASSY	1					
21	JW8–F7286–00	..COVER, DUST	1					
22	90201–121H9	..WASHER, PLATE	1					
23	90201–121H8	..WASHER, PLATE	1					

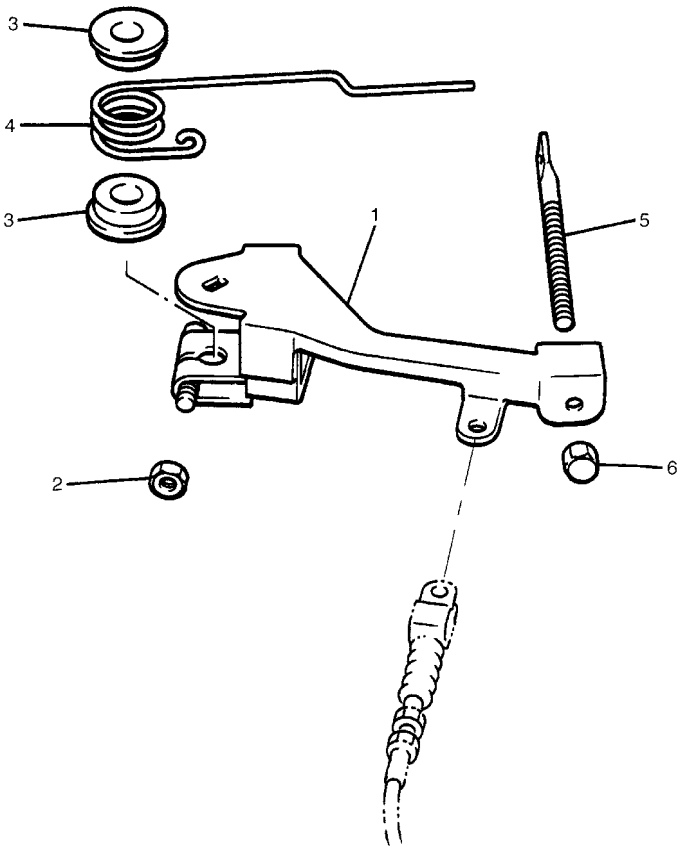

JT71010-B190

FIG. 20 GOVERNOR

REF. NO.	PART NO.	DESCRIPTION	J0A1					REMARKS
1	J38–27951–00	LEVER, SPEED LIMITER	1					
2	95380–06600	NUT, HEXAGON	1					
3	90386–08141	BUSH	2					
4	90508–40678	SPRING, TORSION	1					
5	J38–27959–00	SCREW, ADJUSTING	1					
6	95602–06200	NUT, SELF-LOCKING	1					

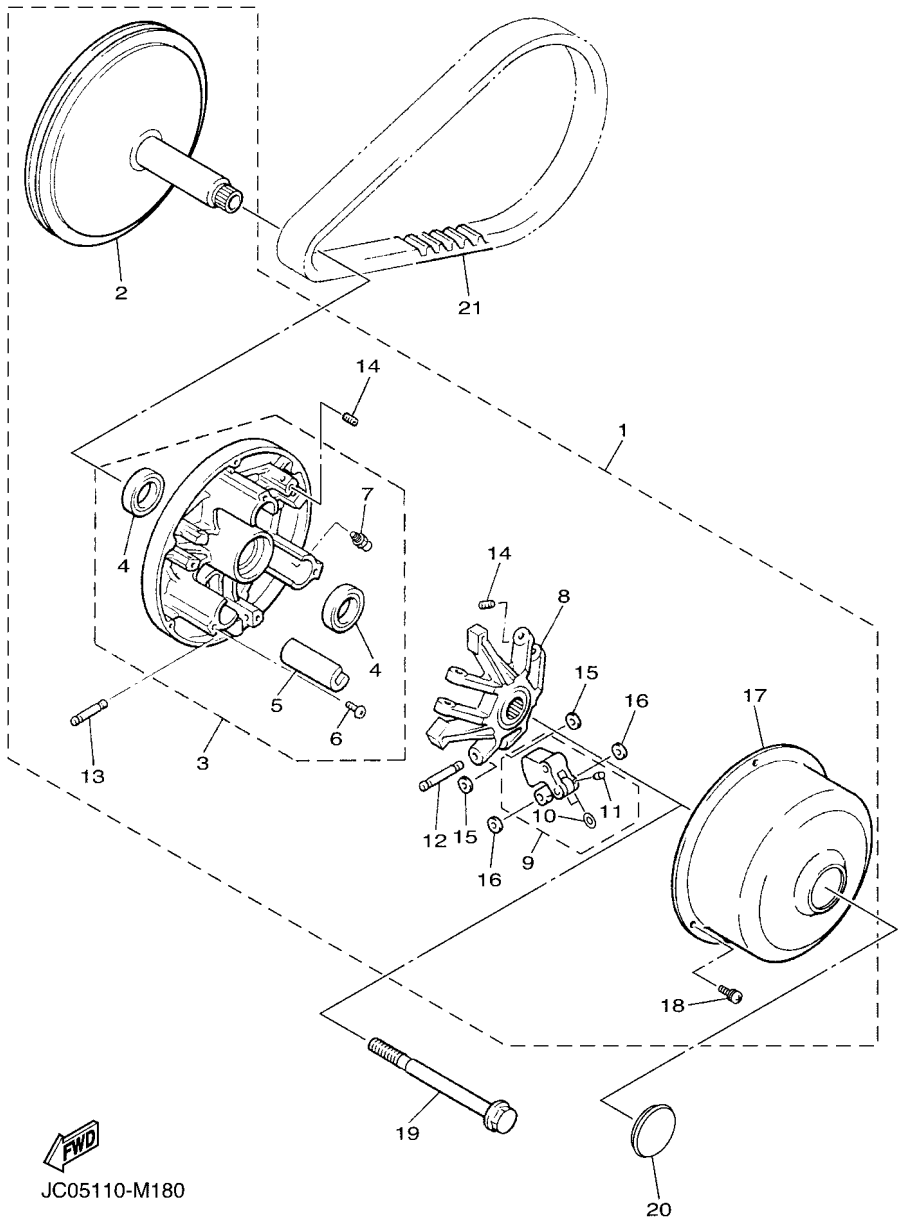

FIG. 21 PRIMARY SHEAVE

REF. NO.	PART NO.	DESCRIPTION	J0A1					REMARKS
1	J0B–G6201–01	PRIMARY CLUTCH ASSY	1					
2	JW8–G6210–01	.PRIMARY FIXED SHEAVE COMP.	1					
3	J0B–G6220–01	.PRIMARY SLIDING SHEAVE COMP.	1					
4	JW8–G624A–00	..OIL SEAL 1	2					
5	JW8–G6253–00	..SLIDER	3					
6	JW8–G4189–00	..SCREW	3					
7	JW8–F135J–00	..NIPPLE	1					
8	JW8–G6251–21	.SPIDER	1					
9	JW8–G6205–22	.WEIGHT LINK ASSY	3					
10	JW8–G5618–00	..WASHER, 1	2					
11	90113–04803	..BOLT, SET	2					
12	JW8–G6236–20	.PIN, WEIGHT	3					
13	JW8–G6237–20	.PIN, WEIGHT 2	3					
14	90113–04803	.BOLT, SET	6					
15	JW8–G5618–00	.WASHER, 1	6					
16	JW8–G5621–00	.WASHER, 2	6					
17	J0B–G6231–00	.CAP	1					
18	JW8–G5282–00	.SCREW	3					
19	JW8–G6249–00	BOLT	1					
20	JW8–G7339–00	PLUG	1					
21	J55–G6241–01	BELT	1					

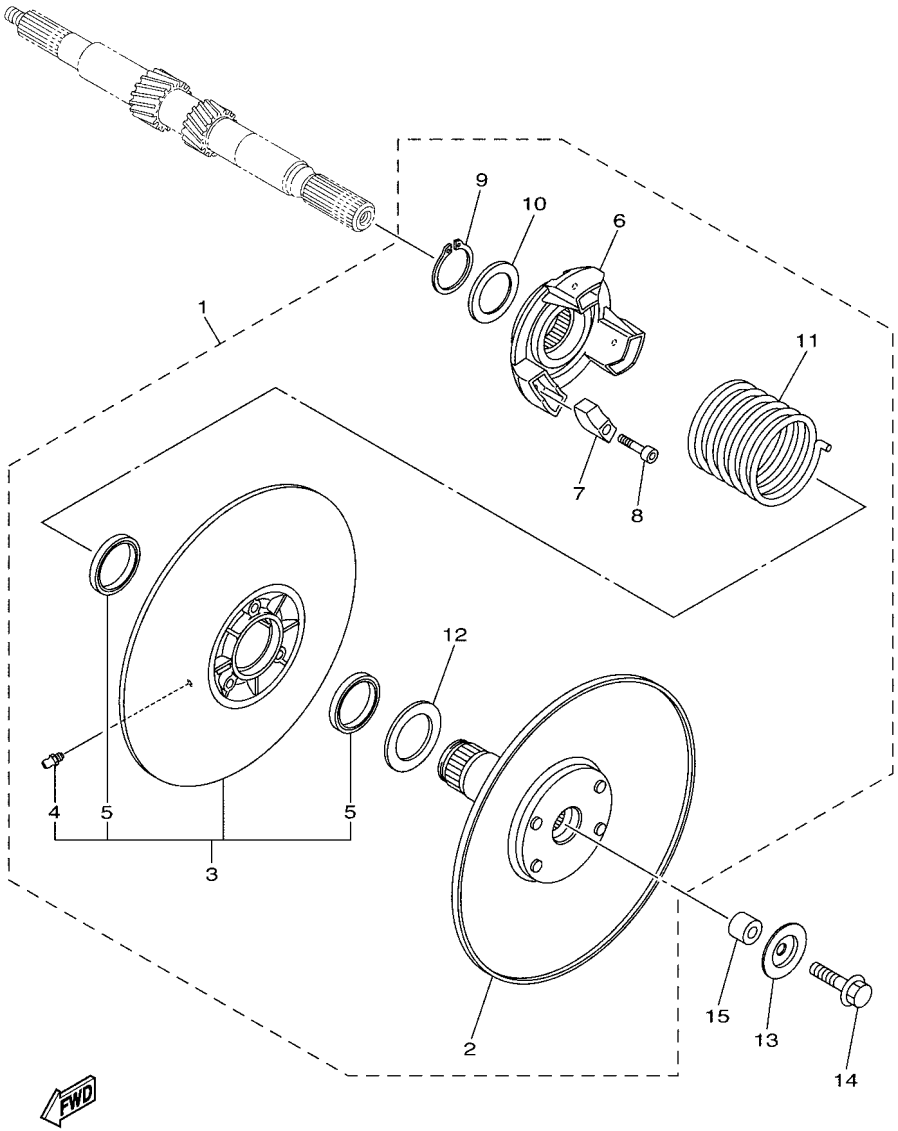

JC05110-M190

FIG. 22 SECONDARY SHEAVE

REF. NO.	PART NO.	DESCRIPTION	J0A1					REMARKS
1	JW8–G6202–22	SECONDARY SHEAVE ASSY	1					
2	JW8–G6260–22	.SECONDARY FIXED SHEAVE COMP.	1					
3	JW8–G6270–21	.SECONDARY SLIDING SHEAVE COMP.	1					
4	JW8–F135J–00	..NIPPLE	1					
5	JW8–G624B–00	..OIL SEAL 2	2					
6	JW8–G6284–00	.SEAT, SECONDARY SPRING	1					
7	JW8–E7688–00	.SHOE, RAMP	3					
8	JW8–G6159–00	.BOLT 3	3					
9	JW8–G5531–00	.CLIP, DRIVE SHAFT	1					
10	JW8–G6374–00	.COLLAR, SPRING	1					
11	JW8–G6275–10	.SPRING, CLUTCH 1	1					
12	JW8–G5677–00	.WASHER	1					
13	90209–08018	WASHER	1					
14	90105–08260	BOLT, FLANGE	1					
15	JW8–G5697–20	COLLAR	1					

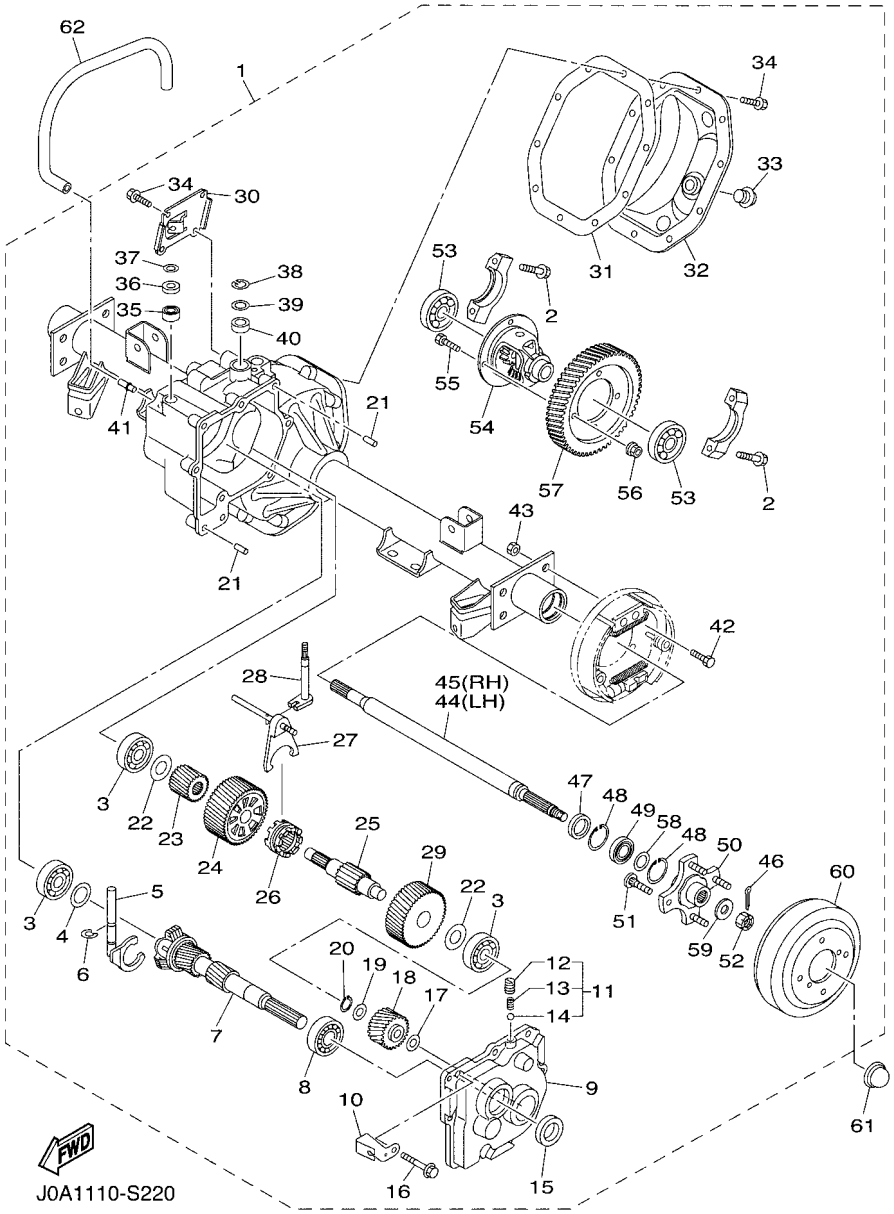

FIG. 23 TRANSAXLE

REF. NO.	PART NO.	DESCRIPTION	J0A1					REMARKS
1	J0A–G6300–00	TRANS AXLE ASSY	1					
2	90105–10840	.BOLT, FLANGE	4					
3	93306–303Y6	.BEARING	3					
4	JN3–G6344–00	.SHIM, 0.76MM (0.030IN)	1					
5	JW8–G633E–00	.BAR 1	1					
6	JU0–F722H–00	.RETAINER	1					
7	JW8–G6320–00	.INPUT SHAFT ASSY	1					
8	93306–005Y1	.BEARING	1					
9	JW8–G6313–10	.COVER, TRNSMISSION	1					
10	JW8–G6555–00	.BRACKET 2	1					
11	JU0–G6376–00	.SPRING SET	1					
12	90113–08803	..BOLT, SET	1					
13	90501–10852	..SPRING, COMPRESSION	1					
14	93500–06826	..BALL	1					
15	93102–25868	.OIL SEAL	1					
16	90105–08859	.BOLT, FLANGE	7					
17	90201–208H9	.WASHER, PLATE	1					
18	JN3–G6356–00	.GEAR, IDLER	1					
19	90201–208J0	.WASHER, PLATE	1					
20	JW8–F47E3–00	.CIRCLIP	1					
21	93606–10842	.PIN, DOWEL	2					
22	90201–178H8	.WASHER, PLATE	2					
23	JN3–G6316–00	.GEAR, PINION 1	1					
24	JN3–G6326–00	.GEAR, WHEEL 1	1					
25	JN3–G633G–00	.SHAFT	1					
26	JN3–G6153–00	.COLLAR, GUIDE	1					
27	JN6–G638E–00	.BAR, SHIFT 2	1					

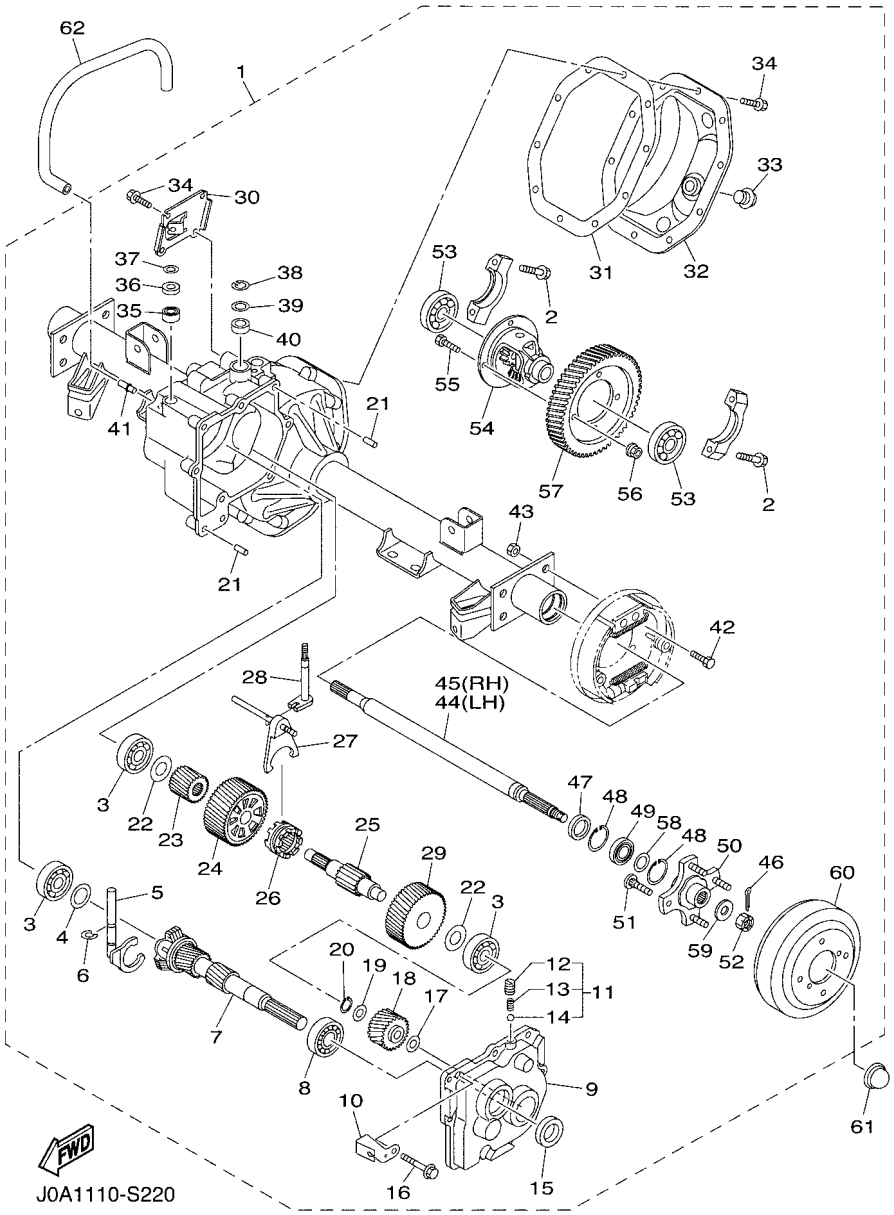

FIG. 23 TRANSAXLE

REF. NO.	PART NO.	DESCRIPTION	J0A1					REMARKS
28	JW8–G638A–00	.BAR, SHIFT 1	1					
29	JN3–G6327–00	.GEAR, WHEEL 2	1					
30	JW8–G1661–00	.BRACKET 1	1					
31	JU0–G631A–00	.GSKT., CASE	1					
32	JW8–G6314–10	.COVER, TRANSMISSION	1					
33	JN3–G6432–00	.STOPPER	1					
34	90101–08856	.BOLT	12					
35	JU0–G6164–00	.BEARING 1	1					
36	93109–10820	.OIL SEAL	1					
37	JU0–F723F–00	.WASHER, SPECIAL	1					
38	93410–12822	.CIRCLIP	1					
39	90202–12807	.WASHER, PLATE	1					
40	93104–11829	.OIL SEAL	1					
41	JW8–G5378–00	.NIPPLE, HOSE	1					
42	90101–08855	.BOLT	8					
43	90170–08841	.NUT	8					
44	JN3–G6511–00	.SHAFT, REAR AXLE 1 (L.H)	1					
45	JN3–G6512–00	.SHAFT, REAR AXLE 2 (R.H)	1					
46	91490–30030	.PIN. COTTER	2					
47	93101–24822	.OIL SEAL	2					
48	93420–44805	.CIRCLIP	4					
49	93306–00440	.BEARING	2					
50	JW8–G6514–00	.HUB, REAR AXLE	2					
51	JW8–G4178–00	.BOLT, STUD	8					
52	JW8–G5244–00	.NUT	2					
53	93306–007Y0	.BEARING	2					
54	JN6–G6410–00	.DIFFERENTIAL ASSY.	1					

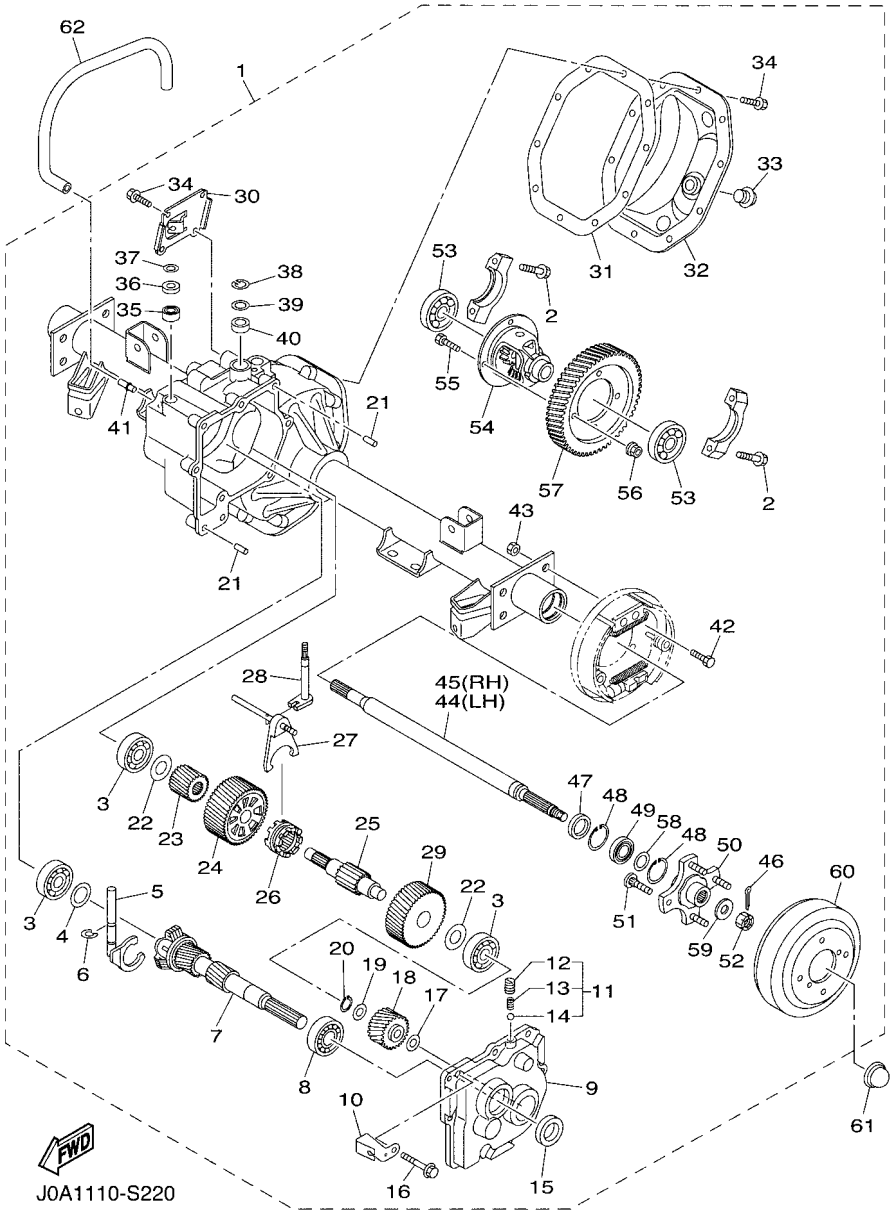

FIG. 23 TRANSAXLE

REF. NO.	PART NO.	DESCRIPTION	J0A1					REMARKS
55	90101–10854	.BOLT	4					
56	90170–10840	.NUT	4					
57	JN3–G6355–00	.GEAR, PRIMARY	1					
58	JW8–G2535–00	.WASHER, THRUST	2					
59	JW8–G2536–00	.WASHER, THRUST 2	2					
60	JW8–G6521–00	.DRUM	2					
61	JW8–F5118–00	COVER, HUB DUST	2					
62	JW8–G2541–00	PIPE 1	1					

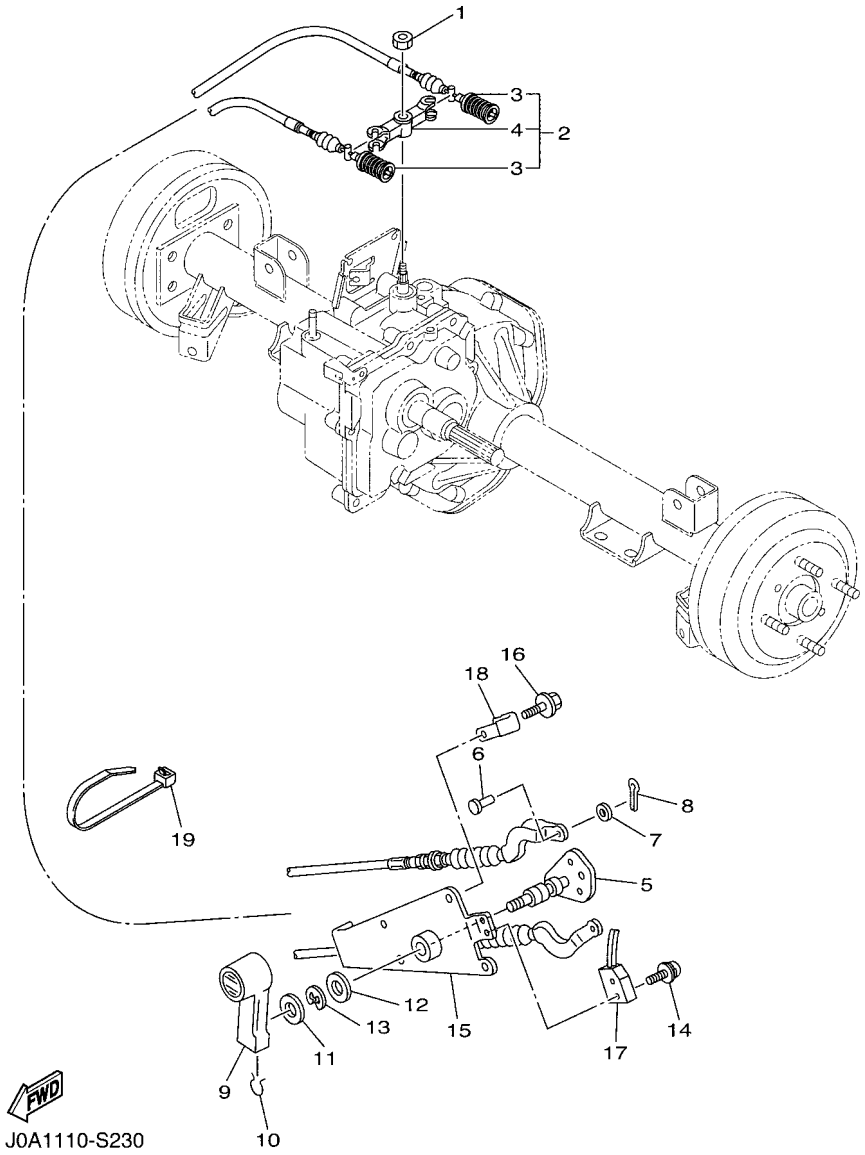

FIG. 24 SHIFTER & CABLES

REF. NO.	PART NO.	DESCRIPTION	J0A1					REMARKS
1	95602–08100	NUT, U	1					
2	JW8–G8330–10	CABLE END ASSY	1					
3	JW8–G6371–10	.WIRE, SHIFT	2					
4	JW8–G6383–10	.LEVER, SHIFT 2	1					
5	J0B–G6382–00	LEVER, SHIFT 1	1					
6	91702–06014	PIN, CLEVIS	2					
7	92902–06600	WASHER, PLATE	2					
8	91402–20012	PIN, COTTER	2					
9	JN3–G6381–00	KNOB, SHIFT	1					
10	JN3–G6376–00	SPRING SET	1					
11	90201–208S8	WASHER, PLATE	1					
12	90201–198S7	WASHER, PLATE	1					
13	99009–19400	CIRCLIP	1					
14	97602–04316	SCREW, PAN HEAD WITH WASHER	2					
15	J0B–G6372–00	BRACKET, SHIFT WIRE	1					
16	90105–06831	BOLT, FLANGE	3					
17	JN3–82617–01	SWITCH	1					
18	90465–06038	CLAMP	1					
19	90464–76800	CLAMP	1					

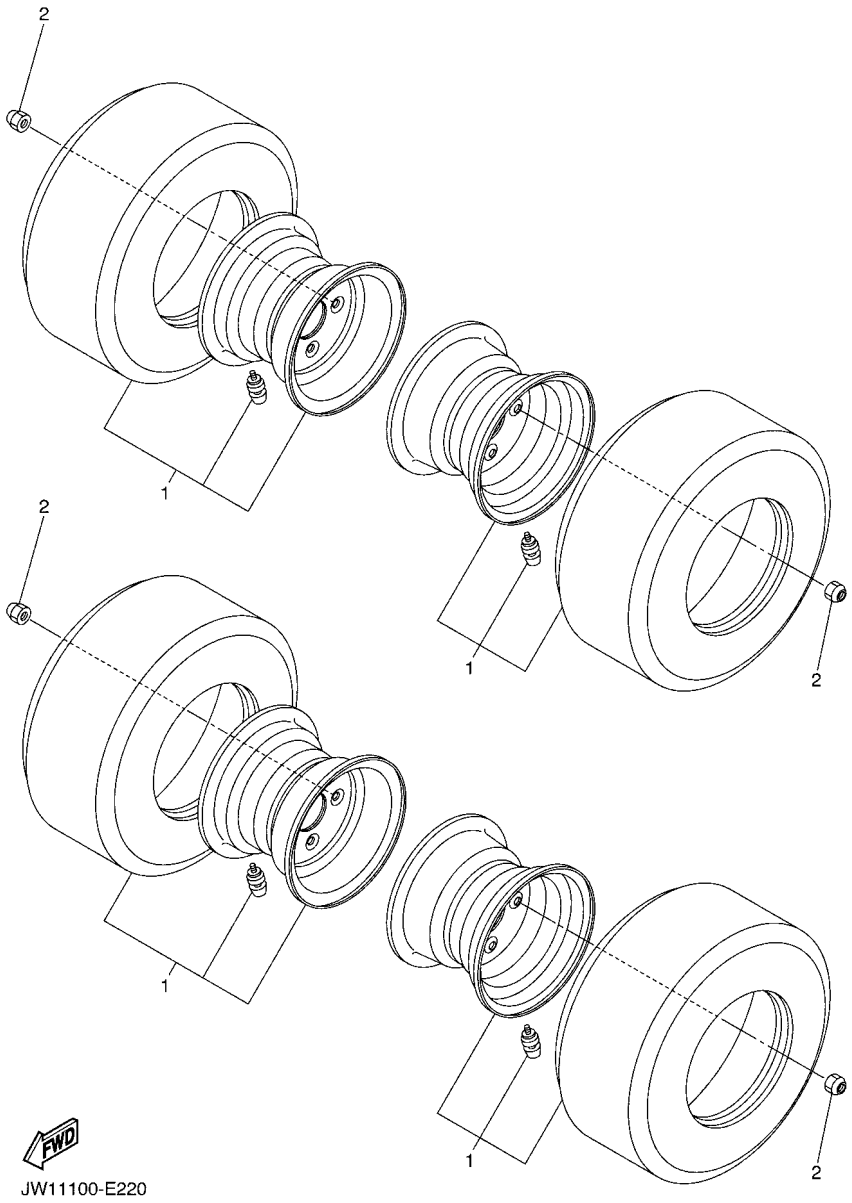

FIG. 25 WHEEL

REF. NO.	PART NO.	DESCRIPTION	J0A1					REMARKS
1	JW1–F5100–01	WHEEL ASSY (18X8.50-8-4PLY)	4					
2	90179–12262	NUT	16					

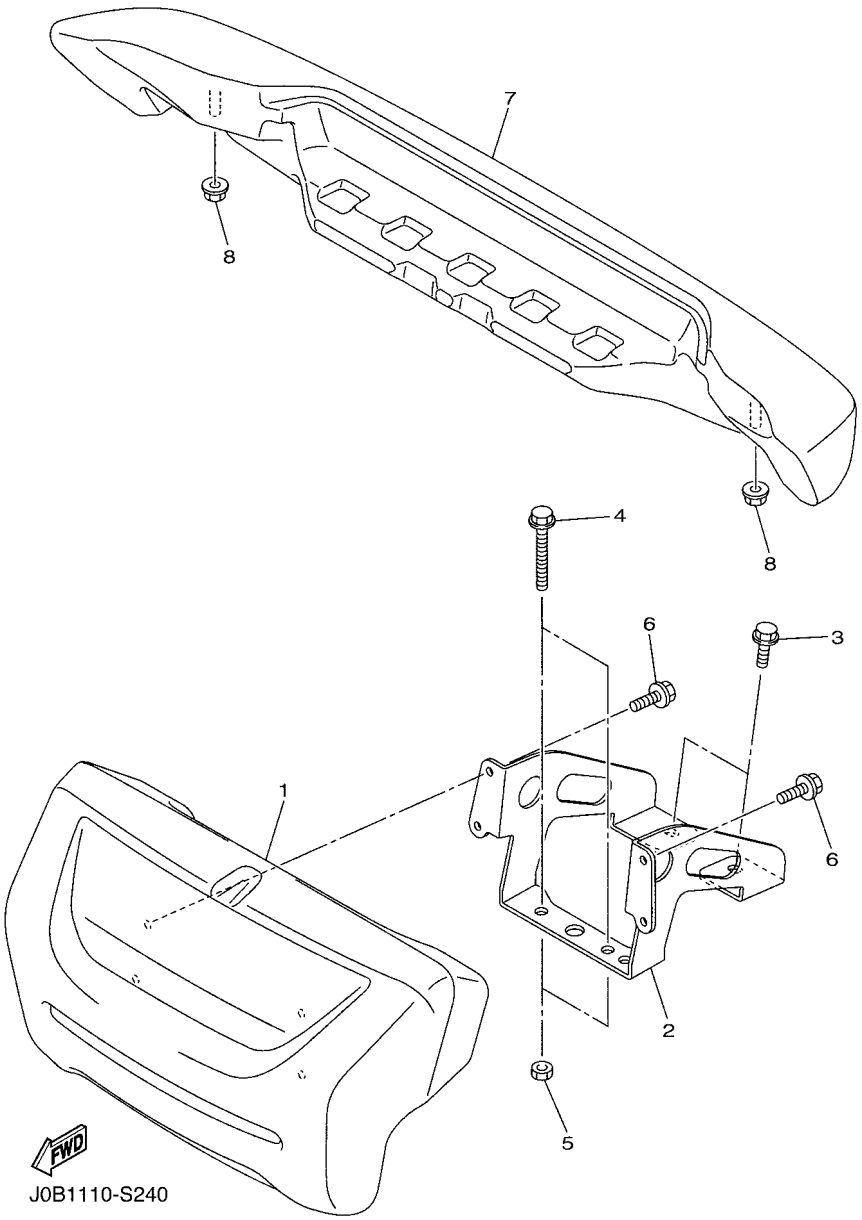

FIG. 26 BUMPER

REF. NO.	PART NO.	DESCRIPTION	J0A1					REMARKS
1	J0B–K7510–00	FRONT BUMPER COMP.	1					
2	J0B–K8164–00	STAY, FRONT BUMPER (L.H)	1					
3	95812–08016	BOLT, FLANGE	2					
4	95812–08050	BOLT, FLANGE	2					
5	95302–08700	NUT, HEXAGON	2					
6	95822–06012	BOLT, FLANGE	4					
7	JW8–K7540–00	REAR BUMPER COMP.	1					
8	95602–10200	NUT, S/L FLANGE	2					

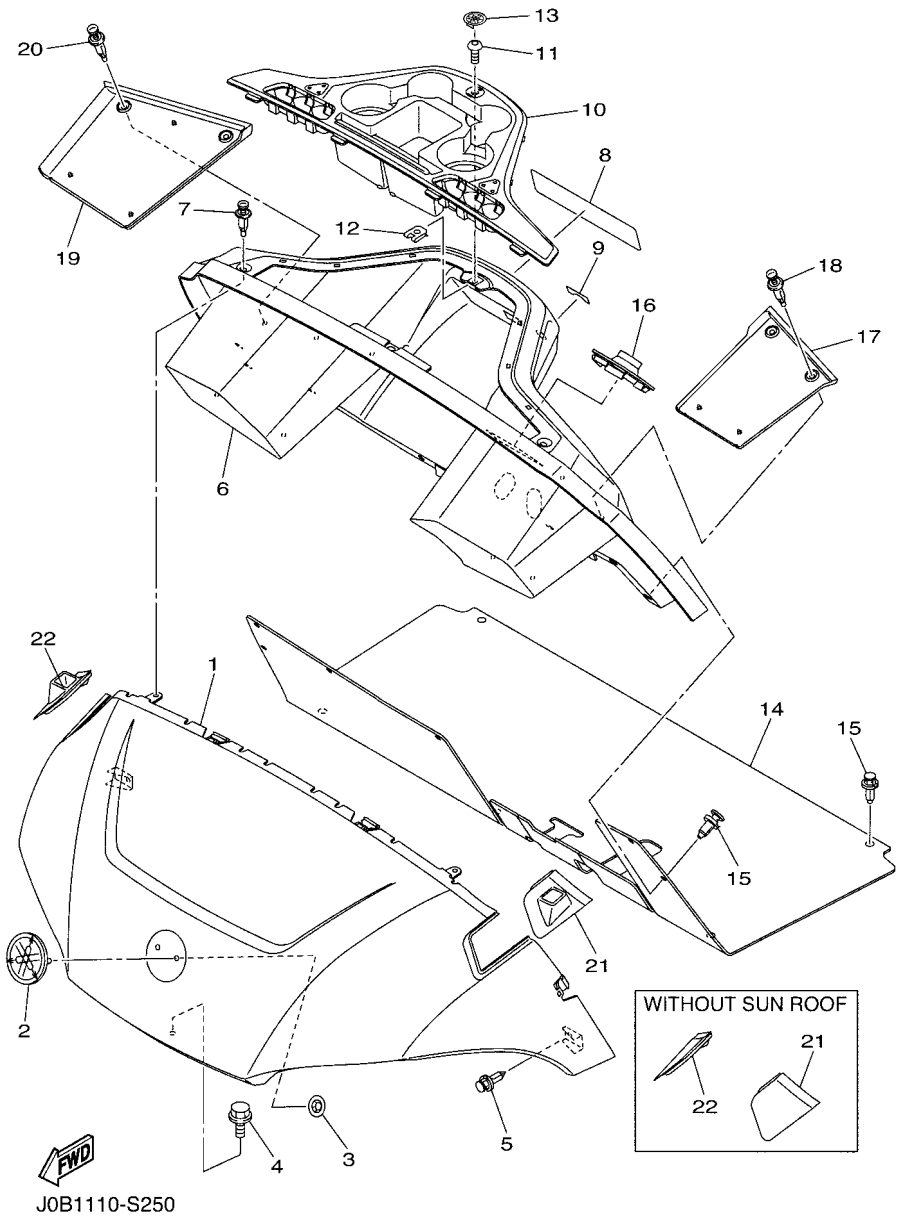

FIG. 27 BODY

REF. NO.	PART NO.	DESCRIPTION	J0A1					REMARKS
1	J0B–K8115–A0	COWL, FRONT	1					UR FOR BW1
	J0B–K8115–10	COWL, FRONT	1					UR FOR VDGS1
	J0B–K8115–00	COWL, FRONT	1					UR FOR DNBME
	J0B–K8115–20	COWL, FRONT	1					UR FOR LNYM8
	J0B–K8115–30	COWL, FRONT	1					UR FOR LNMP
	J0B–K8115–40	COWL, FRONT	1					UR FOR DYNM2
	J0B–K8115–B0	COWL, FRONT	1					UR FOR NYS4
	J0B–K8115–50	COWL, FRONT	1					UR FOR HTR
	J0B–K8115–60	COWL, FRONT	1					UR FOR DNMC
2	J0B–F4161–00	EMBLEM 1	1					
3	JU0–K7573–00	NUT, SPECIAL	2					
4	90105–06831	BOLT, FLANGE	1					
5	90269–06804	RIVET	2					
6	J0B–K8114–00	PANEL, FRONT	1					
7	90269–07803	RIVET	3					
8	J0B–K7768–00	LABEL, WARNING 8	1					UR ENGLISH
	J0B–K7768–10	LABEL, WARNING 8	1					UR ENGLISH/FRENCH
	J0B–K7768–20	LABEL, WARNING 8	1					UR GERMAN/SPANISH
9	J0B–K8282–00	PLATE, SWITCH PANEL	1					
10	J0B–K835E–00	HOLDER, BEVERAGE	1					
11	90111–05805	BOLT,HEX. SOCKET BUTTON	1					
12	90183–05008	NUT, SPRING	1					
13	J0B–H2370–00	PLUG CAP ASSY	1					
14	J0B–K8233–00	MAT, MAIN FLOOR 3	1					
15	90269–09003	RIVET	12					
16	J0B–K8273–00	COVER, HOLE	1					
17	J0B–K8243–00	MAT, REAR BODY SIDE (LH)	1					

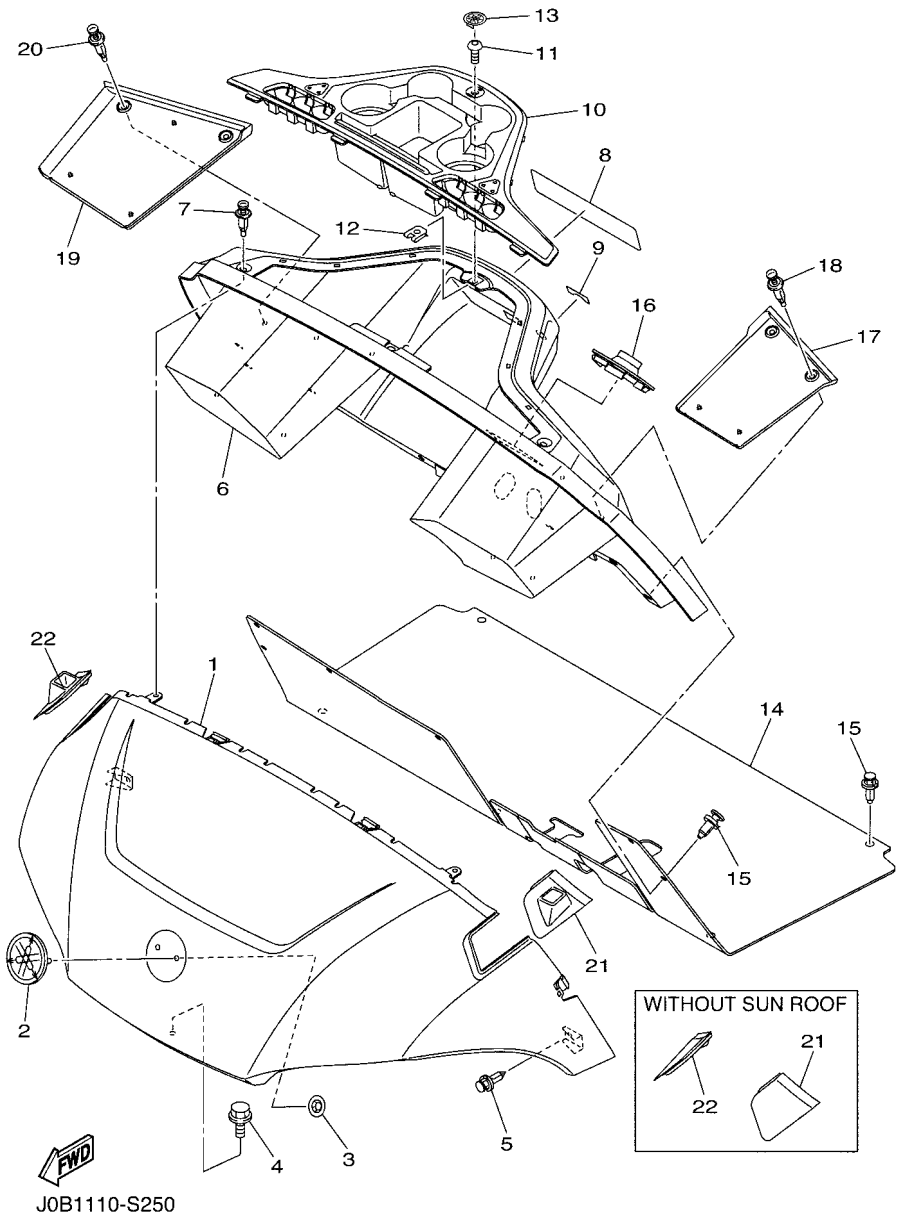

FIG. 27 BODY

REF. NO.	PART NO.	DESCRIPTION	J0A1					REMARKS
18	90269–07803	RIVET	2					
19	J0B–K8244–00	MAT, REAR BODY SIDE (RH)	1					
20	90269–07803	RIVET	2					
21	J0B–K832F–10	GROMMET, ROOF SUPPORT 1	1					WITH SUN ROOF
	J0B–K832F–00	GROMMET, ROOF SUPPORT 1	1					WITHOUT SUN ROOF
22	J0B–K832G–10	GROMMET, ROOF SUPPORT 2	1					WITH SUN ROOF
	J0B–K832G–00	GROMMET, ROOF SUPPORT 2	1					WITHOUT SUN ROOF

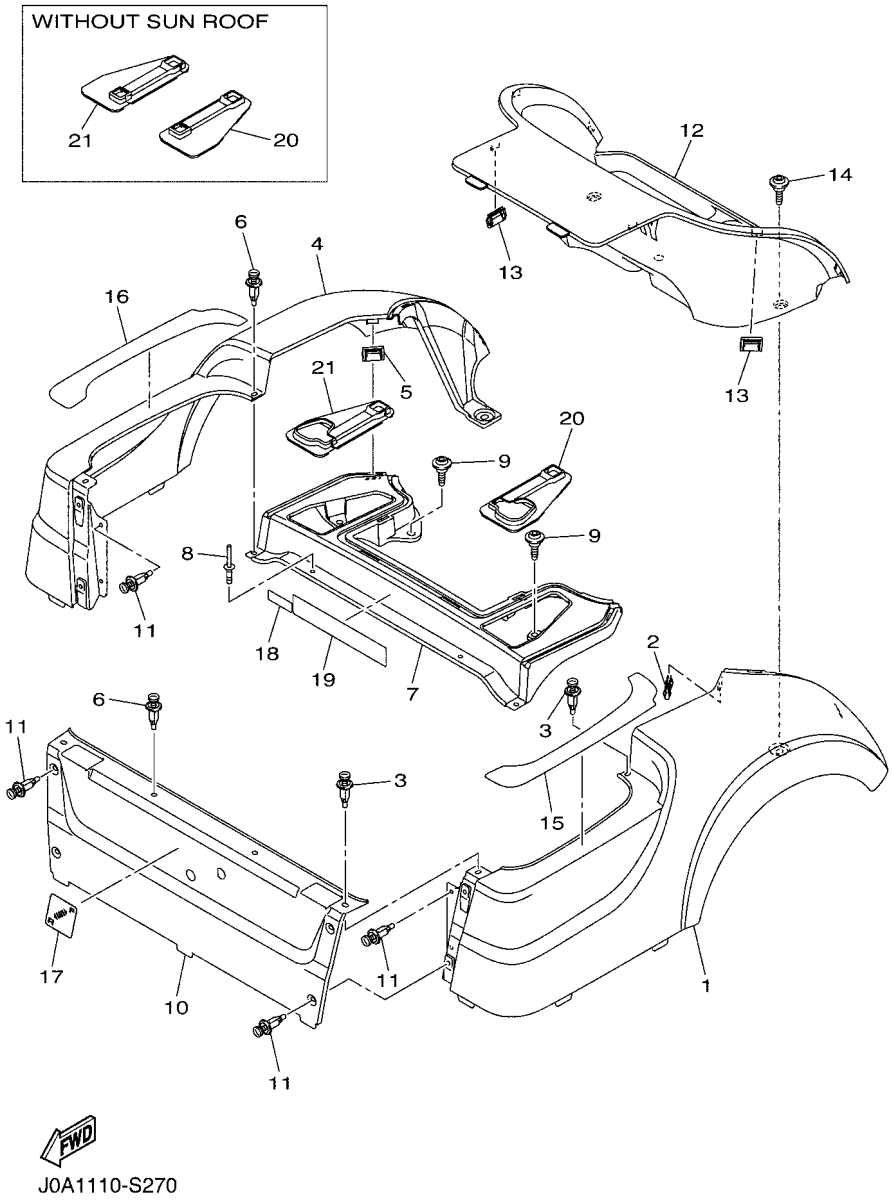

FIG. 28 BODY 2

REF. NO.	PART NO.	DESCRIPTION	J0A1					REMARKS
1	J0B–K8111–A0	PANEL, BODY SHELL	1					UR FOR BW1
	J0B–K8111–10	PANEL, BODY SHELL	1					UR FOR VDGS1
	J0B–K8111–00	PANEL, BODY SHELL	1					UR FOR DNBME
	J0B–K8111–20	PANEL, BODY SHELL	1					UR FOR LNYM8
	J0B–K8111–30	PANEL, BODY SHELL	1					UR FOR LNMP
	J0B–K8111–40	PANEL, BODY SHELL	1					UR FOR DYNM2
	J0B–K8111–B0	PANEL, BODY SHELL	1					UR FOR NYS4
	J0B–K8111–50	PANEL, BODY SHELL	1					UR FOR HTR
	J0B–K8111–60	PANEL, BODY SHELL	1					UR FOR DNMC
2	J0B–F3447–00	CLIP	1					
3	90269–07803	RIVET	3					
4	J0B–K8112–A0	PANEL, BODY SHELL	1					UR FOR BW1
	J0B–K8112–10	PANEL, BODY SHELL	1					UR FOR VDGS1
	J0B–K8112–00	PANEL, BODY SHELL	1					UR FOR DNBME
	J0B–K8112–20	PANEL, BODY SHELL	1					UR FOR LNYM8
	J0B–K8112–30	PANEL, BODY SHELL	1					UR FOR LNMP
	J0B–K8112–40	PANEL, BODY SHELL	1					UR FOR DYNM2
	J0B–K8112–B0	PANEL, BODY SHELL	1					UR FOR NYS4
	J0B–K8112–50	PANEL, BODY SHELL	1					UR FOR HTR
	J0B–K8112–60	PANEL, BODY SHELL	1					UR FOR DNMC
5	J0B–F3447–00	CLIP	1					
6	90269–07803	RIVET	3					
7	J0B–K819H–00	SHELL, REAR BODY	1					
8	JW7–K7329–00	RIVET	2					
9	J0B–F1738–00	BOLT	4					
10	J0B–K8141–A0	PANEL, INTERMEDIATE BODY	1					UR FOR BW1
	J0B–K8141–10	PANEL, INTERMEDIATE BODY	1					UR FOR VDGS1

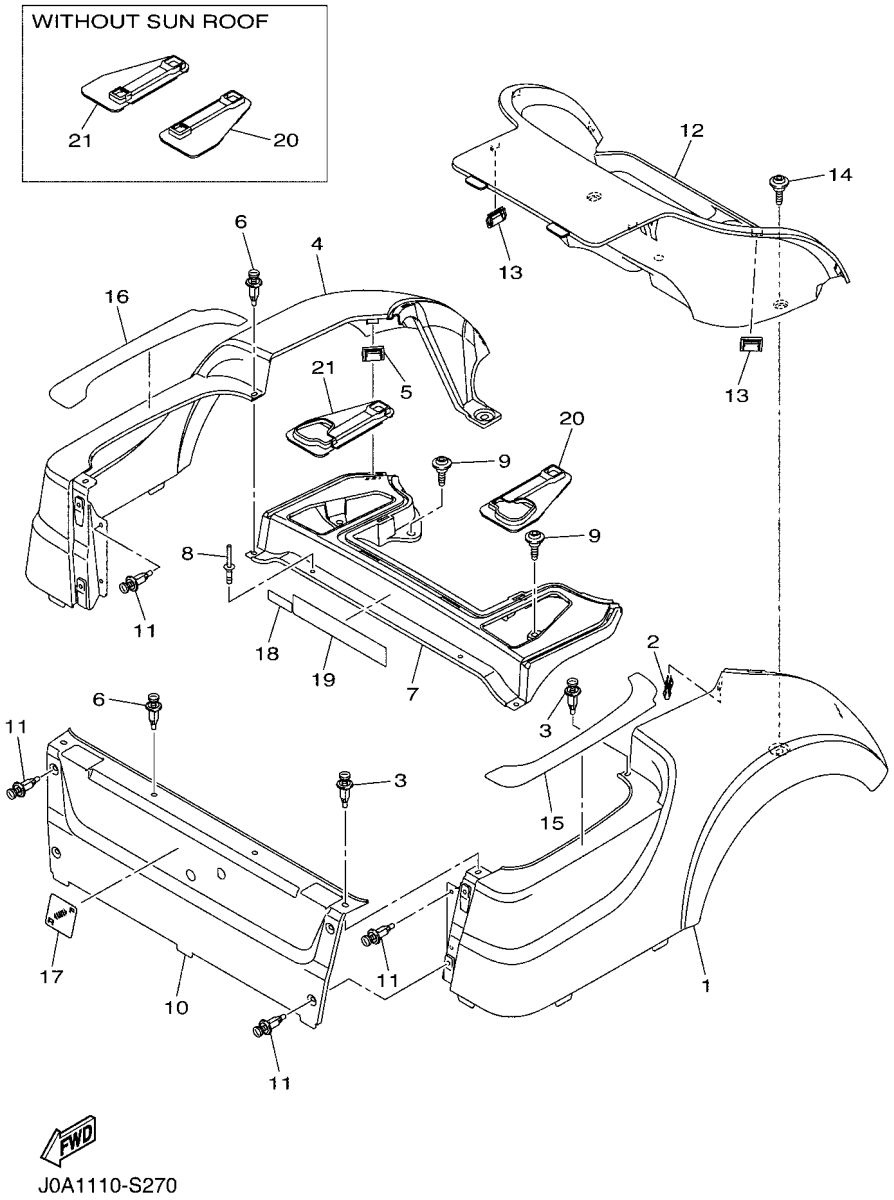

J0A1110-S270

FIG. 28 BODY 2

REF. NO.	PART NO.	DESCRIPTION	J0A1					REMARKS
10	J0B–K8141–00	PANEL, INTERMEDIATE BODY	1					UR FOR DNBME
	J0B–K8141–20	PANEL, INTERMEDIATE BODY	1					UR FOR LNYM8
	J0B–K8141–30	PANEL, INTERMEDIATE BODY	1					UR FOR LNMP
	J0B–K8141–40	PANEL, INTERMEDIATE BODY	1					UR FOR DYNM2
	J0B–K8141–B0	PANEL, INTERMEDIATE BODY	1					UR FOR NYS4
	J0B–K8141–50	PANEL, INTERMEDIATE BODY	1					UR FOR HTR
	J0B–K8141–60	PANEL, INTERMEDIATE BODY	1					UR FOR DNMC
11	90269–07803	RIVET	8					
12	J0B–K8237–01	COVER, REAR FLOOR	1					
13	J0B–F3447–00	CLIP	4					
14	J0B–F1738–00	BOLT	2					
15	J0B–F2873–01	SEAL 1	1					
16	J0B–F2874–01	SEAL 2	1					
17	JW1–K7741–00	INDICATOR 1	1					
18	JN6–H2377–00	LABEL	1					
19	JW1–K8297–02	PLATE, CAUTION 1	1					UR FOR CAN
	JW1–K8297–11	PLATE, CAUTION 1	1					UR EXCEPT FOR CAN
20	J0B–K817H–10	TRIM, SIDE PANEL 1	1					WITH SUN ROOF
	J0B–K817H–00	TRIM, SIDE PANEL 1	1					WITHOUT SUN ROOF
21	J0B–K817J–10	TRIM, SIDE PANEL 2	1					WITH SUN ROOF
	J0B–K817J–00	TRIM, SIDE PANEL 2	1					WITHOUT SUN ROOF

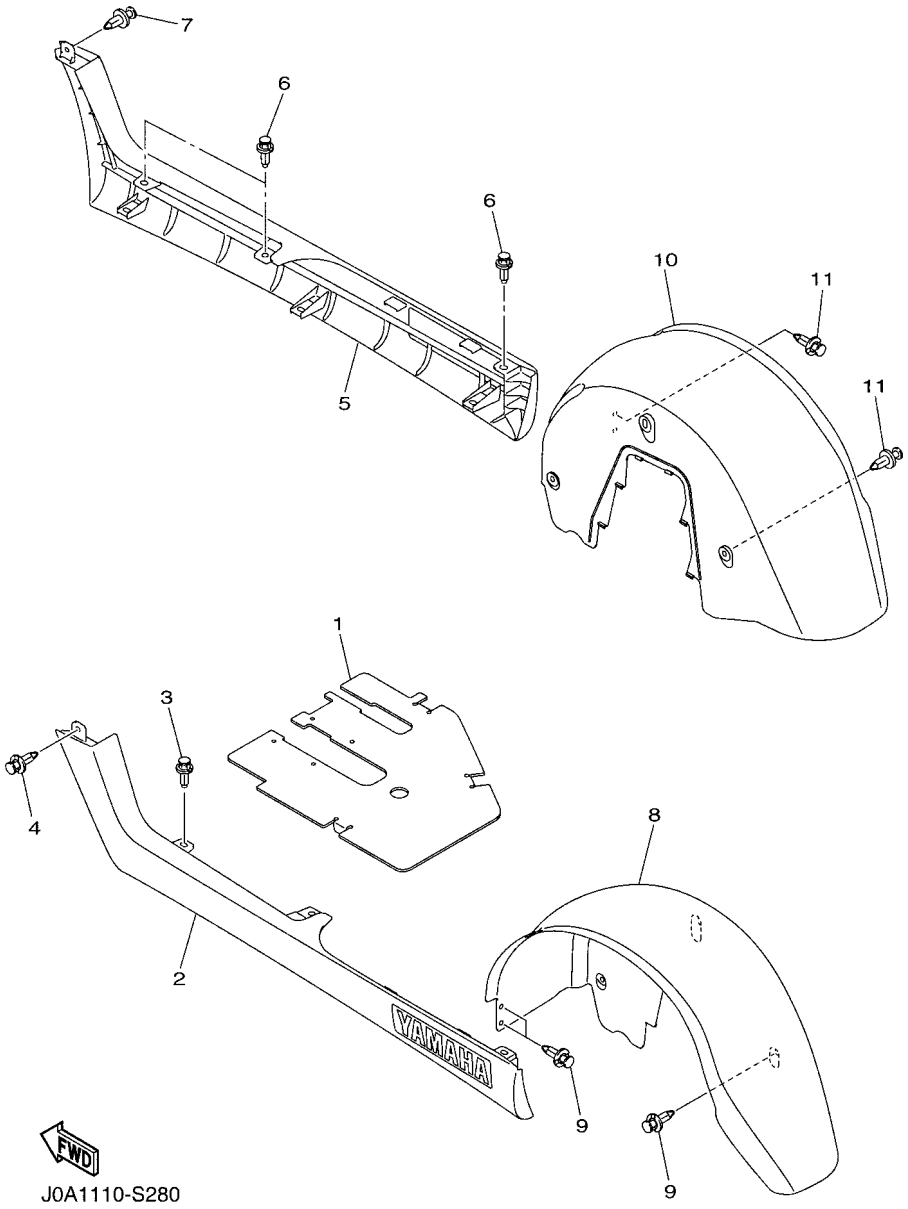

FIG. 29 BODY FITTING

REF. NO.	PART NO.	DESCRIPTION	J0A1					REMARKS
1	J0B–K8271–00	SERVICE LID, PEDAL	1					
2	J0B–K818A–00	PROTECTOR, SIDE PLATE	1					
3	90269–09003	RIVET	3					
4	90269–06804	RIVET	1					
5	J0B–K818B–00	PROTECTOR, SIDE PLATE 2	1					
6	90269–09003	RIVET	3					
7	90269–06804	RIVET	1					
8	J0B–K8191–00	PANEL, REAR FENDER 1	1					
9	90269–06804	RIVET	5					
10	J0B–K8192–00	PANEL, REAR FENDER 2	1					
11	90269–06804	RIVET	5					

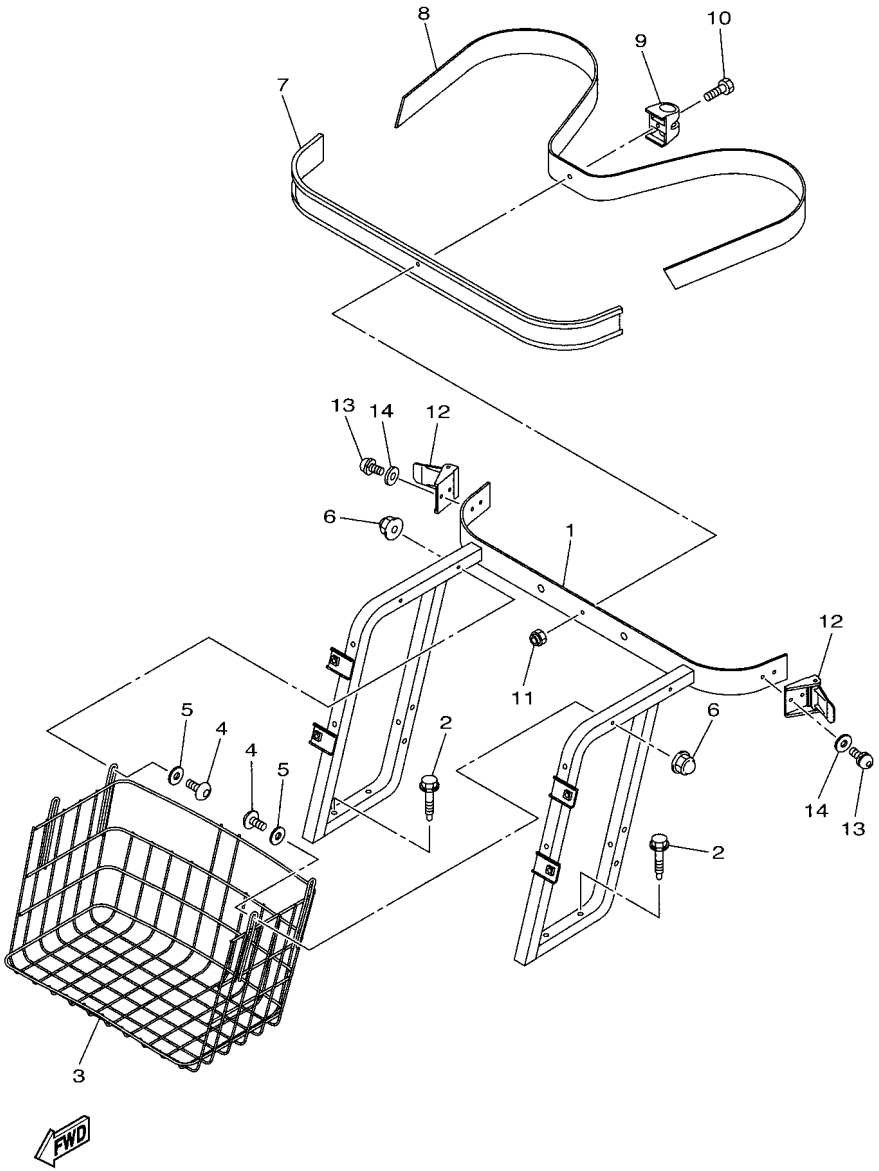

J0B1110-S280

FIG. 30 CARRIER

REF. NO.	PART NO.	DESCRIPTION	J0A1					REMARKS
1	J0B–K8423–00	SUPPORT, SEAT BACK	1					
2	90109–08002	BOLT	4					
3	JW1–K8340–00	LUGGAGE RACK ASSY., REAR	1					
4	92017–06040	BOLT, BUTTON HEAD	4					
5	J0B–K7389–00	WASHER	4					
6	90176–06008	NUT, CROWN	4					
7	JF2–K8356–00	PAD, BAG SUPPORT	1					
8	JN6–K8355–20	BAND	1					
9	JW1–K834G–00	HOLDER, RAKE SAND	1					
10	9708R–06020	BOLT	1					
11	90185–06836	NUT, SELF-LOCKING	1					
12	JN6–K8380–00	LOCK ASSY	2					
13	90159–06845	SCREW, WITH WASHER	4					
14	9299R–06200	WASHER	4					

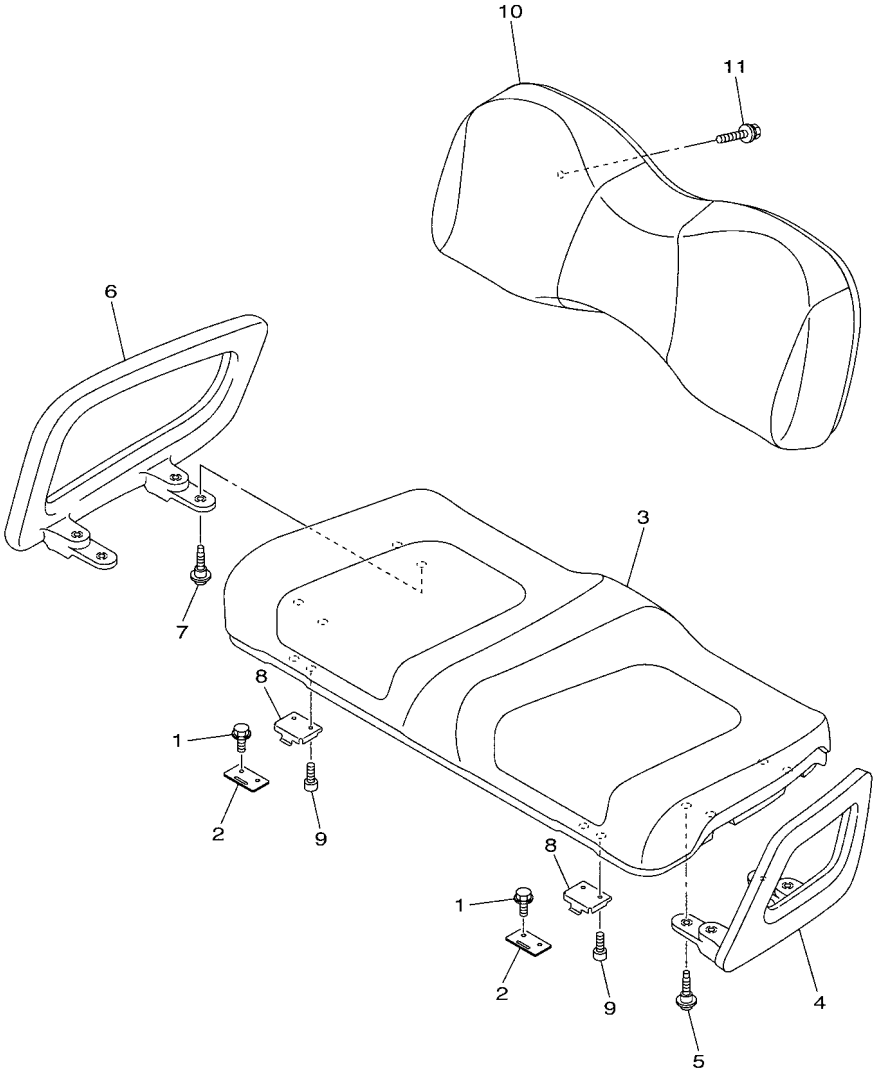

J0B1110-S290

FIG. 31 SEAT

REF. NO.	PART NO.	DESCRIPTION	J0A1					REMARKS
1	JW9–H1674–00	BOLT	4					
2	JW1–K8427–00	HINGE, SEAT 2	2					
3	J0A–K8401–00	SEAT SUB-ASSY,CUSHION	1					
4	J0B–K8361–00	ARM REST 1	1					
5	J0B–F1738–00	BOLT	4					
6	J0B–K8362–00	ARM REST 2	1					
7	J0B–F1738–00	BOLT	4					
8	J0B–K8426–01	HINGE, SEAT 1	2					
9	90110–06125	BOLT, HEXAGON SOCKET HEAD	4					
10	JW1–K8402–10	SEAT SUB ASSY, BACK	1					
11	90119–06808	BOLT, WITH WASHER	4					

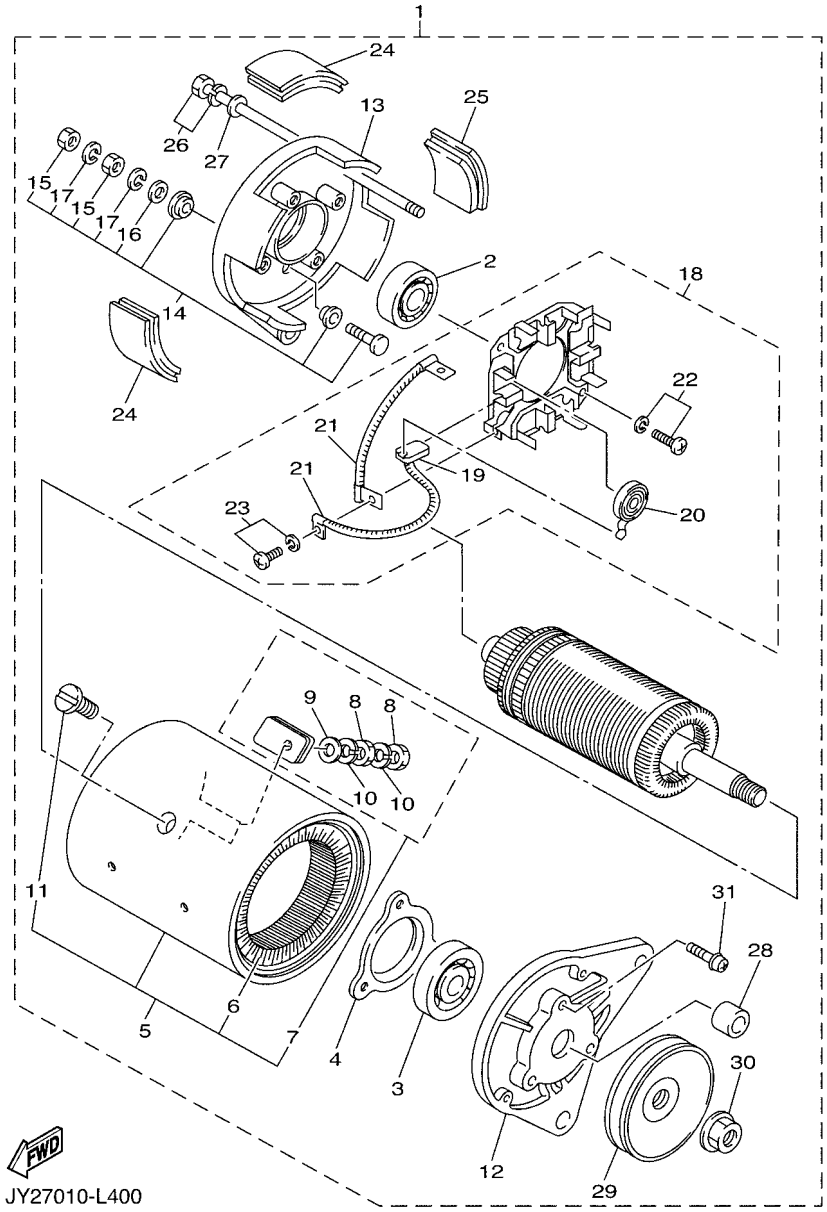

FIG. 32 STARTING MOTOR

REF. NO.	PART NO.	DESCRIPTION	J0A1					REMARKS
1	JN6–H1100–04	STARTER GENERATOR ASSY	1					
2	J10–H1157–10	.BEARING 1	1					
3	J10–H1158–10	.BEARING 2	1					
4	J10–81159–10	.HOLDER, BEARING	1					
5	JN6–H1110–10	.STATOR ASSY	1					
6	JN6–H1160–10	..FIELD COIL ASSY	1					
7	J10–81148–10	..SCREW SET 4	2					
8	9530N–06600	...NUT,HEX	2					
9	9290N–06600	...WASHER	1					
10	92907–06100	...WASHER, SPRING	2					
11	J10–81146–10	..SCREW 2	4					
12	JN6–H1165–00	.BRACKET, STARTER GENERATOR 1	1					
13	J10–H1166–10	.BRACKET, STARTER GENERATOR 2	1					
14	J10–81147–10	.SCREW SET 3	2					
15	9530N–06600	..NUT,HEX	2					
16	9290N–06600	..WASHER	1					
17	92907–06100	..WASHER, SPRING	2					
18	JN6–H1119–00	.BRUSH HOLDER ASSY	1					
19	JF2–H1111–00	..BRUSH	4					
20	JN6–H1113–00	..SPRING, BRUSH	4					
21	J10–81115–10	..WIRE, LEAD	2					
22	9850N–05016	..SCREW, PAN HEAD	2					
23	9850N–04010	..SCREW, PAN HEAD	4					
24	J10–81129–10	.COVER, BRUSH	3					
25	J10–81139–10	.COVER, BRUSH 2	1					
26	J10–H1145–10	.SCREW 1	2					
27	9290N–06600	.WASHER	2					

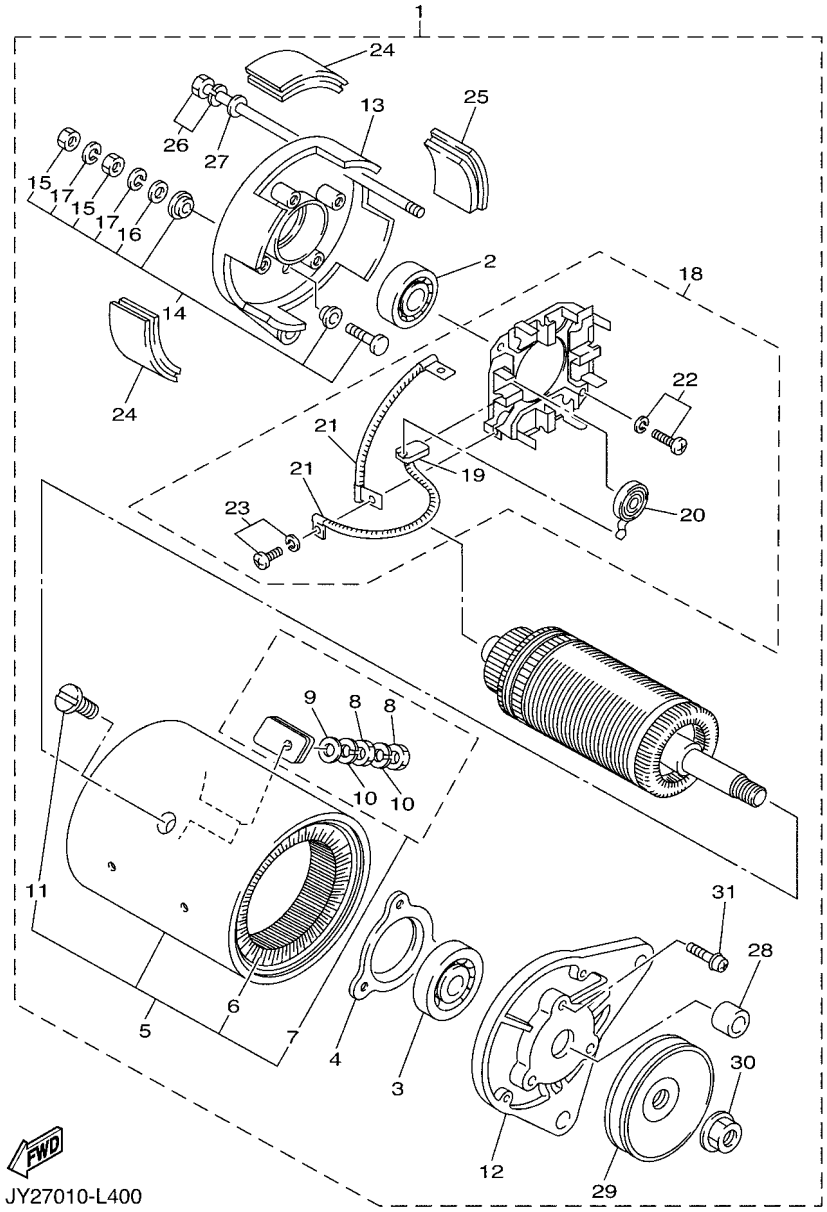

FIG. 32 STARTING MOTOR

REF. NO.	PART NO.	DESCRIPTION	J0A1					REMARKS
28	JN3–H1661–00	.SPACER	1					
29	JN6–H1161–00	.PULLEY	1					
30	90179–16889	.NUT	1					
31	9850N–05018	.SCREW, PAN HEAD	3					

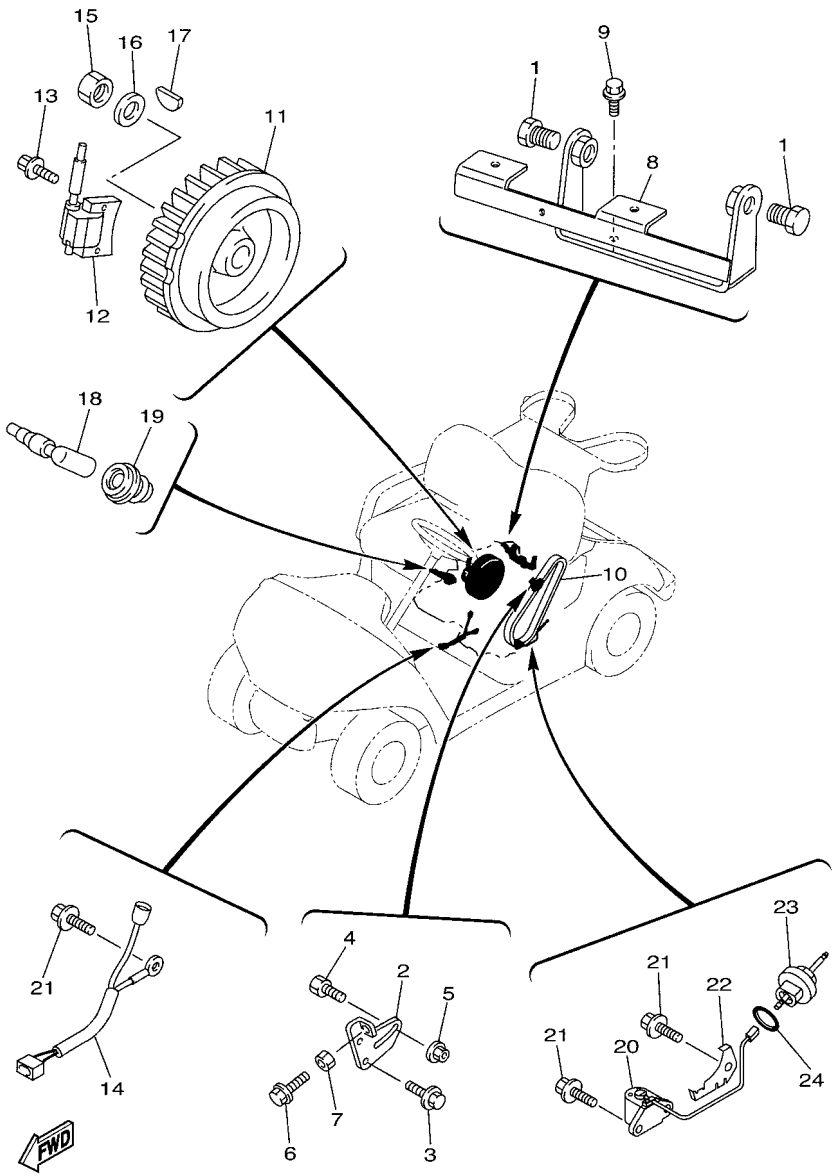

J0A1110-S320

FIG. 33 ELECTRICAL 1

REF. NO.	PART NO.	DESCRIPTION	J0A1					REMARKS
1	95812–12030	BOLT, FLANGE	2					
2	JW1–H1170–11	TENSIONER ASSY	1					
3	95822–08020	BOLT, FLANGE	2					
4	90109–08827	BOLT	1					
5	95702–08500	NUT, FLANGE	1					
6	92012–06030	BOLT, BUTTON HEAD	1					
7	95302–06600	NUT, HEXAGON	1					
8	JN6–H1171–11	BRACKET, STARTER GENERATOR	1					
9	95822–08020	BOLT, FLANGE	2					
10	JW1–H1173–02	BELT	1					
11	JR7–85650–00	ROTOR ASSY	1					
12	JN6–85640–01	T.C.I. UNIT ASSY	1					
13	95822–06025	BOLT, FLANGE	2					
14	JN6–82318–00	WIRE, SUB-LEAD	1					
15	95302–18600	NUT, HEXAGON	1					
16	90201–18620	WASHER, PLATE	1					
17	90280–04052	KEY, WOODRUFF	1					
18	JN6–82370–00	PLUG CAP ASSY	1					
19	JE8–82372–00	SEAL, PLUG CAP	1					
20	JT0–85720–00	OIL LEVEL GAUGE ASSY	1					
21	95822–06012	BOLT, FLANGE	4					
22	JT0–85724–00	CLAMP	1					
23	JT0–15362–00	PLUG, OIL LEVEL	1					
24	93210–15566	O-RING	1					

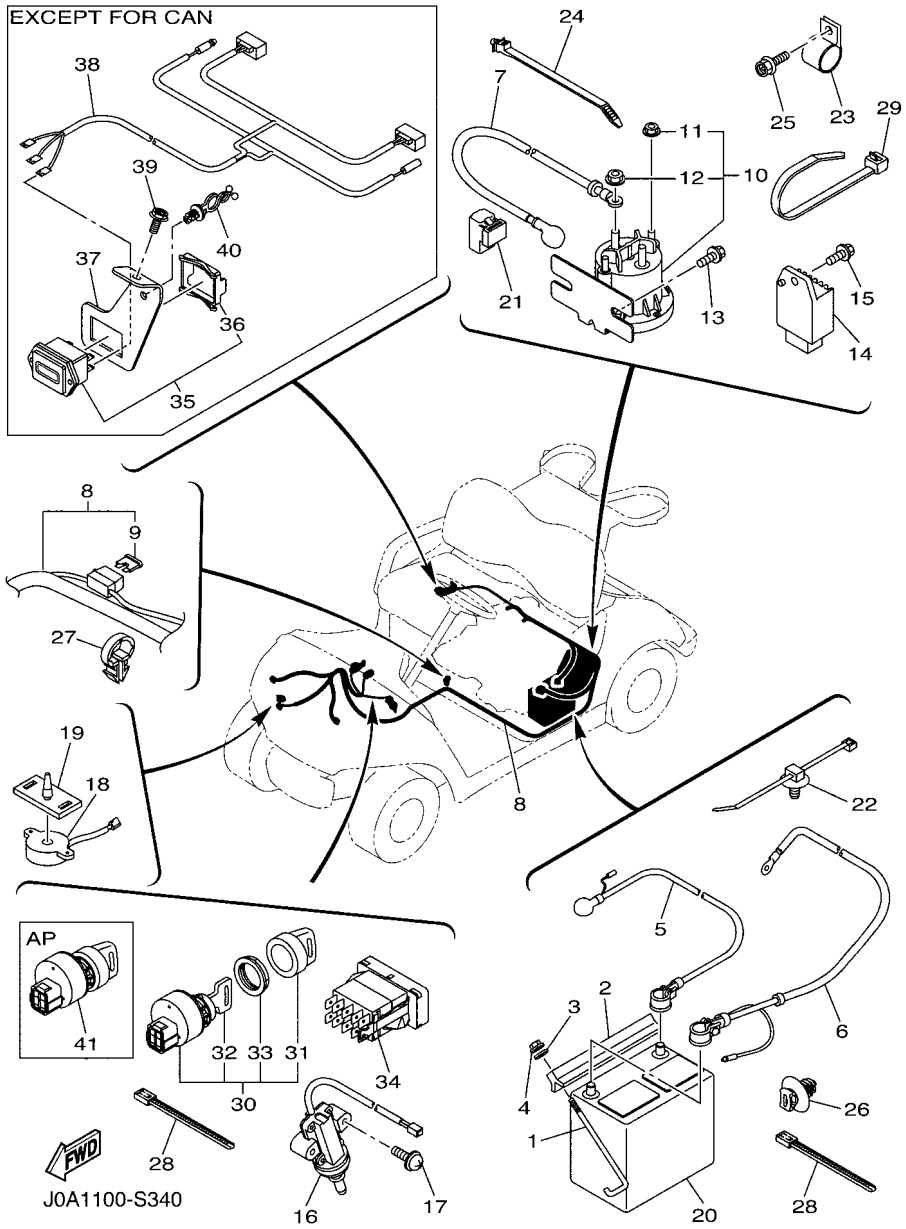

FIG. 34 ELECTRICAL 2

REF. NO.	PART NO.	DESCRIPTION	J0A1					REMARKS
1	JW1–H2133–00	SCREW, FITTING	2					
2	J55–H2136–00	PLATE, BATTERY FITTING	1					
3	92902–06200	WASHER	2					
4	95702–06500	NUT, FLANGE	2					
5	JW1–H2115–01	WIRE, PLUS LEAD	1					
6	JW1–H2116–02	WIRE, MINUS LEAD	1					
7	JW1–H2117–01	WIRE, LEAD	1					
8	J0A–H2590–00	WIRE HARNESS ASSY	1					
9	JN6–H2151–00	.FUSE (10A)	1					
10	JW1–H1950–00	RELAY ASSY	1					
11	90179–05807	.NUT	2					
12	90179–08824	.NUT	2					
13	90105–06831	BOLT, FLANGE	2					
14	JF2–81910–10	VOLTAGE REGULATOR ASSY	1					
15	90105–06870	BOLT, FLANGE	1					
16	JF7–82817–22	SWITCH	1					
17	97602–05225	SCREW, PAN HEAD WITH WASHER	2					
18	JR1–H3383–02	BUZZER	1					
19	JN6–H3386–01	STAY, BUZZER	1					
20	*	BATTERY ASSY (GC-24, 12V)	1					LM
21	4U8–81950–02	RELAY ASSY (4U8-02)	1					
22	1NS–F1338–00	CLAMP	4					
23	90461–14108	CLAMP	1					
24	90464–09823	CLAMP	1					
25	90105–08867	BOLT, FLANGE	1					
26	5UG–F2465–10	HOLDER	1					
27	90464–19815	CLAMP	1					

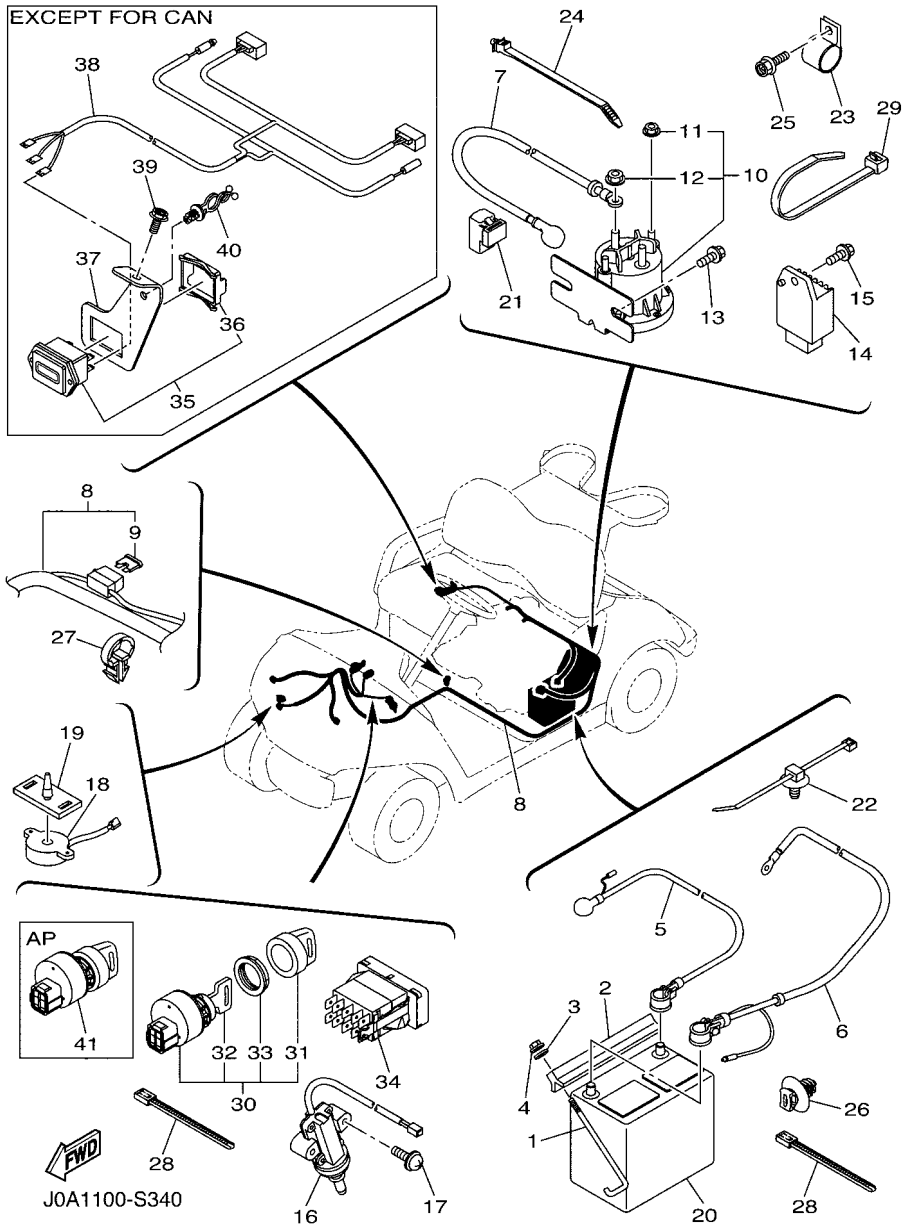

FIG. 34 ELECTRICAL 2

REF. NO.	PART NO.	DESCRIPTION	J0A1					REMARKS
28	90464–40825	CLAMP	3					
29	90464–76800	CLAMP	1					
30	JW1–H2510–00	MAIN SWITCH ASSY	1					STD
31	5UG–H2579–00	.CAP, KEY	1					
32	JU2–H2511–00	.KEY, MAIN SWITCH	2					
33	JU6–H2569–00	.NUT, MAIN SWITCH	1					
34	JW8–H3530–00	PILOT LIGHT ASSY	1					
35	JN6–H351C–10	GAUGE 1	1					EXCEPT FOR CAN
36	JW1–H1128–00	.CLAMP	1					EXCEPT FOR CAN
37	JW1–F4881–00	BRKT., METER	1					EXCEPT FOR CAN
38	JW1–H2386–10	EXTENSION, WIRE HARNESS	1					EXCEPT FOR CAN
39	90105–06831	BOLT, FLANGE	1					EXCEPT FOR CAN
40	90464–12836	CLAMP	1					EXCEPT FOR CAN
41	JU2–H2510–20	MAIN SWITCH ASSY	1					AP RANDOMEKEY

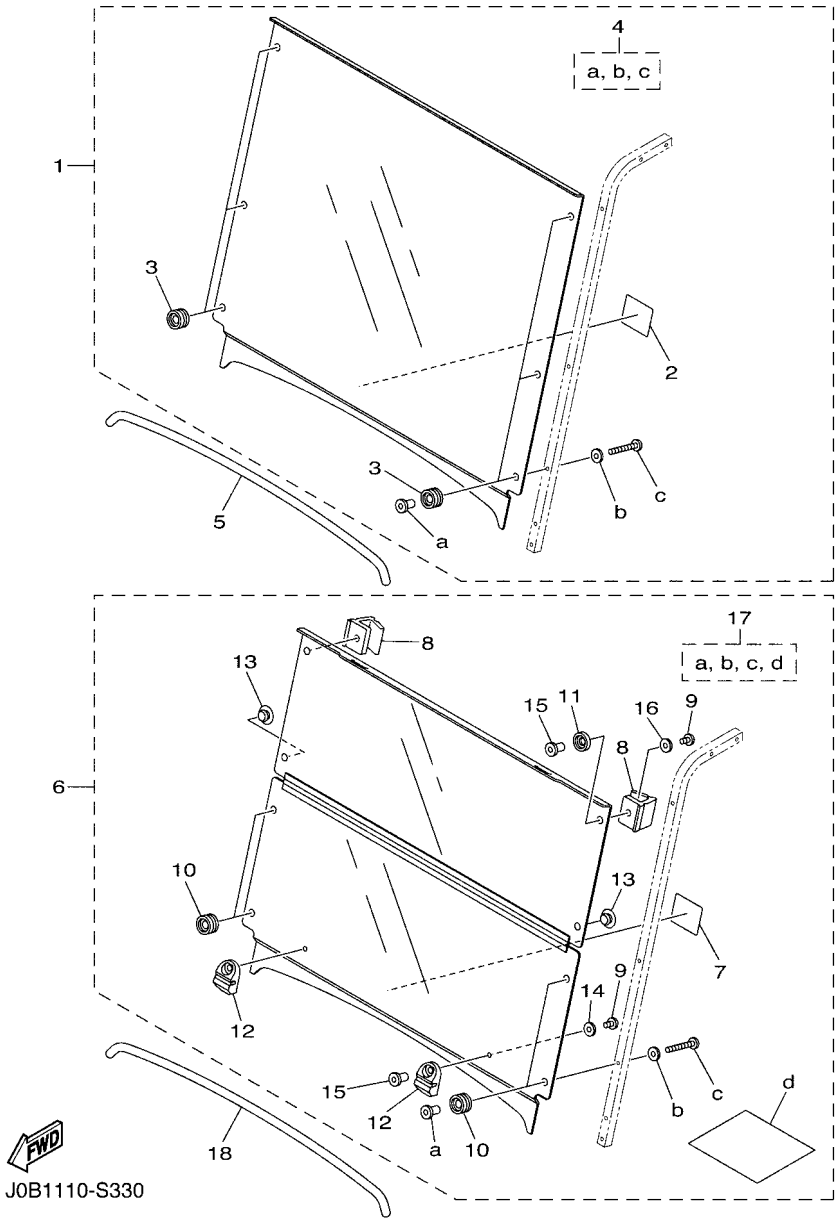

FIG. 35 ALTERNATE FOR WINDSHIELD

REF. NO.	PART NO.	DESCRIPTION	J0A1					REMARKS
1	J0B–K7200–00	WINDSHIELD ASSY	1					UR CLEAR
	J0B–K7200–10	WINDSHIELD ASSY	1					UR SMOKE
2	J0B–K7458–00	.LABEL, WARNING	1					
3	J0B–K7237–00	.GROMMET	6					
4	J0B–K7240–00	.WIND SHIELD HARDWARE KIT 1	1					
5	J0B–K7213–00	TRIM, UPPER	1					
6	J0B–K7200–20	WINDSHIELD ASSY	1					UR CLEAR
	J0B–K7200–30	WINDSHIELD ASSY	1					UR SMOKE
7	J0B–K7458–00	.LABEL, WARNING	1					
8	J0B–K7173–20	.LEVER, LATCH 1	2					
9	J0B–K7258–00	.SCREW, 2	4					
10	J0B–K7237–00	.GROMMET	2					
11	J0B–K7247–00	.GROMMET, W/S 2	2					
12	J0B–K7257–00	.GROMMET, W/S 3	2					
13	J0B–K7238–00	.DAMPER	2					
14	J0B–K7218–00	.WASHER 1	2					
15	J0B–K7217–00	.NUT, WIND SHIELD	4					
16	J0B–K7219–00	.WASHER 2	2					
17	J0B–K7240–20	.WIND SHIELD HARDWARE KIT 1	1					
18	J0B–K7213–00	TRIM, UPPER	1					

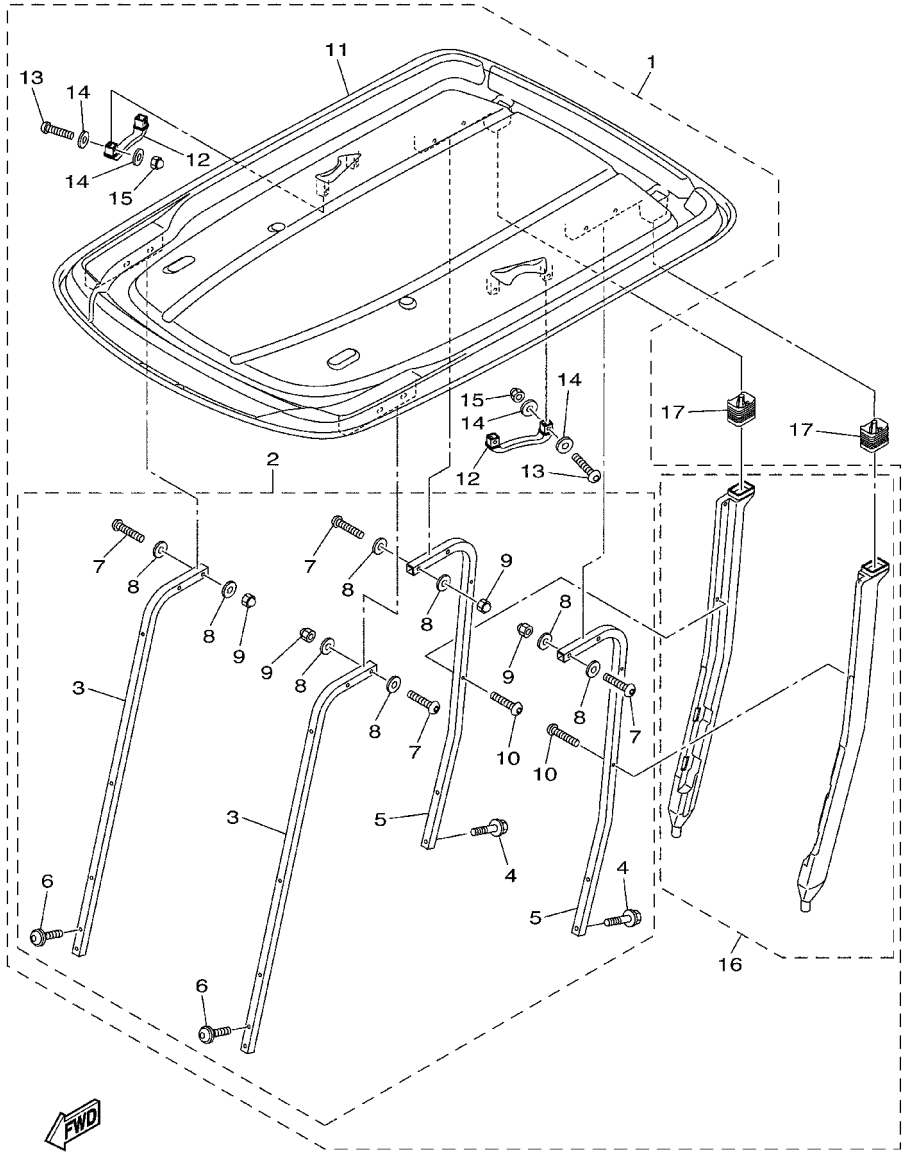

J1B1400-S151

FIG. 36 ALTERNATE FOR SUN ROOF

REF. NO.	PART NO.	DESCRIPTION	J0A1					REMARKS
1	J0B–K84A0–00	SUN TOP KIT	1					UR AP TAN
	J0B–K84A0–10	SUN TOP KIT	1					UR AP BLACK
2	J0B–K84A2–00	.HARDWARE KIT, SUN TOP	1					
3	J0B–K8312–00	..SUPPORT, SUN ROOF 1	2					
4	JW1–K8388–00	..BOLT, ROOF 1	4					
5	JW1–K8313–01	..SUPPORT, SUN ROOF 2	2					
6	J0B–K8388–00	..BOLT, ROOF 1	4					
7	JU0–K8388–00	..BOLT, ROOF 1	8					
8	JW1–F1549–01	..WASHER, FENDER MOLD	16					
9	JU0–K8398–00	..NUT, ROOF 1	8					
10	JW1–K7387–00	..SCREW	4					
11	JW1–K8314–10	.COVER, SUN ROOF	1					UR TAN
	JW1–K8314–20	.COVER, SUN ROOF	1					UR BLACK
12	JW1–K8214–00	.GRIP, HAND	2					
13	JU0–K8388–00	.BOLT, ROOF 1	4					
14	JW1–F1549–01	.WASHER, FENDER MOLD	8					
15	JU0–K8398–00	.NUT, ROOF 1	4					
16	J0B–F417A–00	.DRAIN TUBE ASSY	1					
17	JW1–F414G–10	SEAL	2					

PART NO.	REF. NO.
JT0–11111–00	2 – 1
JN6–11116–00	2 – 10
JN6–11133–10	2 – 2
JR7–11163–10	2 – 18
JN6–11168–00	2 – 11
JN6–11169–00	2 – 12
JT0–11181–00	2 – 3
JN6–11191–01	2 – 9
JN6–11193–00	2 – 13
812–11198–00	9 – 10
JN6–11400–00	3 – 1
JN6–11454–10	3 – 8
JR7–11610–00	3 – 3
JR7–11610–10	3 – 3
JR7–11610–20	3 – 3
JR7–11631–00–A0	3 – 2
583–11633–00	3 – 4
JR7–11635–00	3 – 2
JR7–11636–00	3 – 2
JN6–11650–10	3 – 6
JN6–11654–10	3 – 7
JN6–12111–10	4 – 2
J38–12117–01	4 – 6
J38–12118–00	4 – 7
4G0–12119–00	4 – 13
7RH–12121–10	4 – 3
JN6–12151–10	4 – 8
JN6–12153–10	4 – 4
JR7–12154–10	4 – 12
J38–12156–20	4 – 11
22F–12159–10	4 – 9
JR7–12170–00	4 – 1
JN6–12616–00	5 – 3
JN6–12621–02	5 – 1
JR7–12634–00	5 – 11
JN6–12651–01	5 – 5
JN6–12652–00	5 – 7
JR7–12658–00	5 – 6
JX4–12691–00	5 – 9
JN6–13567–00	6 – 3
JN6–13595–00	6 – 1
JR6–14101–02	7 – 1
732–14142–65–A0	7 – 6
73A–1414G–00	7 – 8
JN5–14150–00	7 – 14
7R1–14162–00	7 – 13
JN6–14185–00	7 – 11
22F–14186–00	7 – 15

PART NO.	REF. NO.
7E1–14191–00	7 – 20
1KT–14197–01	7 – 22
127–14198–00	7 – 12
73A–14212–00	7 – 21
73A–14212–10	7 – 17
J10–14227–00	7 – 5
3G2–1423A–67	7 – 9
3G2–1423A–68–A0	7 – 9
3G2–1423E–33–A0	7 – 9
JN6–14291–00	7 – 4
7KY–14613–01	8 – 3
1WG–14922–00	7 – 16
JN6–1495H–3B	7 – 7
JR7–15100–03	9 – 1
JR7–15123–00	9 – 4
JN6–15155–10	9 – 2
J38–15361–00	9 – 22
JT0–15362–00	33 – 23
796–15363–01	9 – 20
JN6–15411–01	9 – 12
JY2–15451–00	9 – 16
JR6–19001–00	1 – 1
JT0–21481–00	10 – 3
401–22128–01	13 – 16
2NL–23448–00	13 – 9
2NL–23517–00	13 – 11
2HR–23526–00	13 – 3
JW8–23841–01	14 – 27
4WM–24180–00	15 – 21
J38–27204–00	19 – 15
J38–27205–00	19 – 4
J55–27260–00	19 – 9
J55–27270–00	19 – 20
J10–27282–00	19 – 6
	19 – 17
J38–27951–00	20 – 1
J38–27959–00	20 – 5
B88–2817K–00	15 – 7
	16 – 5
J10–81115–10	32 – 21
J10–81129–10	32 – 24
J10–81139–10	32 – 25
J10–81146–10	32 – 11
J10–81147–10	32 – 14
J10–81148–10	32 – 7
J10–81159–10	32 – 4
JF2–81910–10	34 – 14
4U8–81950–02	34 – 21

PART NO.	REF. NO.
JN6–82318–00	33 – 14
JN6–82370–00	33 – 18
JN6–82370–00	33 – 19
JN3–82617–01	24 – 17
JF7–82817–22	34 – 16
JN6–85640–01	33 – 12
JR7–85650–00	33 – 11
JT0–85720–00	33 – 20
JT0–85724–00	33 – 22
JW1–E1116–00	2 – 16
JN6–E1166–00	2 – 20
JW1–E1166–00	2 – 15
JU0–E3505–09	6 – 14
JU0–E4411–00	6 – 10
JU0–E4412–00	6 – 11
5UH–E4424–00	6 – 17
JU0–E4450–00	6 – 12
JU0–E445E–00	6 – 13
JW8–E4710–01	8 – 1
JW1–E4713–00	8 – 4
7CT–E4997–00	7 – 10
JW1–E5407–00	9 – 3
JW8–E7688–00	22 – 7
J0B–F125J–00	12 – 15
1NS–F1338–00	34 – 22
JW8–F135J–00	21 – 7
	22 – 4
JW8–F1436–00	8 – 2
JW1–F1549–01	36 – 8
	36 – 14
J0B–F1738–00	12 – 6
	12 – 7
	12 – 8
	28 – 9
	28 – 14
	31 – 5
	31 – 7
JW1–F1738–00	15 – 8
	16 – 6
J0A–F2110–00	11 – 1
JN6–F2123–10	11 – 2
JN6–F2124–10	11 – 6
J0B–F2127–00	12 – 11
JW1–F217G–10	11 – 10
J0A–F2210–00	11 – 12
5UG–F2465–10	34 – 26
J0A–F2501–00	12 – 1
JW8–F253B–00	12 – 4

PART NO.	REF. NO.
J0B–F255G–00	12 – 2
J0B–F258E–00	12 – 9
J0B–F2873–01	28 – 15
J0B–F2874–01	28 – 16
JW7–F312H–00	15 – 18
	16 – 16
JW1–F3183–00	14 – 12
JW8–F3183–00	18 – 16
J0A–F3350–00	13 – 14
J0A–F3390–00	13 – 19
JW1–F3394–00	15 – 11
	16 – 9
JW1–F3400–00	14 – 10
J0B–F3447–00	28 – 2
	28 – 5
	28 – 13
5UG–F3489–00	14 – 20
JU0–F3511–10	13 – 4
JW1–F3512–00	13 – 5
JU0–F3521–10	13 – 12
5UG–F3527–00	14 – 21
J0B–F3570–10	13 – 1
JW1–F3811–03	14 – 1
JW1–F3812–00	14 – 13
JW1–F3822–01	14 – 29
JU0–F3828–10	14 – 4
1P0–F3833–00	14 – 26
JW1–F3837–00	14 – 22
JN3–F3838–00	14 – 6
5UG–F3844–00	14 – 19
JU0–F3857–11	14 – 3
	14 – 5
JW1–F3866–00	14 – 24
JW1–F387A–00	14 – 11
JW1–F387E–00	14 – 14
5UG–F387F–00	14 – 17
5UG–F387G–00	14 – 15
5UG–F387J–00	14 – 18
5UG–F387K–00	14 – 16
JW1–F3894–00	14 – 25
JW8–F4111–20	15 – 1
JW8–F4111–30	16 – 1
JW1–F4112–00	15 – 5
J0B–F413G–00	36 – 17
J0B–F413J–00	36 – 18
JW1–F414G–10	36 – 19
J0B–F4161–00	27 – 2
7CC–F4170–01	15 – 20

PART NO.	REF. NO.
J0B–F417A–00	36 – 16
J0B–F419A–00	15 – 26
JW1–F4300–10	15 – 2
	16 – 2
JW1–F4311–00	15 – 14
	16 – 12
JW7–F4311–00	15 – 12
	16 – 10
JW1–F4313–01	15 – 15
	16 – 13
J0B–F4314–00	15 – 23
JW1–F4314–00	15 – 16
	16 – 14
J0B–F4316–00	15 – 24
JW1–F4317–00	15 – 25
JU5–F4375–00	15 – 3
	15 – 6
	16 – 3
JN6–F4410–11	15 – 10
	16 – 8
JW8–F4486–00	18 – 44
	18 – 48
JN6–F4560–00	15 – 13
	16 – 11
JN6–F4610–00	16 – 4
JW1–F4610–00	15 – 4
JW1–F467K–00	14 – 23
JW8–F47E3–00	23 – 20
JW1–F4881–00	34 – 37
JW1–F5100–01	25 – 1
JW8–F5103–00	13 – 21
JW8–F5118–00	23 – 61
JN6–F5118–01	13 – 29
JW8–F5415–00	18 – 25
JW9–F5666–00	18 – 12
JW9–F5671–00	18 – 5
JW9–F5672–00	18 – 4
JW9–F5673–00	18 – 45
JW8–F5681–10	17 – 5
JN6–F5685–01	17 – 6
JW8–F6311–20	18 – 50
JW8–F6312–21	6 – 18
JW8–F6314–00	18 – 21
JW1–F6331–01	6 – 19
JU0–F6333–00	6 – 20
JW8–F6341–10	17 – 1
JW8–F6351–10	17 – 2
JW8–F639L–00	18 – 22

PART NO.	REF. NO.
JW8–F639N–00	18 – 9
JW8–F7113–00	18 – 11
JW8–F7117–00	18 – 6
JW8–F7118–00	18 – 41
JW8–F7119–00	18 – 28
JW8–F7121–00	18 – 13
JW9–F7200–21	18 – 2
JW8–F7213–20	18 – 34
JW8–F7217–00	18 – 32
JW8–F7218–00	18 – 10
JW9–F7221–00	18 – 14
JW9–F7228–00	18 – 23
JU0–F722H–00	23 – 6
JW9–F7231–10	18 – 18
JW9–F7232–00	18 – 19
JU0–F723F–00	23 – 37
JW9–F7245–10	18 – 30
JW9–F7246–20	18 – 46
JW8–F7280–00	19 – 13
JW8–F7281–00	19 – 5
	19 – 16
JW8–F7286–00	19 – 10
	19 – 21
JW8–F7290–00	19 – 2
JW8–F7316–01	18 – 31
JW8–F7317–00	18 – 40
JW8–F7318–00	18 – 20
JW8–F7322–00	18 – 15
J0A–F7411–00	12 – 5
JW8–F7416–00	18 – 8
JW8–F7426–01	18 – 17
JW8–F7434–00	18 – 39
JW8–F7438–00	18 – 38
JW8–F7445–31	18 – 33
JW8–F7814–21	18 – 3
	18 – 43
JW8–F7825–01	18 – 27
JW8–F7850–31	18 – 1
JW8–F7853–10	18 – 35
JW9–F7871–10	18 – 36
JW8–F7872–30	18 – 37
JW8–F815H–01	18 – 42
JW8–F8319–00	18 – 29
JW8–F8323–00	18 – 24
JW8–F8331–00	18 – 47
JW8–F8363–00	18 – 7
JW8–G1661–00	23 – 30
JW8–G2181–00	18 – 55

PART NO.	REF. NO.
JW8–G2535–00	23 – 58
JW8–G2536–00	23 – 59
JW8–G2541–00	23 – 62
JW8–G4178–00	23 – 51
JW8–G4189–00	21 – 6
JW8–G5244–00	23 – 52
JW8–G5282–00	21 – 18
JW8–G5378–00	23 – 41
JW8–G5531–00	22 – 9
JW8–G5618–00	21 – 10
	21 – 15
JW8–G5621–00	21 – 16
JW8–G5677–00	22 – 12
JW8–G5697–20	22 – 15
JN3–G6153–00	23 – 26
JW8–G6159–00	22 – 8
JU0–G6164–00	23 – 35
J0B–G6201–01	21 – 1
JW8–G6202–22	22 – 1
JW8–G6205–22	21 – 9
JW8–G6210–01	21 – 2
J0B–G6220–01	21 – 3
J0B–G6231–00	21 – 17
JW8–G6236–20	21 – 12
JW8–G6237–20	21 – 13
J55–G6241–01	21 – 21
JW8–G6249–00	21 – 19
JW8–G624A–00	21 – 4
JW8–G624B–00	22 – 5
JW8–G6251–21	21 – 8
JW8–G6253–00	21 – 5
JW8–G6260–22	22 – 2
JW8–G6270–21	22 – 3
JW8–G6275–10	22 – 11
JW8–G6284–00	22 – 6
J0A–G6300–00	19 – 1
	23 – 1
JW8–G6313–10	23 – 9
JW8–G6314–00	23 – 32
JN3–G6316–00	23 – 23
JU0–G631A–00	23 – 31
JW8–G6320–00	23 – 7
JN3–G6326–00	23 – 24
JN3–G6327–00	23 – 29
JW8–G633E–00	23 – 5
JN3–G633G–00	23 – 25
JN3–G6344–00	23 – 4
JN3–G6355–00	23 – 57

PART NO.	REF. NO.
JN3–G6356–00	23 – 18
JW8–G6371–10	24 – 3
J0B–G6372–00	24 – 15
JW8–G6374–00	22 – 10
JN3–G6376–00	24 – 10
JU0–G6376–00	23 – 11
JN3–G6381–00	24 – 9
J0B–G6382–00	24 – 5
JW8–G6383–10	24 – 4
JW8–G638A–00	23 – 28
JN6–G638E–00	23 – 27
JN6–G6410–00	23 – 54
JN3–G6432–00	23 – 33
JN3–G6511–00	23 – 44
JN3–G6512–00	23 – 45
JW8–G6514–00	23 – 50
JW8–G6521–00	23 – 60
JW8–G6555–00	23 – 10
JW8–G7339–00	21 – 20
JW8–G8330–10	24 – 2
JN6–H1100–04	32 – 1
JN6–H1110–10	32 – 5
JF2–H1111–00	32 – 19
JN6–H1113–00	32 – 20
JN6–H1119–00	32 – 18
JW1–H1128–00	34 – 36
J10–H1145–10	32 – 26
J10–H1157–10	32 – 2
J10–H1158–10	32 – 3
JN6–H1160–10	32 – 6
JN6–H1161–00	32 – 29
JN6–H1165–00	32 – 12
J10–H1166–10	32 – 13
JW1–H1170–11	33 – 2
JN6–H1171–11	33 – 8
JW1–H1173–02	33 – 10
JN3–H1661–00	32 – 28
JW9–H1674–00	31 – 1
JW1–H1950–00	34 – 10
JW1–H2115–01	34 – 5
JW1–H2116–02	34 – 6
JW1–H2117–01	34 – 7
JW1–H2133–00	34 – 1
J55–H2136–00	34 – 2
JN6–H2151–00	34 – 9
J0B–H2370–00	27 – 13
JN6–H2377–00	28 – 18
JW1–H2386–10	34 – 38

PART NO.	REF. NO.
JW1–H2510–00	34 – 30
JU2–H2510–20	34 – 41
JU2–H2510–20	34 – 32
JU6–H2569–00	34 – 33
5UG–H2579–00	34 – 31
J0A–H2590–00	34 – 8
JR1–H3383–02	34 – 18
JN6–H3386–01	34 – 19
JN6–H351C–10	34 – 35
JW8–H3530–00	34 – 34
J0B–K7173–20	35 – 8
J0B–K7200–00	35 – 1
J0B–K7200–10	35 – 1
J0B–K7200–20	35 – 6
J0B–K7200–30	35 – 6
J0B–K7213–00	35 – 5
	35 – 18
J0B–K7217–00	35 – 15
J0B–K7218–00	35 – 14
J0B–K7219–00	35 – 16
J0B–K7237–00	35 – 3
	35 – 10
J0B–K7238–00	35 – 13
J0B–K7240–00	35 – 4
J0B–K7240–20	35 – 17
J0B–K7247–00	35 – 11
J0B–K7257–00	35 – 12
J0B–K7258–00	35 – 9
JW7–K7329–00	15 – 27
	28 – 8
JW1–K7387–00	36 – 10
J0B–K7389–00	30 – 5
J0B–K7458–00	35 – 2
	35 – 7
J0B–K7510–00	26 – 1
JW8–K7540–00	26 – 7
JU0–K7573–00	27 – 3
JW1–K7741–00	28 – 17
JW8–K7762–00	14 – 38
JW8–K7762–11	14 – 38
JW8–K7762–21	14 – 38
J0B–K7768–00	27 – 8
J0B–K7768–10	27 – 8
J0B–K7768–20	27 – 8
J0B–K8111–00	28 – 1
J0B–K8111–10	28 – 1
J0B–K8111–20	28 – 1
J0B–K8111–30	28 – 1

PART NO.	REF. NO.
J0B–K8111–40	28 – 1
J0B–K8111–50	28 – 1
J0B–K8111–60	28 – 1
J0B–K8111–A0	28 – 1
J0B–K8111–B0	28 – 1
J0B–K8112–00	28 – 4
J0B–K8112–10	28 – 4
J0B–K8112–20	28 – 4
J0B–K8112–30	28 – 4
J0B–K8112–40	28 – 4
J0B–K8112–50	28 – 4
J0B–K8112–60	28 – 4
J0B–K8112–A0	28 – 4
J0B–K8112–B0	28 – 4
J0B–K8114–00	27 – 6
J0B–K8115–00	27 – 1
J0B–K8115–10	27 – 1
J0B–K8115–20	27 – 1
J0B–K8115–30	27 – 1
J0B–K8115–40	27 – 1
J0B–K8115–50	27 – 1
J0B–K8115–60	27 – 1
J0B–K8115–A0	27 – 1
J0B–K8115–B0	27 – 1
J0B–K8141–00	28 – 10
J0B–K8141–10	28 – 10
J0B–K8141–20	28 – 10
J0B–K8141–30	28 – 10
J0B–K8141–40	28 – 10
J0B–K8141–50	28 – 10
J0B–K8141–60	28 – 10
J0B–K8141–A0	28 – 10
J0B–K8141–B0	28 – 10
J0B–K8164–00	26 – 2
J0B–K816M–00	12 – 12
J0B–K817H–00	28 – 20
J0B–K817H–10	28 – 20
J0B–K817J–00	28 – 21
J0B–K817J–10	28 – 21
J0B–K818A–00	29 – 2
J0B–K818B–00	29 – 5
J0B–K8191–00	29 – 8
J0B–K8192–00	29 – 10
J0B–K819H–00	28 – 7
JW1–K8214–00	36 – 12
J0B–K8233–00	27 – 14
J0B–K8237–01	28 – 12
J0B–K8243–00	27 – 17

PART NO.	REF. NO.
J0B–K8244–00	27 – 19
J0B–K8271–00	29 – 1
J0B–K8273–00	27 – 16
J0B–K8282–00	27 – 9
JW1–K8297–02	28 – 19
JW1–K8297–11	28 – 19
J0B–K8312–00	36 – 3
JW1–K8313–01	36 – 5
JW1–K8314–10	36 – 11
JW1–K8314–20	36 – 11
J0B–K832F–00	27 – 21
J0B–K832F–10	27 – 21
J0B–K832G–00	27 – 22
J0B–K832G–10	27 – 22
JW1–K8340–00	30 – 3
JW1–K834G–00	30 – 9
JN6–K8355–20	30 – 8
JF2–K8356–00	30 – 7
JW8–K8357–00	14 – 32
JN6–K8358–01	14 – 33
J0B–K835E–00	27 – 10
J0B–K8361–00	31 – 4
J0B–K8362–00	31 – 6
JN6–K8380–00	30 – 12
J0B–K8388–00	36 – 6
JU0–K8388–00	36 – 7
	36 – 13
JW1–K8388–00	36 – 4
JU0–K8398–00	36 – 9
	36 – 15
J0A–K8401–00	31 – 3
JW1–K8402–10	31 – 10
J0B–K8423–00	30 – 1
J0B–K8426–01	31 – 8
JW1–K8427–00	31 – 2
J0B–K84A0–00	36 – 1
J0B–K84A0–10	36 – 1
J0B–K84A2–00	36 – 2
JN9–W2536–00	19 – 3
	19 – 14
90101–08855	23 – 42
90101–08856	23 – 34
90101–10854	23 – 55
90105–06831	12 – 13
	24 – 16
	27 – 4
	34 – 13
	34 – 39

PART NO.	REF. NO.
90105–06862	6 – 16
90105–06870	34 – 15
90105–08260	22 – 14
90105–08859	23 – 16
90105–08867	12 – 10
	12 – 17
	34 – 25
90105–088B6	12 – 14
90105–10219	13 – 8
90105–10267	13 – 13
	13 – 20
90105–10373	13 – 6
90105–10840	23 – 2
90105–10847	14 – 28
90105–13800	11 – 3
90109–08002	30 – 2
90109–08827	33 – 4
90110–06125	31 – 9
90111–05805	27 – 11
90113–04803	21 – 11
	21 – 14
90113–08803	23 – 12
90114–12806	13 – 22
90119–06808	31 – 11
90119–06884	6 – 4
90119–10044	11 – 5
90159–06107	9 – 5
90159–06845	30 – 13
90170–05302	4 – 10
90170–08841	23 – 43
90170–10840	23 – 56
90176–06008	30 – 6
90179–05807	34 – 11
90179–08822	17 – 7
90179–08824	34 – 12
90179–12262	25 – 2
90179–13800	11 – 4
90179–16889	32 – 30
90183–05008	27 – 12
90185–06836	30 – 11
90185–12008	14 – 7
90201–04810	14 – 35
90201–10057	2 – 5
	9 – 19
90201–121H8	19 – 12
	19 – 23
90201–121H9	19 – 11
	19 – 22

PART NO.	REF. NO.
90201–128S4	11 – 9
90201–178H8	23 – 22
90201–18620	33 – 16
90201–198S7	24 – 12
90201–208H9	23 – 17
90201–208J0	23 – 19
90201–208S8	24 – 11
90202–12807	23 – 39
90208–14801	13 – 27
90209–08018	22 – 13
90249–14129	17 – 9
90269–06804	27 – 5
	29 – 4
	29 – 7
	29 – 9
	29 – 11
90269–07803	27 – 7
	27 – 18
	27 – 20
	28 – 3
	28 – 6
	28 – 11
90269–09003	27 – 15
	29 – 3
	29 – 6
90269–10001	5 – 10
90280–04052	33 – 17
90340–12097	9 – 9
90381–17800	13 – 10
90381–18801	13 – 2
90386–08141	20 – 3
90386–12800	18 – 26
90387–046N7	14 – 37
90387–12016	13 – 15
90387–241M7	13 – 25
90461–14108	34 – 23
90464–09823	34 – 24
90464–12836	15 – 19
	16 – 17
	34 – 40
90464–19815	34 – 27
90464–40825	15 – 22
	34 – 28
90464–76800	12 – 16
	24 – 19
	34 – 29
90465–06038	24 – 18
90467–10846	15 – 17

PART NO.	REF. NO.
90467–10846	16 – 15
90467–13847	2 – 19
90468–10049	6 – 6
	6 – 9
90468–10050	18 – 52
90468–20196	17 – 4
90501–10852	23 – 13
90501–264A9	4 – 5
90502–10013	14 – 36
90506–14001	19 – 8
	19 – 19
90506–20281	19 – 7
	19 – 18
90508–16460	18 – 53
90508–40678	20 – 4
90560–05001	18 – 54
90560–08251	15 – 9
	16 – 7
91402–20012	24 – 8
91490–25015	17 – 12
91490–30030	23 – 46
91702–05010	6 – 5
	6 – 8
91702–05014	18 – 51
91702–06014	24 – 6
91702–08018	17 – 11
91702–10026	17 – 3
92012–06030	33 – 6
92017–06040	30 – 4
92902–04100	7 – 19
92902–06200	34 – 3
92902–06600	24 – 7
92902–08600	14 – 31
92902–10200	10 – 2
92902–12200	14 – 8
92907–06100	32 – 10
	32 – 17
9290N–06600	32 – 9
	32 – 16
	32 – 27
92990–05100	7 – 3
9299R–06200	30 – 14
93101–24822	23 – 47
93102–25868	23 – 15
93102–30083	13 – 26
93102–35014	9 – 7
	9 – 14
93104–11829	23 – 40

PART NO.	REF. NO.
93109–10820	23 – 36
93210–15566	33 – 24
93210–15566	9 – 21
93210–398D6	6 – 15
93306–00440	23 – 49
93306–005Y1	23 – 8
93306–005Y3	13 – 24
93306–007Y0	23 – 53
93306–20201	9 – 8
	9 – 15
93306–204X0	13 – 23
93306–20714	9 – 13
93306–303Y6	23 – 3
93306–30709	9 – 6
93410–12822	23 – 38
93420–44805	23 – 48
93450–21053	3 – 5
93500–06826	23 – 14
93606–10842	23 – 21
94702–00343	2 – 8
94702–00348	2 – 8
95302–06600	33 – 7
95302–08700	26 – 5
95302–18600	33 – 15
95307–08700	17 – 8
9530N–06600	32 – 8
	32 – 15
95380–06600	20 – 2
95602–06200	20 – 6
95602–08100	24 – 1
95602–08200	8 – 5
95602–08710	2 – 17
95602–10200	10 – 1
	11 – 14
	13 – 7
	26 – 8
95602–12200	11 – 8
	14 – 9
95602–14100	13 – 28
95612–12100	13 – 18
95622–08618	2 – 7
95702–06500	34 – 4
95702–08500	6 – 2
	33 – 5
95802–06020	5 – 8
95812–08016	26 – 3
95812–08020	14 – 2
	18 – 49

PART NO.	REF. NO.
95812–08040	12 – 3
95812–08045	9 – 17
95812–08050	26 – 4
95812–10055	11 – 13
95812–12030	33 – 1
95812–12065	11 – 7
95812–12080	13 – 17
95817–06020	5 – 2
95822–06012	26 – 6
	33 – 21
95822–06025	33 – 13
95822–06030	2 – 14
95822–08020	33 – 3
	33 – 9
97012–08030	14 – 30
97012–10050	9 – 18
97012–10070	2 – 4
9708R–06020	30 – 10
97502–08625	8 – 6
97512–10620	11 – 11
97602–04316	24 – 14
97602–05225	34 – 17
97702–40525	14 – 34
97702–60420	5 – 4
98507–04010	7 – 18
98507–05008	7 – 2
9850N–04010	32 – 23
9850N–05016	32 – 22
9850N–05018	32 – 31
99001–07600	6 – 7
99001–09600	17 – 10
99009–19400	24 – 13
99530–08016	9 – 11
99530–14016	2 – 6